EOS4 1654 XH

Order Code: **1310382**

Hand Detection Safety Light Curtain with Automatic/Manual Restart and EDM, Extended Range

Safety level
Type 4 - PL e

Protected height (mm)
1660

Resolution (mm)
40

Max. range (m)
20

Restart
Built-in - User selectable automatic or manual

Functioning system
Emitter / Receiver

Technical Description

Compact Safety Light Curtain: Type 4, SIL 3, SILCL 3, PL e, Cat. 4
Cross Section: 28 x 30 mm
No blind area on one side
Hardware configuration: no programming necessary, easy to install and replace
Connection and configuration through M12 connectors
Unshielded cables up to 100 m can be used to connect the Safety Light Curtain
What's in the Box: Emitter, Receiver and Standard Fastening Brackets

Features

Safety level	Type 4 - PL e
Protected height (mm)	1660
Resolution (mm)	40
Controlled height (mm)	1650
Max. range (m)	20
Restart	Built-in - User selectable automatic or manual
Functioning system	Emitter / Receiver
Safety level (SIL / PL)	Type 4 - SIL 3 - SILCL 3 - PL e - Cat. 4
Operating temperature (°C)	- 20 ... 55
Response time (ms)	8,5
Number of beams	56
Max. length of the connection cables (m)	100
Signalling	LEDs for light curtain's status and diagnostics
Safety output type	2 fail-safe PNP (400 mA at 24 VDC) with protection against short circuit, overload and reverse polarity
Connections	M12 5-pole connector (emitter), M12 8-pole connector (receiver)
MTTFD (ISO13849) years	395
PFHD (IEC 61508)	1,55E-08
Safety outputs	2 OSSD PNP (400 mA at 24 VDC)
Safety functions	Integrated
Detection	Hand

EOS4 1654 XH

Protective enclosures	None
Packaging dimensions HxLxW (mm)	145 x 1770 x 200
Product class	C
Custom tariff	85365019

Electrical data

Power supply (VDC)	24 ± 20%

Mechanical data

Overall height (mm)	1713
Cross section dimensions (mm)	28 x 30
Degree of protection	IP65 - IP67
Fastening	Back slot with set of LE type brackets (included) or to the top and lower end with swivel brackets SFB E (optional)
Gross weight (g)	5131,26

Technical drawings

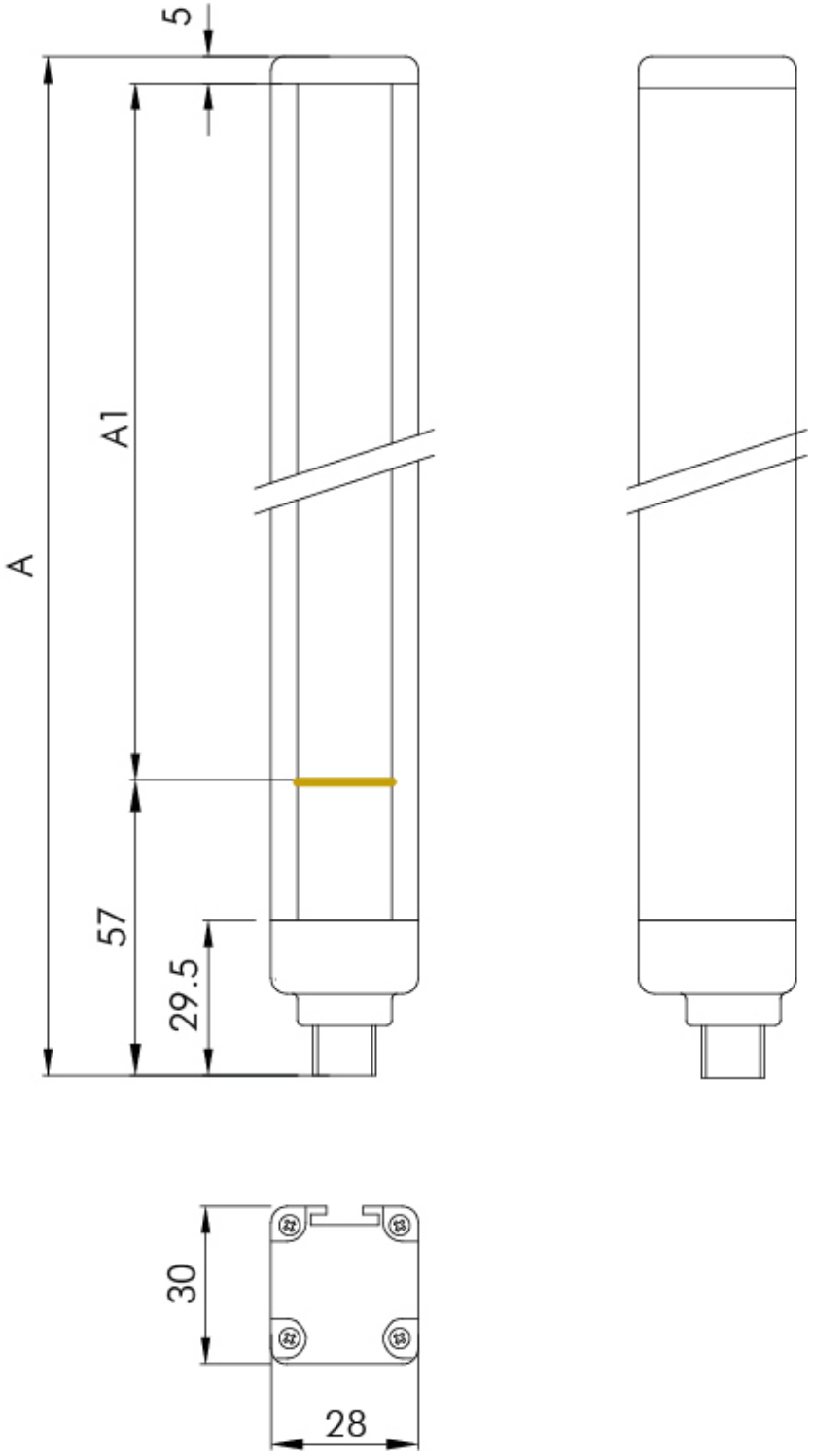

EOS4 1654 XH

Certificates