REER Your future's safe!

EOS2 2B X

Order Code: **1320610**

Access Control Safety Light Grid with Automatic/Manual Restart and EDM

Safety level
Type 2 - PL c

Protected height (mm)
510

Resolution (mm)
Multi-beams

Max. range (m)
12

Restart
Built-in - User selectable automatic or manual

Functioning system
Emitter / Receiver

Technical Description

Compact Safety Light Curtain: Type 2, SIL 1, SILCL 1, PL c, Cat. 2
Cross Section: 28 x 30 mm
No blind area on one side
Hardware configuration: no programming necessary, easy to install and replace
Connection and configuration through M12 connectors
Unshielded cables up to 100 m can be used to connect the Safety Light Curtain
What's in the Box: Emitter, Receiver and Standard Fastening Brackets

Features

Safety level	Type 2 - PL c
Protected height (mm)	510
Resolution (mm)	Multi-beams
Controlled height (mm)	590
Max. range (m)	12
Restart	Built-in - User selectable automatic or manual
Functioning system	Emitter / Receiver
Safety level (SIL / PL)	Type 2 - SIL 1 - SILCL 1 - PL c - Cat. 2
Operating temperature (°C)	- 30 ... 55
Response time (ms)	3
Number of beams	2
Max. length of the connection cables (m)	100 (50 between Master and Slave)
Signalling	LEDs for light curtain's status and diagnostics
Safety output type	2 fail-safe PNP (400 mA at 24 VDC) with protection against short circuit, overload and reverse polarity
Connections	M12 5-pole connector (emitter), M12 8-pole connector (receiver)
MTTFD (ISO13849) years	564,8
PFHD (IEC 61508)	1,72E-08
Safety outputs	2 OSSD PNP (400 mA at 24 VDC)
Safety functions	Integrated
Detection	Access control

EOS2 2B X

Protective enclosures	None
Packaging dimensions HxLxW (mm)	145 x 680 x 200
Product class	C
Custom tariff	85365019

Electrical data

Power supply (VDC)	24 ± 20%

Mechanical data

Overall height (mm)	653
Cross section dimensions (mm)	28 x 30
Degree of protection	IP65 - IP67
Fastening	Back slot with set of LE type brackets (included) or to the top and lower end with swivel brackets SFB E (optional)
Gross weight (g)	2063,36

Technical drawings

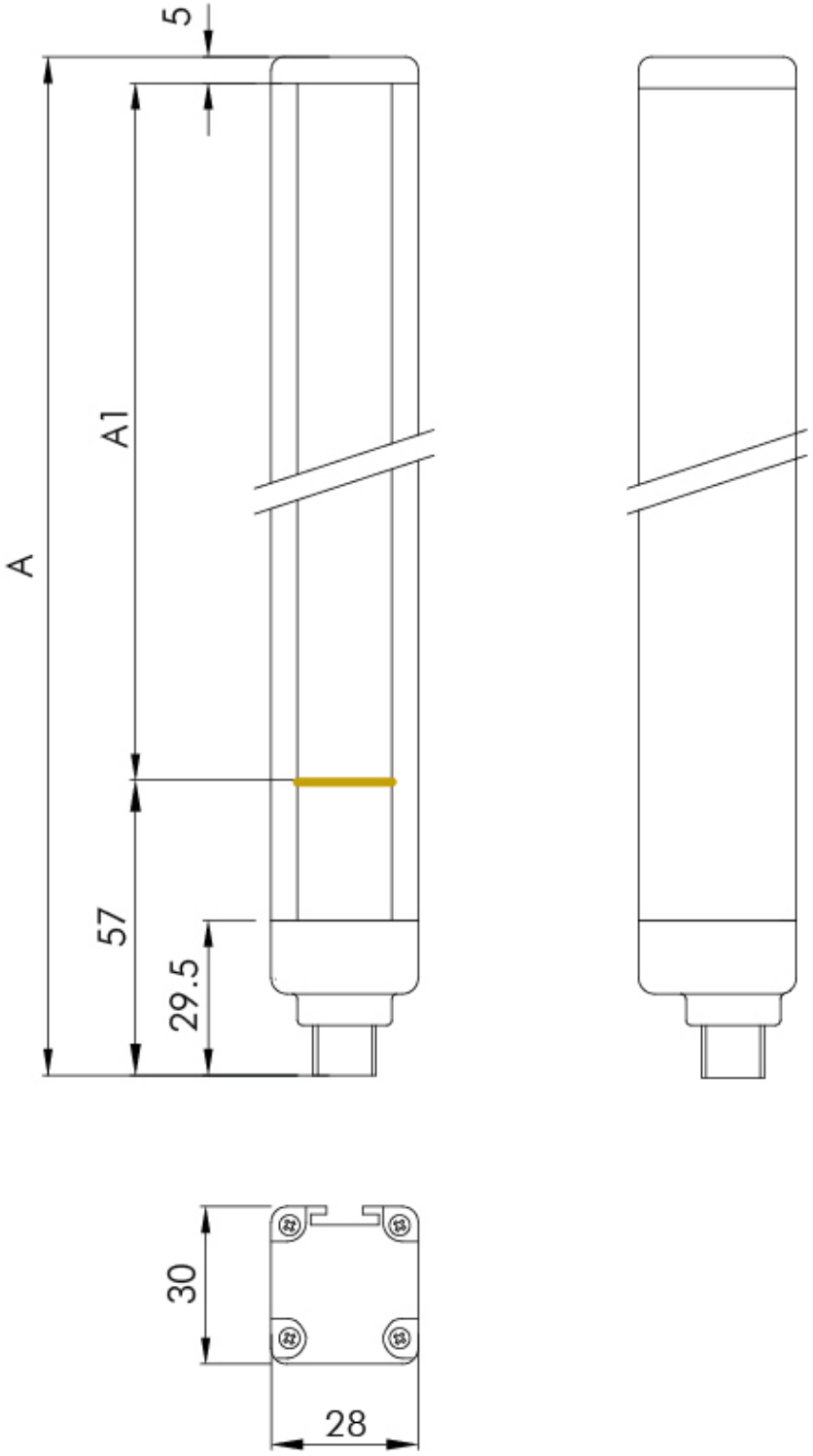

EOS2 2B X

Certificates