EOS2 1504 A

Order Code: **1320309**

Hand Detection Safety Light Curtain with Automatic Restart

Safety level
Type 2 - PL c

Protected height (mm)
1510

Resolution (mm)
40

Max. range (m)
12

Restart
Automatic

Functioning system
Emitter / Receiver

Technical Description

Compact Safety Light Curtain: Type 2, SIL 1, SILCL 1, PL c, Cat. 2
Cross Section: 28 x 30 mm
No blind area on one side
Hardware configuration: no programming necessary, easy to install and replace
Connection and configuration through M12 connectors
Unshielded cables up to 100 m can be used to connect the Safety Light Curtain
What's in the Box: Emitter, Receiver and Standard Fastening Brackets

Features

Safety level	Type 2 - PL c
Protected height (mm)	1510
Resolution (mm)	40
Controlled height (mm)	1500
Max. range (m)	12
Restart	Automatic
Functioning system	Emitter / Receiver
Safety level (SIL / PL)	Type 2 - SIL 1 - SILCL 1 - PL c - Cat. 2
Operating temperature (°C)	- 30 ... 55
Response time (ms)	14
Number of beams	51
Max. length of the connection cables (m)	100 (50 between Master and Slave)
Signalling	LEDs for light curtain's status and diagnostics
Safety output type	2 fail-safe PNP (400 mA at 24 VDC) with protection against short circuit, overload and reverse polarity
Connections	M12 5-pole connectors
MTTFD (ISO13849) years	182,2
PFHD (IEC 61508)	5,96E-08
Safety outputs	2 OSSD PNP (400 mA at 24 VDC)
Safety functions	With external module
Detection	Hand
Protective enclosures	None

EOS2 1504 A

Packaging dimensions HxLxW (mm)	145 x 1620 x 200
Product class	C
Custom tariff	85365019

Electrical data

Power supply (VDC)	24 ± 20%

Mechanical data

Overall height (mm)	1563
Cross section dimensions (mm)	28 x 30
Degree of protection	IP65 - IP67
Fastening	Back slot with set of LE type brackets (included) or to the top and lower end with swivel brackets SFB E (optional)
Gross weight (g)	4757,76

Technical drawings

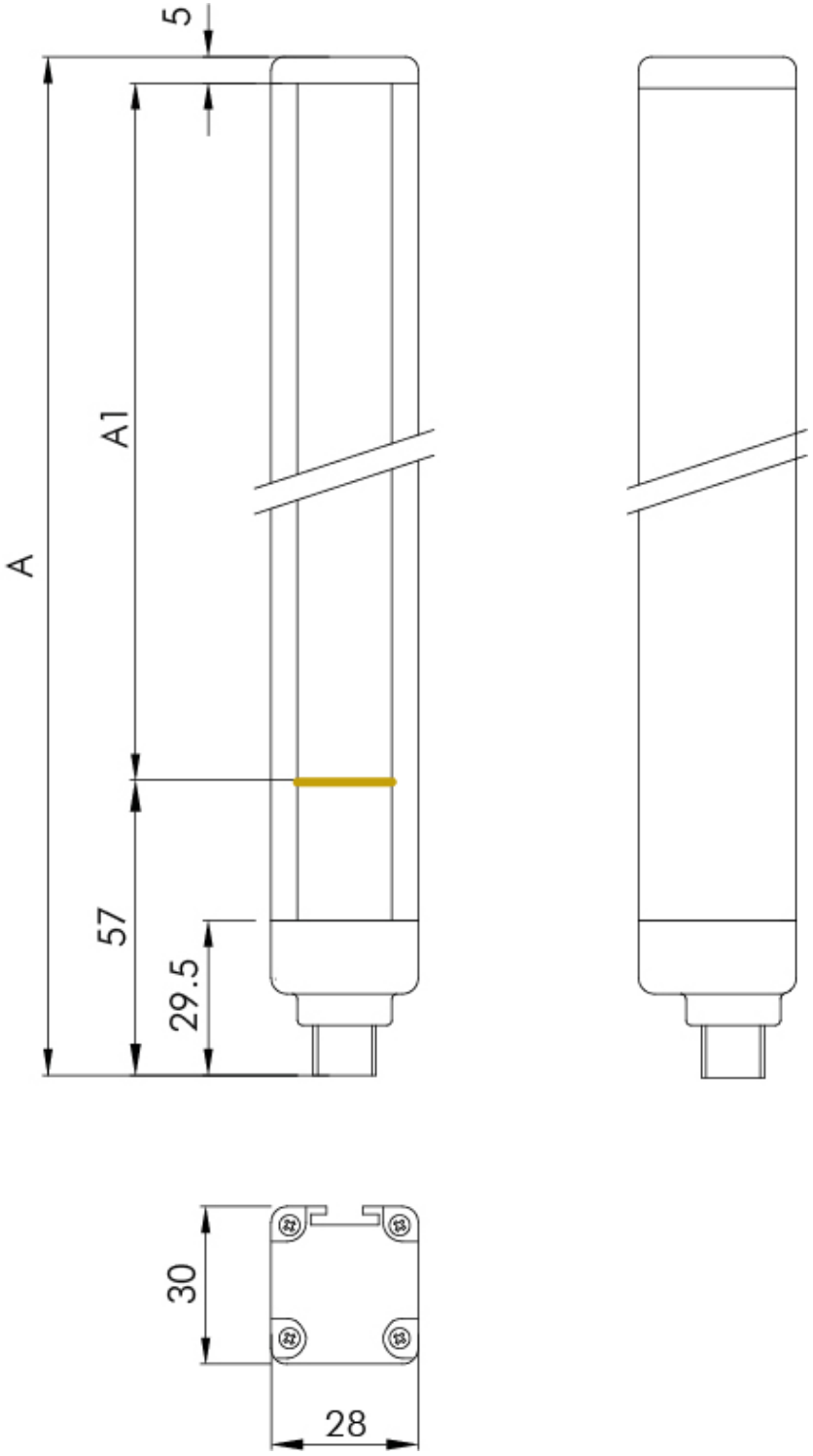

EOS2 1504 A

Certificates