HR 114

Auxiliary relays for power transmission and distribution

Data sheet
109068_en_00

© PHOENIX CONTACT 2020-03-16

1 Description

The auxiliary relays HR 114 is suitable for use in control and monitoring systems, where the requirements on the reliability of the electronics are high.

The auxiliary relays HR 114 ensures electrical isolation between auxiliary and control circuits. Despite its very high switching capacity, the relay only has a low power consumption.

For the **surface mounting** version, the connector plate of the HR 114 is snapped onto a DIN rail and wired using screw terminal blocks.

The contact assignment and nominal voltage of the coil can be configured during ordering. You can find all applicable characteristics and connection assignments on the relay itself at delivery.

Table of contents

1 Description 1
2 Ordering data 2
3 Safety notes 2
4 Technical data 3
5 Dimensions (nominal sizes in mm) 4
6 Design and method of operation 5
7 Installation 5
8 Circuit diagrams 6
9 Connecting the conductors 7
10 Options 7
11 Content of the EU Declaration of Conformity 7
12 Order key 8

NOTE: Disconnect the power to the relay for all work on the device. Make sure that the supply voltage and signal voltages cannot be switched on again by unauthorized persons!

NOTE: This product has to be installed by an electrically skilled person.

Make sure you always use the latest documentation.
It can be downloaded at phoenixcontact.net/product/1131091.

This document is valid for the products listed in Section “Ordering data” on page 2.

2 Ordering data

Products

Description	Type	Order No.	Pcs./Pkt.
Auxiliary relays - axial armature relay	HR 114	1131091-00	1

Accessories

Description	Type	Order No.	Pcs./Pkt.
Connector plate (Makrolon fiberglass reinforced, black)	for HR 114 and HR 115	1113840-00	1

3 Safety notes

- Observe the national safety and accident prevention regulations.
- Disregarding these safety regulations may result in death, serious personal injury or damage to equipment.
- Prior to startup, read the installation notes and check the auxiliary relays for damage.
- Startup, mounting, modifications, and upgrades must be carried out by an electrically skilled person.
- Before carrying out any work on the auxiliary relays, disconnect the power.
- During operation, parts of the auxiliary relays may carry hazardous voltages.
- Protective covers must not be removed when operating electrical switching devices.
- When the auxiliary relays malfunctions for the first time, replace it immediately.
- Repairs to the auxiliary relays may only be carried out by the manufacturer.
- Keep the operating instructions in a safe place.

Intended use

The auxiliary relays HR 114 is intended for use in industrial systems, for control and monitoring tasks.

4 Technical data

General data	
Maximum number of relay contacts	6
Dimensions (W x H x D) with base	64 mm × 53 mm × 116 mm
Mounting	DIN rail 35 mm
Degree of protection	IP40, connections IP00 (EN 60529)
Insulation coordination	250 V AC/DC (EN 60255-27)
Test voltage	2 kV, 50 Hz (EN 60255-27)
Permissible ambient temperature range	–5°C to +40°C
Relative humidity	5% … 95%, condensation not permitted
Weight	520 g
Coil data	
Nominal voltage AC/DC (U_N)	12 V, 24 V, 30 V, 48 V, 60 V, 110 V, 125 V, 220 V, 230 V
Mains frequency	50 Hz or 60 Hz
Continuous overvoltage	≤1.2 x U_N
Operate voltage	≥0.75 x U_N
Power consumption with U_N - for direct voltage (DC)	2.0 W to 3.6 W
- for alternating voltage (with open magnetic circuit)	3.0 VA to 4.5 VA
- for alternating voltage (with closed magnetic circuit)	2.5 VA to 4.5 VA
Contact data	
Operating time (minimum pulse duration until the relay switches)	Approx. 25 ms
Reset time	Approx. 10-25 ms
Resetting ratio for direct voltage	2
Resetting ratio for alternating voltage	2
Switching voltage, overvoltage category 2	Up to 220 V DC or 230 V AC (EN 60255-27)
Pulse width of the wiper contacts	Approx. 60 ms (optional)
Contact rating (with 10^5 switches)	
Inrush current	≤10 A AC/DC
Continuous current	≤6 A AC/DC
Breaking current at 220 V DC	0.2 A at L/R = 40 ms
Breaking current at 230 V AC	4 A at cos φ = 0.4
Connecting cables	
Conductor cross section	Up to 4 mm^2
Torque of clamping screws	0.42 Nm

Characteristic curve for contact rating

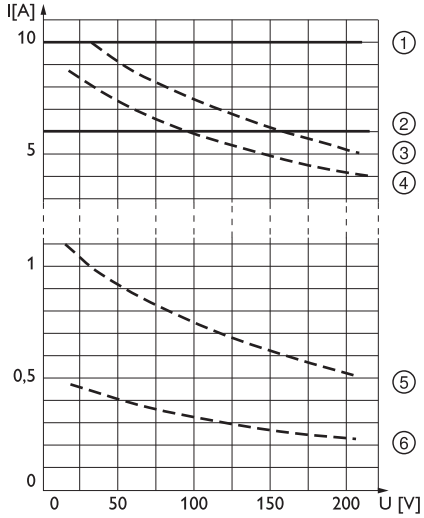

Figure 1 Characteristic curves

The diagram describes the permissible current as a function of the voltage.

The characteristic curves in the diagram are based on 10^5 switching operations of the relay contacts of the auxiliary relays HR 114.

① Inrush current AC/DC
② Continuous current AC/DC
③ Breaking current for ohmic AC load
④ Breaking current for inductive AC load, cos φ = 0.4
⑤ Breaking current for ohmic DC load
⑥ Breaking current for inductive DC load, L/R = 10 ms

5 Dimensions (nominal sizes in mm)

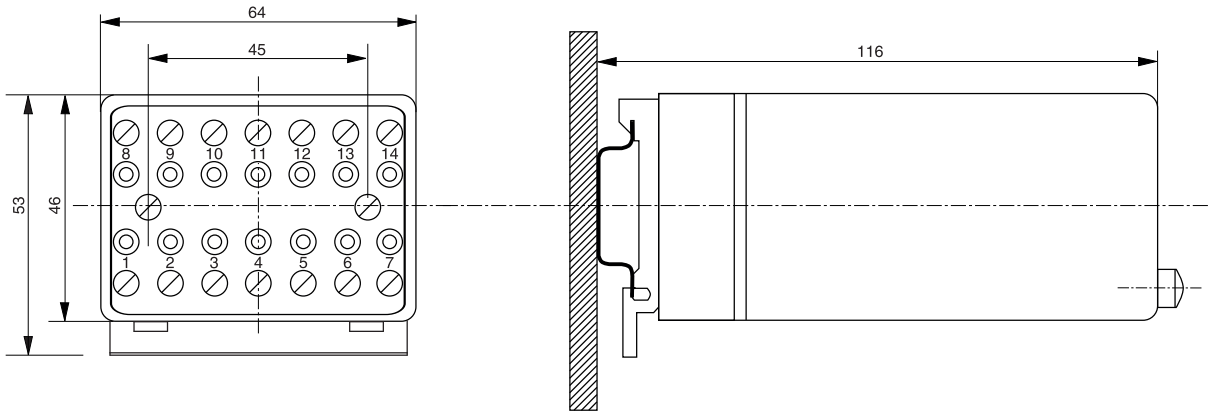

Figure 2 Dimensions

6 Design and method of operation

The auxiliary relays HR 114 has been designed as axial armature relay. The armature actuates all contacts simultaneously, without using levers. When de-energized, the armature is held in the rest position by contact springs. The transparent plastic housing ② protects the relay against touch and soiling.

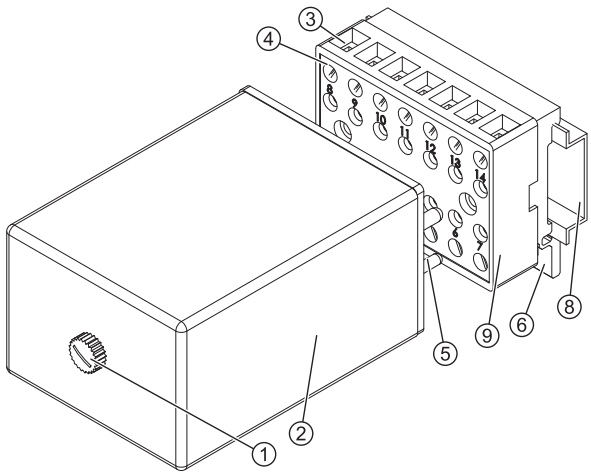

① Screw
② Housing
③ Screw terminal blocks
④ Clamping screws
⑤ Contact pins
⑥ Release lever
⑦ Threaded pin
⑧ DIN rail
⑨ Connector plate

Figure 3 Surface

The HR 114 is fitted with plug-in contacts ⑤ for fast and secure mounting.

The connection to the supply voltage and the signals is established using a matching connector plate ⑨ (surface-mounted version). With a screw connection, it is suitable for conductor cross sections up to 4 mm^2.

Signal switching via relay contacts is robust and reliable. The contacts have a low contact resistance, ensuring that only very low levels of exhaust heat are generated – even at very high continuous currents. Therefore, a separate cooling system is not required. When the contacts are open, the relay has a very high insulation resistance, and the reverse voltage in the switching path is therefore very high. You also benefit from immunity, thanks to the hysteresis behavior and robustness of the coil.

7 Installation

1. Install the relay in a housing with at least IP54 protection (see IEC 60529). The housing provides protection against mechanical or electrical damage.

WARNING: Dangerous contact voltage!
You may only perform this work on the device if you are a qualified electrically skilled person. You have to be familiar with the necessary safety precautions.

2. During maintenance work, disconnect the relay from all effective power sources.
3. The supply voltage at the relay input and the switching voltage at the relay output can be hazardous (>30 V).
4. Snap the connector plate ⑨ onto a DIN rail ⑧. To do so, you have to press the release lever ⑥ toward the screw terminal blocks ③. The connector plate is mandatory for electric safety.
5. Wire the connector plate in accordance with your specifications.
   The circuit diagram of your HR 114 version is affixed to the housing. The rating plate with connection data can be found on the relay body.
6. Plug the relay with its contact pins ⑤ into the connector plate intended for this purpose. The coding of the plug-in contacts prevents the relay from being plugged in incorrectly.
7. To release the connector plate from the DIN rail, you have to press the release lever ⑥ toward the screw terminal blocks ③.

8 Circuit diagrams

The type of relay contacts are configured during ordering.

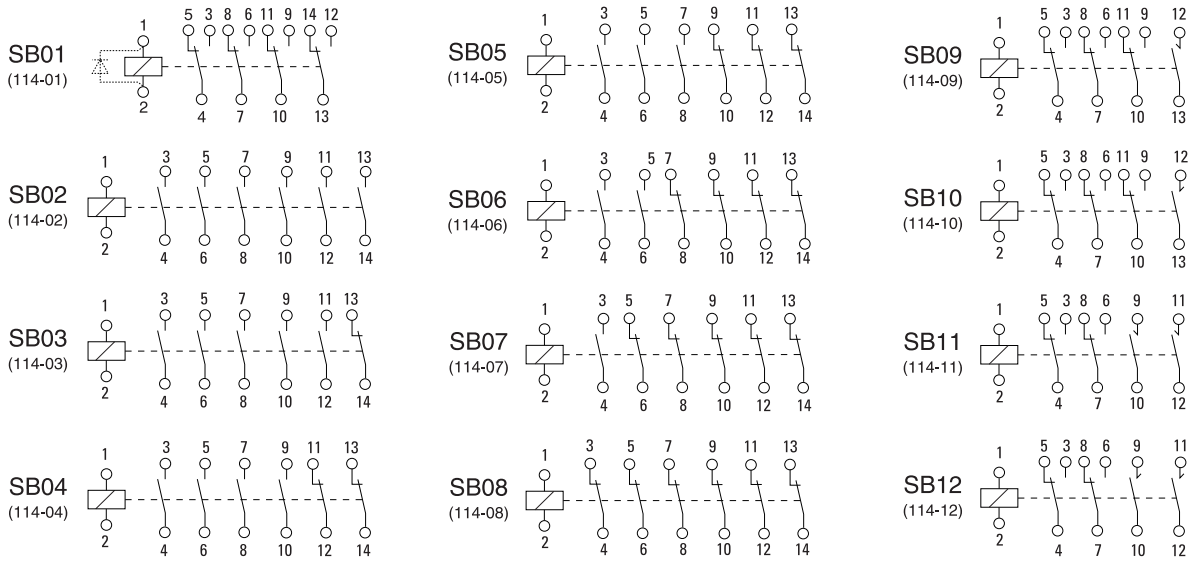

Figure 4 Possible circuit diagrams

The freewheeling diode of the DC voltage versions is optional.

9 Connecting the conductors

1. Strip the conductors to the specified length.
2. For flexible conductors, use ferrules in acc. with DIN 46228-4.
3. Insert the conductors into the screw terminal block ③ as far as they will go.
4. Tighten the screws ④ of all screw terminal blocks. Observe the specified torque. We recommend to also tighten the terminal points of screw terminal blocks that are not used.
5. If you want to connect more than one conductor per screw terminal block, check the specifications regarding the connection capacity. The specifications apply to the connection of two conductors of the same cross section and the same conductor type.
6. To open the screw terminal block and remove the conductor, release the terminal screw ④.

10 Options

In addition to the options of using different relay contacts (see "Circuit diagrams" on page 6) and coil voltages, other options are also offered during ordering (see "Order key" on page 8).

Freewheeling diode

The freewheeling diode is used as protection against overvoltage when switching off a relay coil for direct voltage. To this end, a diode (type GP02-40; 4000 V) is connected in parallel in the reverse direction.

Wiper contact

A wiper contact (e.g. circuit diagram **SB09** on page 6) supplies a single pulse of the specified duration at the output as a reaction to a pulse at the input.

11 Content of the EU Declaration of Conformity

The above-mentioned products are in conformity with the essential requirements of the following directives:

2011/65/EU	RoHS Directive
2014/35/EU	Low Voltage Directive

12 Order key

The purpose of this order key is only to enable reading of an existing order number.

Order No.	Relay type	Current type and design	Input voltage	Circuit diagram	Freewheeling diode
1131091	23 (HR 114)	90 (DC, surface)	2 (12 V)	01 (SB01)	FD (with diode)
		91 – AC, surface	3 (24 V)	02 (SB02)	00 (without diode)
			4 (30 V)	03 (SB03)	
			5 (48 V)	04 (SB04)	
			6 (60 V)	05 (SB05)	
			7 (110 V)	06 (SB06)	
			8 (125 V)	07 (SB07)	
			9 (220/230 V)	08 (SB08)	
				09 (SB08)	
				10 (SB10)	
				11 (SB11)	
				12 (SB12)	

Note: With this order key, you can decipher the entire order number. Certain options of the key are mutually exclusive. You can find the available options in the e-shop at phoenixcontact.net/product/1131091.