SIEMENS

Data sheet 3RT2016-1UB42

power contactor, AC-3e/AC-3, 9 A, 4 kW / 400 V, 3-pole, 24 V DC, with integrated varistor, auxiliary contacts: 1 NC, screw terminal, size: S00

product brand name	SIRIUS
product designation	Power contactor
product type designation	3RT2
General technical data	
size of contactor	S00
product extension	
● function module for communication	No
● auxiliary switch	Yes
power loss [W] for rated value of the current	
● at AC in hot operating state	0.9 W
● at AC in hot operating state per pole	0.3 W
● without load current share typical	4 W
type of calculation of power loss depending on pole	quadratic
insulation voltage	
● of main circuit with degree of pollution 3 rated value	690 V
● of auxiliary circuit with degree of pollution 3 rated value	690 V
surge voltage resistance	
● of main circuit rated value	6 kV
● of auxiliary circuit rated value	6 kV
maximum permissible voltage for protective separation between coil and main contacts according to EN 60947-1	400 V
shock resistance at rectangular impulse	
● at DC	6,7g / 5 ms, 4,2g / 10 ms
shock resistance with sine pulse	
● at DC	10,5g / 5 ms, 6,6g / 10 ms
mechanical service life (operating cycles)	
● of contactor typical	30 000 000
reference code according to IEC 81346-2	Q
Substance Prohibitance (Date)	
Weight	0.294 kg
Ambient conditions	
installation altitude at height above sea level maximum	2 000 m
ambient temperature	
● during operation	-25 ... +60 °C
● during storage	-55 ... +80 °C
relative humidity minimum	10 %
relative humidity at 55 °C according to IEC 60068-2-30 maximum	95 %
Environmental footprint	
Environmental Product Declaration(EPD)	Yes
Global Warming Potential [CO2 eq] total	153 kg

Subject to change without notice
© Copyright Siemens

Global Warming Potential [CO2 eq] during manufacturing	1.42 kg
Global Warming Potential [CO2 eq] during operation	152 kg
Global Warming Potential [CO2 eq] after end of life	-0.305 kg
Main circuit	
number of poles for main current circuit	3
number of NO contacts for main contacts	3
operating voltage	
● at AC-3 rated value maximum	690 V
● at AC-3e rated value maximum	690 V
operational current	
● at AC-1 at 400 V at ambient temperature 40 °C rated value	22 A
● at AC-1	
— up to 690 V at ambient temperature 40 °C rated value	22 A
— up to 690 V at ambient temperature 60 °C rated value	20 A
● at AC-3	
— at 400 V rated value	9 A
— at 500 V rated value	7.7 A
— at 690 V rated value	6.7 A
● at AC-3e	
— at 400 V rated value	9 A
— at 500 V rated value	7.7 A
— at 690 V rated value	6.7 A
● at AC-4 at 400 V rated value	8.5 A
● at AC-5a up to 690 V rated value	19.4 A
● at AC-5b up to 400 V rated value	7.4 A
● at AC-6a	
— up to 230 V for current peak value n=20 rated value	5.3 A
— up to 400 V for current peak value n=20 rated value	5.3 A
— up to 500 V for current peak value n=20 rated value	5.3 A
— up to 690 V for current peak value n=20 rated value	5 A
● at AC-6a	
— up to 230 V for current peak value n=30 rated value	3.5 A
— up to 400 V for current peak value n=30 rated value	3.5 A
— up to 500 V for current peak value n=30 rated value	3.6 A
— up to 690 V for current peak value n=30 rated value	3.3 A
minimum cross-section in main circuit at maximum AC-1 rated value	4 mm²
operational current for approx. 200000 operating cycles at AC-4	
● at 400 V rated value	4.1 A
● at 690 V rated value	3.3 A
operational current	
● **at 1 current path at DC-1**	
— at 24 V rated value	20 A
— at 60 V rated value	20 A
— at 110 V rated value	2.1 A
— at 220 V rated value	0.8 A
— at 440 V rated value	0.6 A
— at 600 V rated value	0.6 A
● **with 2 current paths in series at DC-1**	
— at 24 V rated value	20 A
— at 60 V rated value	20 A
— at 110 V rated value	12 A
— at 220 V rated value	1.6 A
— at 440 V rated value	0.8 A
— at 600 V rated value	0.7 A
● **with 3 current paths in series at DC-1**	
— at 24 V rated value	20 A
— at 60 V rated value	20 A

Subject to change without notice
© Copyright Siemens

— at 110 V rated value	20 A
— at 220 V rated value	20 A
— at 440 V rated value	1.3 A
— at 600 V rated value	1 A
● at 1 current path at DC-3 at DC-5	
— at 24 V rated value	20 A
— at 60 V rated value	0.5 A
— at 110 V rated value	0.15 A
● with 2 current paths in series at DC-3 at DC-5	
— at 24 V rated value	20 A
— at 60 V rated value	5 A
— at 110 V rated value	0.35 A
● with 3 current paths in series at DC-3 at DC-5	
— at 24 V rated value	20 A
— at 60 V rated value	20 A
— at 110 V rated value	20 A
— at 220 V rated value	1.5 A
— at 440 V rated value	0.2 A
— at 600 V rated value	0.2 A
operating power	
● at AC-2 at 400 V rated value	4 kW
● at AC-3	
— at 230 V rated value	2.2 kW
— at 400 V rated value	4 kW
— at 500 V rated value	4 kW
— at 690 V rated value	5.5 kW
● at AC-3e	
— at 230 V rated value	2.2 kW
— at 400 V rated value	4 kW
— at 500 V rated value	4 kW
— at 690 V rated value	5.5 kW
operating power for approx. 200000 operating cycles at AC-4	
● at 400 V rated value	2 kW
● at 690 V rated value	2.5 kW
operating apparent power at AC-6a	
● up to 230 V for current peak value n=20 rated value	2 kVA
● up to 400 V for current peak value n=20 rated value	3.6 kVA
● up to 500 V for current peak value n=20 rated value	4.6 kVA
● up to 690 V for current peak value n=20 rated value	5.9 kVA
operating apparent power at AC-6a	
● up to 230 V for current peak value n=30 rated value	1.3 kVA
● up to 400 V for current peak value n=30 rated value	2.4 kVA
● up to 500 V for current peak value n=30 rated value	3.1 kVA
● up to 690 V for current peak value n=30 rated value	4 kVA
short-time withstand current in cold operating state up to 40 °C	
● limited to 1 s switching at zero current maximum	155 A; Use minimum cross-section acc. to AC-1 rated value
● limited to 5 s switching at zero current maximum	111 A; Use minimum cross-section acc. to AC-1 rated value
● limited to 10 s switching at zero current maximum	86 A; Use minimum cross-section acc. to AC-1 rated value
● limited to 30 s switching at zero current maximum	66 A; Use minimum cross-section acc. to AC-1 rated value
● limited to 60 s switching at zero current maximum	55 A; Use minimum cross-section acc. to AC-1 rated value
no-load switching frequency	
● at DC	10 000 1/h
operating frequency	
● at AC-1 maximum	1 000 1/h
● at AC-2 maximum	750 1/h
● at AC-3 maximum	750 1/h
● at AC-3e maximum	750 1/h
● at AC-4 maximum	250 1/h
Control circuit/ Control	

Subject to change without notice
© Copyright Siemens

type of voltage of the control supply voltage	DC
control supply voltage at DC rated value	24 V
operating range factor control supply voltage rated value of magnet coil at DC	
● initial value	0.8
● full-scale value	1.1
design of the surge suppressor	with varistor
closing power of magnet coil at DC	4 W
holding power of magnet coil at DC	4 W
closing delay	
● at DC	30 ... 100 ms
opening delay	
● at DC	7 ... 13 ms
arcing time	10 ... 15 ms
control version of the switch operating mechanism	Standard A1 - A2
Auxiliary circuit	
number of NC contacts for auxiliary contacts instantaneous contact	1
operational current at AC-12 maximum	10 A
operational current at AC-15	
● at 230 V rated value	10 A
● at 400 V rated value	3 A
● at 500 V rated value	2 A
● at 690 V rated value	1 A
operational current at DC-12	
● at 24 V rated value	10 A
● at 48 V rated value	6 A
● at 60 V rated value	6 A
● at 110 V rated value	3 A
● at 125 V rated value	2 A
● at 220 V rated value	1 A
● at 600 V rated value	0.15 A
operational current at DC-13	
● at 24 V rated value	10 A
● at 48 V rated value	2 A
● at 60 V rated value	2 A
● at 110 V rated value	1 A
● at 125 V rated value	0.9 A
● at 220 V rated value	0.3 A
● at 600 V rated value	0.1 A
contact reliability of auxiliary contacts	1 faulty switching per 100 million (17 V, 1 mA)
UL/CSA ratings	
full-load current (FLA) for 3-phase AC motor	
● at 480 V rated value	7.6 A
● at 600 V rated value	9 A
yielded mechanical performance [hp]	
● for single-phase AC motor	
— at 110/120 V rated value	0.33 hp
— at 230 V rated value	1 hp
● for 3-phase AC motor	
— at 200/208 V rated value	2 hp
— at 220/230 V rated value	3 hp
— at 460/480 V rated value	5 hp
— at 575/600 V rated value	7.5 hp
contact rating of auxiliary contacts according to UL	A600 / Q600
Short-circuit protection	
design of the fuse link	
● for short-circuit protection of the main circuit	
— with type of coordination 1 required	gG: 35A (690V,100kA), aM: 20A (690V,100kA), BS88: 35A (415V,80kA)
— with type of assignment 2 required	gG: 20A (690V,100kA), aM: 16A (690V, 100kA), BS88: 20A (415V, 80kA)
● for short-circuit protection of the auxiliary switch required	gG: 10 A (500 V, 1 kA)

Subject to change without notice
© Copyright Siemens

Installation/ mounting/ dimensions	
mounting position	+/-180° rotation possible on vertical mounting surface; can be tilted forward and backward by +/- 22.5° on vertical mounting surface
fastening method	screw and snap-on mounting onto 35 mm DIN rail according to DIN EN 60715
height	58 mm
width	45 mm
depth	73 mm
required spacing	
● with side-by-side mounting	
— forwards	10 mm
— upwards	10 mm
— downwards	10 mm
— at the side	0 mm
● for grounded parts	
— forwards	10 mm
— upwards	10 mm
— at the side	6 mm
— downwards	10 mm
● for live parts	
— forwards	10 mm
— upwards	10 mm
— downwards	10 mm
— at the side	6 mm
Connections/ Terminals	
type of electrical connection	
● for main current circuit	screw-type terminals
● for auxiliary and control circuit	screw-type terminals
● at contactor for auxiliary contacts	Screw-type terminals
● of magnet coil	Screw-type terminals
type of connectable conductor cross-sections	
● for main contacts	
— solid	2x (0.5 ... 1.5 mm²), 2x (0.75 ... 2.5 mm²), 2x 4 mm²
— solid or stranded	2x (0,5 ... 1,5 mm²), 2x (0,75 ... 2,5 mm²), 2x 4 mm²
— finely stranded with core end processing	2x (0.5 ... 1.5 mm²), 2x (0.75 ... 2.5 mm²)
● for AWG cables for main contacts	2x (20 ... 16), 2x (18 ... 14), 2x 12
connectable conductor cross-section for main contacts	
● solid	0.5 ... 4 mm²
● stranded	0.5 ... 4 mm²
● finely stranded with core end processing	0.5 ... 2.5 mm²
connectable conductor cross-section for auxiliary contacts	
● solid or stranded	0.5 ... 4 mm²
● finely stranded with core end processing	0.5 ... 2.5 mm²
type of connectable conductor cross-sections	
● for auxiliary contacts	
— solid or stranded	2x (0.5 ... 1.5 mm²), 2x (0.75 ... 2.5 mm²), 2x 4 mm²
— finely stranded with core end processing	2x (0.5 ... 1.5 mm²), 2x (0.75 ... 2.5 mm²)
● for AWG cables for auxiliary contacts	2x (20 ... 16), 2x (18 ... 14), 2x 12
AWG number as coded connectable conductor cross section	
● for main contacts	20 ... 12
● for auxiliary contacts	20 ... 12
Safety related data	
product function	
● mirror contact according to IEC 60947-4-1	Yes
● positively driven operation according to IEC 60947-5-1	No
● suitable for safety function	Yes
suitability for use safety-related switching OFF	Yes
service life maximum	20 a
test wear-related service life necessary	Yes
proportion of dangerous failures	
● with low demand rate according to SN 31920	40 %

Subject to change without notice
© Copyright Siemens

● with high demand rate according to SN 31920	73 %
B10 value with high demand rate according to SN 31920	1 000 000
failure rate [FIT] with low demand rate according to SN 31920	100 FIT
ISO 13849	
device type according to ISO 13849-1	3
overdimensioning according to ISO 13849-2 necessary	Yes
IEC 61508	
safety device type according to IEC 61508-2	Type A
Electrical Safety	
protection class IP on the front according to IEC 60529	IP20
touch protection on the front according to IEC 60529	finger-safe, for vertical contact from the front

Approvals Certificates

General Product Approval

UKCA	CE EG-Konf.	CCC	Confirmation	UL	KC

General Product Approval	EMV	Functional Saftey	Test Certificates		Marine / Shipping
EAC	RCM	Type Examination Certificate	Type Test Certificates/Test Report	Special Test Certificate	ABS

Marine / Shipping					other
BUREAU VERITAS	DNV	PRS	RINA	RMRS	Confirmation

other	Railway	Dangerous goods	Environment	
Miscellaneous	Special Test Certificate	Transport Information	EPD	Environmental Confirmations

Further information

Information on the packaging
https://support.industry.siemens.com/cs/ww/en/view/109813875
Information- and Downloadcenter (Catalogs, Brochures,…)
https://www.siemens.com/ic10
Industry Mall (Online ordering system)
https://mall.industry.siemens.com/mall/en/en/Catalog/product?mlfb=3RT2016-1UB42
Cax online generator
http://support.automation.siemens.com/WW/CAXorder/default.aspx?lang=en&mlfb=3RT2016-1UB42
Service&Support (Manuals, Certificates, Characteristics, FAQs,...)
https://support.industry.siemens.com/cs/ww/en/ps/3RT2016-1UB42
Image database (product images, 2D dimension drawings, 3D models, device circuit diagrams, EPLAN macros, ...)
http://www.automation.siemens.com/bilddb/cax_de.aspx?mlfb=3RT2016-1UB42&lang=en
Characteristic: Tripping characteristics, I^2t, Let-through current
https://support.industry.siemens.com/cs/ww/en/ps/3RT2016-1UB42/char
Further characteristics (e.g. electrical endurance, switching frequency)
http://www.automation.siemens.com/bilddb/index.aspx?view=Search&mlfb=3RT2016-1UB42&objecttype=14&gridview=view1

Subject to change without notice
© Copyright Siemens

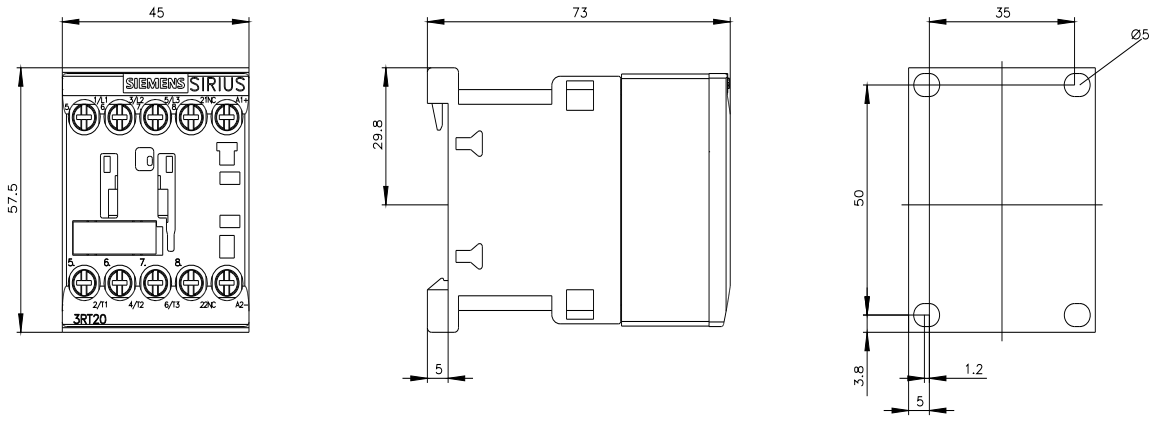

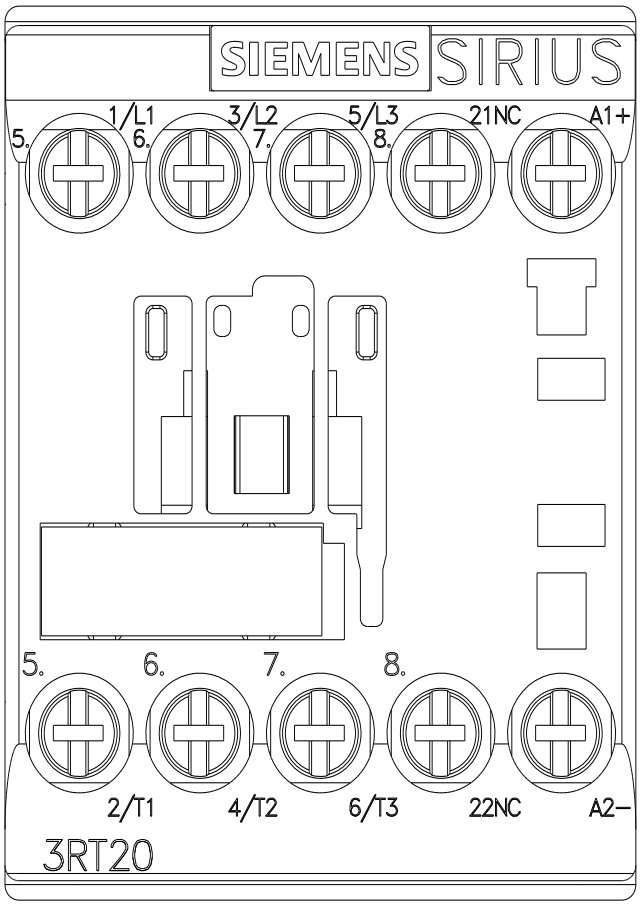

Subject to change without notice
© Copyright Siemens

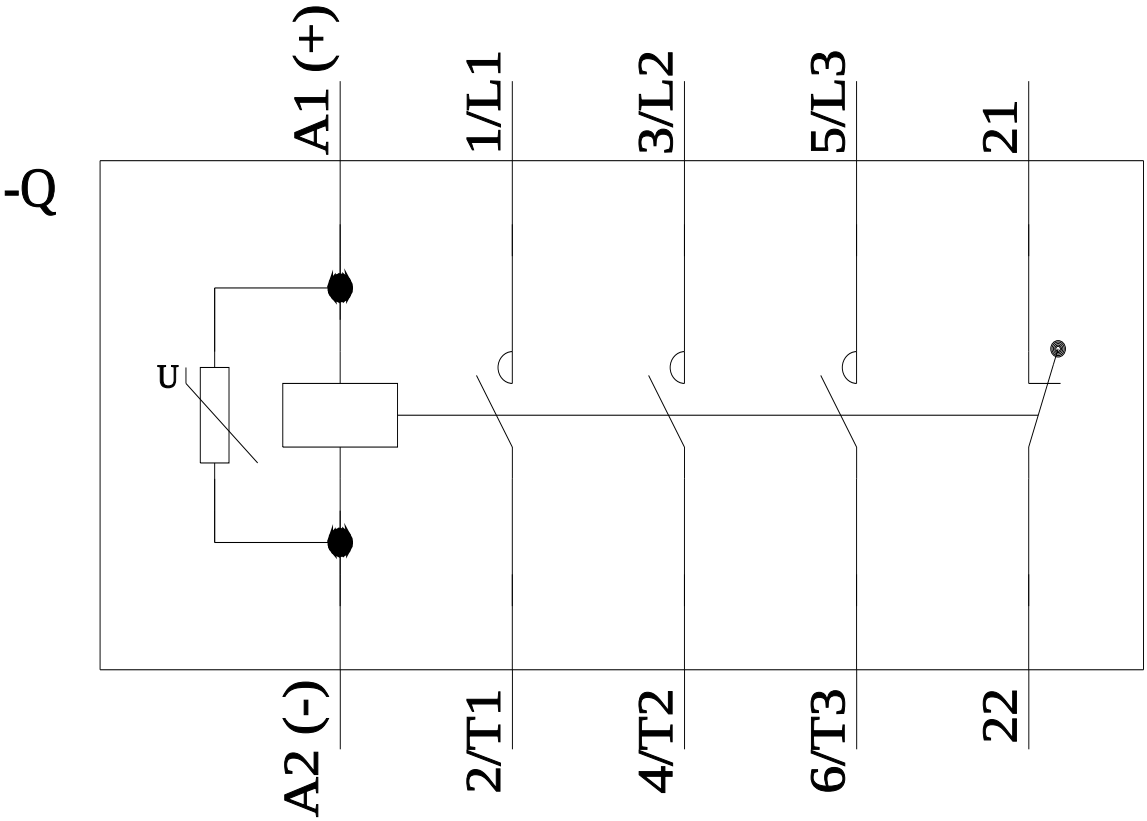

last modified:

Subject to change without notice
© Copyright Siemens