Product data sheet

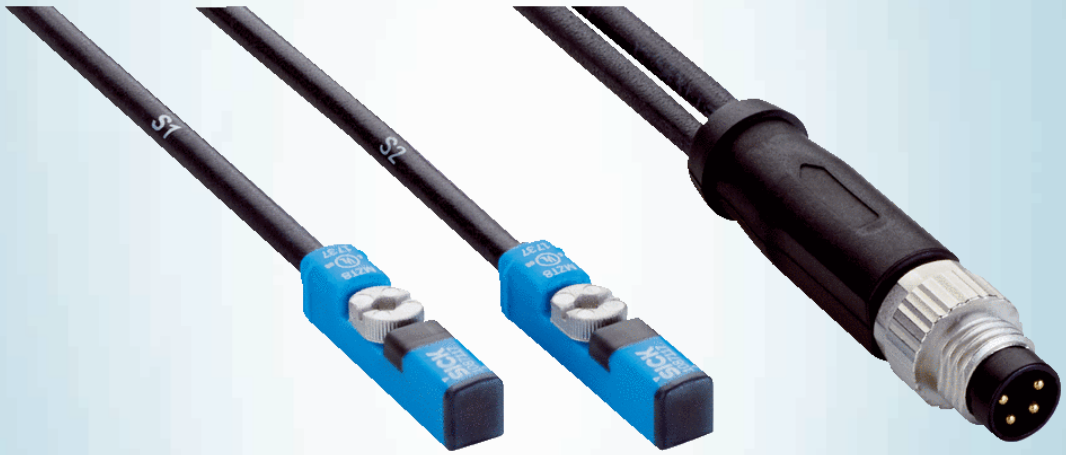

MZT8-03VPSAKRTS42

MZT8 Twin

SENSORS FOR T-SLOT CYLINDERS

SICK
Sensor Intelligence.

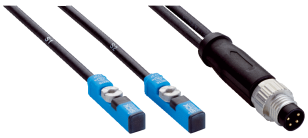

Ordering information

Type	Part no.
MZT8-03VPSAKRTS42	1141434

Other models and accessories ➜ www.sick.com/MZT8_Twin

Detailed technical data

Features

Cylinder type	T-slot
Cylinder types with adapter	Profile cylinder Tie rod cylinder Round body cylinder Dovetail groove cylinder SMC rail CDQ2 SMC rail ECDQ2
Housing length	24 mm
Switching output	PNP
Switching frequency	1,000 Hz
Output function	NO
Electrical wiring	DC 4-wire
Enclosure rating	IP68 [1]
Special features	Two sensor heads on one plug Visual installation aid/LED indicator (yellow) Power LED (green)

[1] According to EN 60529 (IP 67 / IP 68).

Mechanics/electronics

Supply voltage	10 V DC ... 30 V DC
Power consumption	10 mA, without load
Voltage drop	≤ 2.2 V
Continuous current I_a	≤ 200 mA
Protection class	III
Time delay before availability	25 ms
Response sensitivity, typ.	2.6 mT
Overrun distance, typ.	3 mm
Hysteresis, typ.	≤ 0.5 mT
Reproducibility	≤ 0.1 mT [1]
Reverse polarity protection	Yes

[1] Supply voltage U_B and constant ambient temperature Ta.

Short-circuit protection	Yes
Status indicator LED	Yes
Power-up pulse protection	Yes
Ambient operating temperature	–30 °C ... +80 °C
Shock and vibration resistance	30 g, 11 ms / 10 ... 55 Hz, 1 mm
EMC	According to EN 60947-5-2
Connection type	Cable with connector M8, 4-pin, with knurled nuts, 0.3 m
Connection type Detail	
Conductor cross section	0.14 mm²
Cable diameter	Ø 2.9 mm
Bending radius	With fixed installation > 8 x cable diameter For flexible use > 12 x cable diameter
Cable outlet	Axial
Material	
Housing	Plastic, PA12
Cable	PUR
UL File No.	NRKH.E181493 & NRKH7.E181493

[1] Supply voltage U_B and constant ambient temperature Ta.

Classifications

ECLASS 5.0	27270104
ECLASS 5.1.4	27270104
ECLASS 6.0	27270104
ECLASS 6.2	27270104
ECLASS 7.0	27270104
ECLASS 8.0	27270104
ECLASS 8.1	27270104
ECLASS 9.0	27270104
ECLASS 10.0	27270104
ECLASS 11.0	27270104
ECLASS 12.0	27274301
ETIM 5.0	EC002544
ETIM 6.0	EC002544
ETIM 7.0	EC002544
ETIM 8.0	EC002544
UNSPSC 16.0901	39122230

Installation note

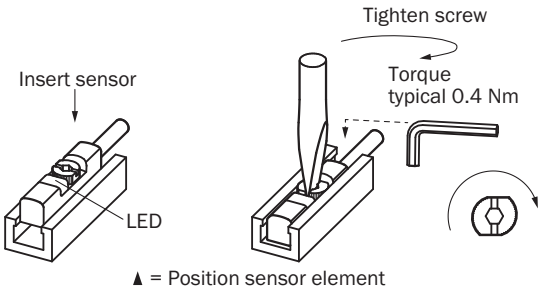

Connection diagram

Cd-398

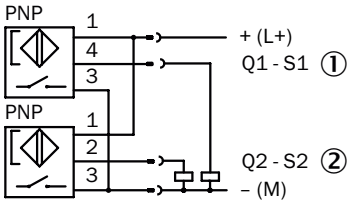

① Sensor head 1
② Sensor head 2

Dimensional drawing (Dimensions in mm (inch))

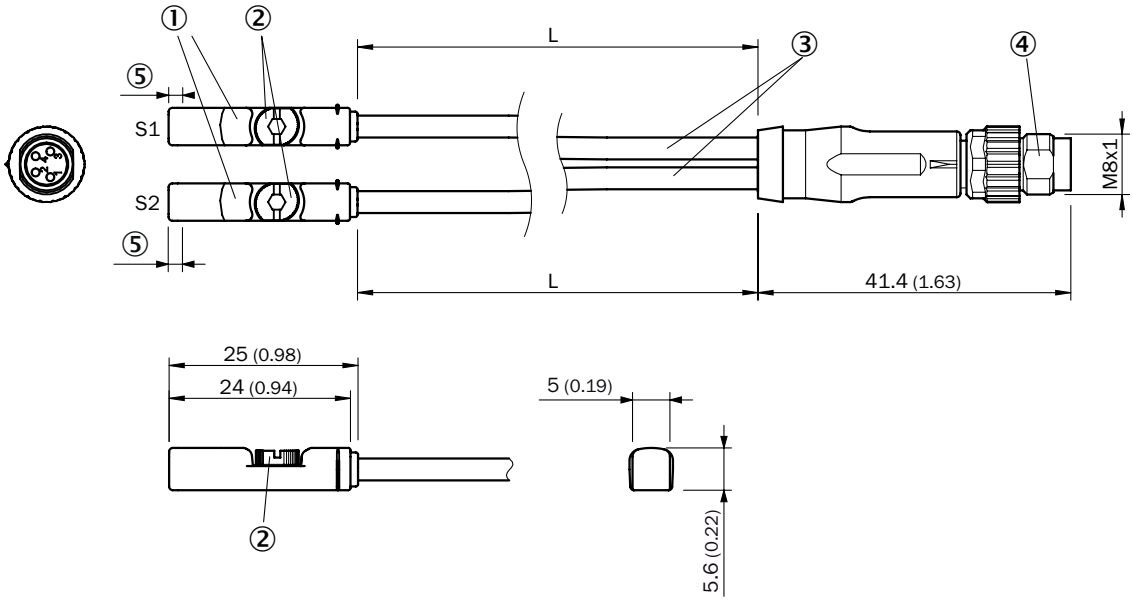

① Display LED
② Fixing screw SW 2.0
③ Cable
④ Connection
⑤ Sensor element position; short overrun distance (3 mm): 2.25 mm, long overrun distance (9 mm): 1.5 mm

Part no.	Type	L
1114713	MZT8-03VPS-KRTS37	100 mm
1095485	MZT8-2V8PS-KRTS33	300 mm
1087116	MZT8-03VPS-KRTS11	300 mm
1141434	MZT8-03VPSAKRTS42	300 mm
1087117	MZT8-03VPS-KRT	500 mm
1087118	MZT8-03VPS-KRTS12	750 mm

SICK AT A GLANCE

SICK is one of the leading manufacturers of intelligent sensors and sensor solutions for industrial applications. A unique range of products and services creates the perfect basis for controlling processes securely and efficiently, protecting individuals from accidents and preventing damage to the environment.

We have extensive experience in a wide range of industries and understand their processes and requirements. With intelligent sensors, we can deliver exactly what our customers need. In application centers in Europe, Asia and North America, system solutions are tested and optimized in accordance with customer specifications. All this makes us a reliable supplier and development partner.

Comprehensive services complete our offering: SICK LifeTime Services provide support throughout the machine life cycle and ensure safety and productivity.

For us, that is "Sensor Intelligence."

WORLDWIDE PRESENCE:

Contacts and other locations –www.sick.com

SICK
Sensor Intelligence.