Product data sheet

MPS-M50TUH0EA45CZZ

MPS-M

POSITION SENSORS

SICK
Sensor Intelligence.

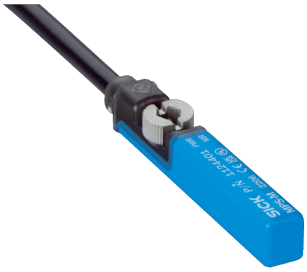

Ordering information

Type	Part no.
MPS-M50TUH0EA45CZZ	1144026

Other models and accessories → www.sick.com/MPS-M

Detailed technical data

Features

Cylinder type	T-slot
Detection zone	0 mm ... 50 mm [1]
Cylinder types with adapter	Profile cylinder Tie rod cylinder Round body cylinder Dovetail groove cylinder SMC rail CDQ2 SMC rail ECDQ2
Measuring range	50 mm
Housing length	32.5 mm
Output function	Analog, IO-Link
Electrical wiring	DC 4-wire
Analog output (voltage)	0 V ... 10 V
Enclosure rating	IP67
Diagnostic functionality	Actuator diagnosis

[1] Deviations are possible depending on the drive.

Mechanics/electronics

Supply voltage	13 V DC ... 30 V DC [1]
Min. load resistance	≥ 10 kΩ
Protection class	III
Time delay before availability	0.15 s
Power consumption	≤ 550 mW

[1] 12 V DC ... 30 V DC for deactivated out-of-range display.
[2] The sensor must not be subjected to magnetic fields strengths of > 20 mT!
[3] IO-Link: The resolution is always 0.01 mm; analog output: at measuring range > 0.014 mm applies for the measuring range resolution / 3723.
[4] At 25 ° C, linearity error (maximum deviation) depending on response curve and minimal deviation function.
[5] At 25 ° C, repeatability magnet movement in one direction.

Required magnetic field sensitivity, typ.	2 mT ... 20 mT [2]
Resolution, typ.	0,01 mm [3]
Linearity error, typ.	0.3 mm [4]
Repeat accuracy, typ.	0.05 mm [5]
Sampling rate, typ.	1 ms
Reverse polarity protection	Yes
Short-circuit protection	Yes
Measuring range LED	Yes
Status indicator LED	Yes
Ambient operating temperature	–20 °C ... +70 °C
Shock and vibration resistance	30 g, 11 ms / 10 ... 55 Hz, 1 mm
EMC	According to EN 60947-5-2
Connection type	Cable open end, 5 m
Connection type Detail	
Conductor cross section	0.08 mm²
Cable diameter	Ø 2.6 mm
Bending radius	For flexible use > 10 x cable diameter With fixed installation > 5 x cable diameter
Cable outlet	Axial
Material	
Housing	Plastic, PA, strengthened
Cable	PUR

[1] 12 V DC ... 30 V DC for deactivated out-of-range display.
[2] The sensor must not be subjected to magnetic fields strengths of > 20 mT!
[3] IO-Link: The resolution is always 0.01 mm; analog output: at measuring range > 0.014 mm applies for the measuring range resolution / 3723.
[4] At 25 ° C, linearity error (maximum deviation) depending on response curve and minimal deviation function.
[5] At 25 ° C, repeatability magnet movement in one direction.

Safety-related parameters

$MTTF_D$	744 years
DC_{avg}	0%
T_M (mission time)	20 years

Communication interface

Communication interface	IO-Link V1.1
Communication Interface detail	COM3
Cycle time	1 ms
Process data length	32 Bit
Process data structure	Bit 0 ... 7 = switching signal Qint1 - Qint7 / Alerts Bit 8 ... 15 = scaling Bit 16 ... 31 = position (in x10 µm)

Diagnosis

Actuator diagnosis	
Status data	Cycle count, travel time, cylinder travel, dwell time, piston velocity
Magnetic field strength	2 mT ... 18 mT

Classifications

ECLASS 5.0	27270104
ECLASS 5.1.4	27270104
ECLASS 6.0	27270104
ECLASS 6.2	27270104
ECLASS 7.0	27270104
ECLASS 8.0	27270104
ECLASS 8.1	27270104
ECLASS 9.0	27270104
ECLASS 10.0	27270104
ECLASS 11.0	27270104
ECLASS 12.0	27274301
ETIM 5.0	EC002544
ETIM 6.0	EC002544
ETIM 7.0	EC002544
ETIM 8.0	EC002544
UNSPSC 16.0901	39122230

Installation note

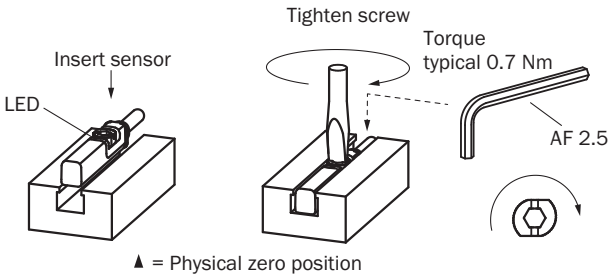

Connection diagram

Cd-539

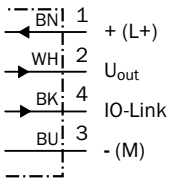

Dimensional drawing (Dimensions in mm (inch))

Cable

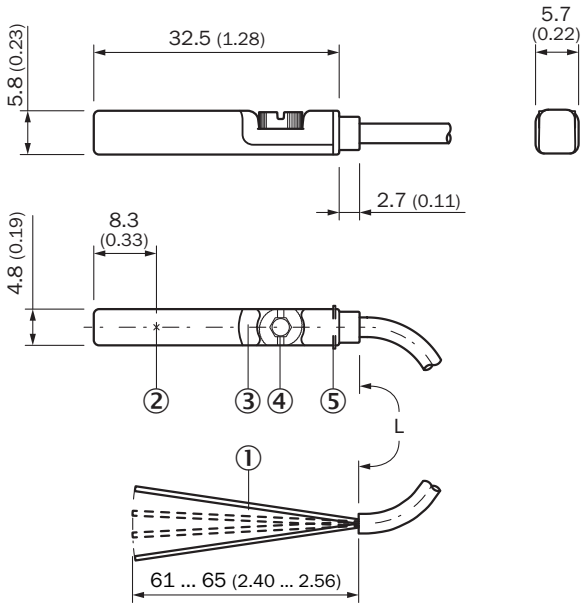

① Connection
② Physical zero position
③ Display LED
④ Fixing screw SW 2.5
⑤ Retaining ribs

Recommended accessories

Other models and accessories ➜ www.sick.com/MPS-M

	Brief description	Type	Part no.
Connection modules			
	IO-Link V1.1 Class A port, USB2.0 port, optional external power supply 24V / 1A	IOLA2US-01101 (SiLink2 Master)	1061790
Brackets for cylinder sensors			
	Mounting bracket for cylinder with dovetail slot, Aluminum, without mounting hardware	BEF-KHZ-ST1	2022703
	Mounting bracket for integrated profile cylinder/tie-rod cylinder, zinc diecast, mounting hardware included	BEF-KHZ-PT1	2022702
	1 piece, Mounting bracket on round body cylinder with piston diameter of 12 mm, ambient temperature min 0 °C max 50 °C, plastic, Aluminum	BEF-KHZ-RT-12	2077681
	1 piece, Mounting bracket on round body cylinder with piston diameter of 16 mm, ambient temperature min 0 °C max 50 °C, plastic, Aluminum	BEF-KHZ-RT-16	2077680
	1 piece, Mounting bracket on round body cylinder with piston diameter of 20 mm, ambient temperature min 0 °C max 50 °C, plastic, Aluminum	BEF-KHZ-RT-20	2077679

	Brief description	Type	Part no.
	1 piece, Mounting bracket on round body cylinder with piston diameter of 25 mm, ambient temperature min 0 °C max 50 °C, plastic, Aluminum	BEF-KHZ-RT-25	2077678
	1 piece, Mounting bracket on round body cylinder with piston diameter of 32 mm, ambient temperature min 0 °C max 50 °C, plastic, Aluminum	BEF-KHZ-RT-32	2077677
	1 piece, Mounting bracket on round body cylinder with piston diameter of 40 mm, ambient temperature min 0 °C max 50 °C, plastic, Aluminum	BEF-KHZ-RT-40	2077676
	1 piece, Mounting bracket on round body cylinder with piston diameter of 50 mm, ambient temperature min 0 °C max 50 °C, plastic, Aluminum	BEF-KHZ-RT-50	2077675
	1 piece, Mounting bracket on round body cylinder with piston diameter of 63 mm, ambient temperature min 0 °C max 50 °C, plastic, Aluminum	BEF-KHZ-RT-63	2077674
	1 piece, Mounting bracket on round body cylinder with piston diameter of 8 mm ... 130 mm, ambient temperature min –30 °C max 80 °C, stainless steel, Zinc cast	BEF-KHZ-RT1-130	2077684
	1 piece, Mounting bracket on round body cylinder with piston diameter of 8 mm ... 25 mm, ambient temperature min –30 °C max 80 °C, stainless steel, Zinc cast	BEF-KHZ-RT1-25	2077682
	1 piece, Mounting bracket on round body cylinder with piston diameter of 8 mm ... 63 mm, ambient temperature min –30 °C max 80 °C, stainless steel, Zinc cast	BEF-KHZ-RT1-63	2077683
	Mounting bracket for mounting on SMC rails CDQ2 (T-slot), Aluminum, without mounting hardware	BEF-KHZ-TT2	2046440
	Mounting bracket for mounting on SMC rails ECDQ2 (T-slot), Aluminum, without mounting hardware	BEF-KHZ-TT1	2046439
Device protection (mechanical)			
	Protective adapter, die-cast zinc, mounting hardware included	BEF-SG-MRZT	2077201
Sensor Integration Gateway			
	• **Further functions:** Web server integrated, IIoT interface available (dual talk) • **Logic editor:** no • **Communication interface:** IO-Link, Ethernet, PROFINET, REST API, MQTT, OPC UA • **Product category:** IO-Link Master	SIG350-0004AP100	6076871
	• **Further functions:** Web server integrated, IIoT interface available (dual talk) • **Logic editor:** no • **Communication interface:** IO-Link, Ethernet, EtherNet/IP™, REST API, MQTT, OPC UA • **Product category:** IO-Link Master	SIG350-0005AP100	6076923
	• **Further functions:** Web server integrated, IIoT interface available (dual talk) • **Logic editor:** no • **Communication interface:** IO-Link, Ethernet, EtherCAT®, REST API, MQTT, OPC UA • **Product category:** IO-Link Master	SIG350-0006AP100	6076924
	• **Further functions:** Web server integrated, USB connection for easy configuration of the SIG200 Sensor Integration Gateway with SOPAS ET, the engineering tool from SICK, logic editor is available for easy configuration of logic functions • **Connection CONFIG:** 1 x M8, 4-pin female connector, USB 2.0 (USB-A) • **Logic editor:** yes • **Communication interface:** IO-Link, USB, Ethernet, PROFINET, REST API • **Product category:** IO-Link Master	SIG200-0A0412200	1089794

	Brief description	Type	Part no.
	• **Description:** The SIG200 Sensor Integration Gateway is an IO-Link master with 4 configurable ports through which the IO-Link devices or standard inputs or standard outputs can be connected to a PLC or cloud application using the REST API. • **Further functions:** Web server integrated, USB connection for easy configuration of the SIG200 Sensor Integration Gateway with SOPAS ET, the engineering tool from SICK, logic editor is available for easy configuration of logic functions • **Connection CONFIG:** 1 x M8, 4-pin female connector, USB 2.0 (USB-A) • **Logic editor:** yes • **Communication interface:** IO-Link, USB, Ethernet, EtherNet/IP™, REST API • **Product category:** IO-Link Master	SIG200-0A0512200	1089796
	• **Further functions:** Web server integrated, USB connection for easy configuration of the SIG200 Sensor Integration Gateway with SOPAS ET, the engineering tool from SICK, logic editor is available for easy configuration of logic functions • **Connection CONFIG:** 1 x M8, 4-pin female connector, USB 2.0 (USB-A) • **Logic editor:** yes • **Communication interface:** IO-Link, USB, Ethernet, REST API • **Product category:** IO-Link Master	SIG200-0A0G12200	1102605

SICK AT A GLANCE

SICK is one of the leading manufacturers of intelligent sensors and sensor solutions for industrial applications. A unique range of products and services creates the perfect basis for controlling processes securely and efficiently, protecting individuals from accidents and preventing damage to the environment.

We have extensive experience in a wide range of industries and understand their processes and requirements. With intelligent sensors, we can deliver exactly what our customers need. In application centers in Europe, Asia and North America, system solutions are tested and optimized in accordance with customer specifications. All this makes us a reliable supplier and development partner.

Comprehensive services complete our offering: SICK LifeTime Services provide support throughout the machine life cycle and ensure safety and productivity.

For us, that is "Sensor Intelligence."

WORLDWIDE PRESENCE:

Contacts and other locations –www.sick.com

SICK
Sensor Intelligence.