Product datasheet

Specifications

Green Premium™

Easy TeSys control relay - 3 NO + 1 NC <= 690 V - 240 VAC

CAE31U5

Main

Range	Easy TeSys
Range of product	Easy TeSys Control Relay
Product or component type	Control relay
Device short name	CAE
contactor application	Control circuit
Colour	Grey (RAL 7011)

Complementary

Utilisation category	AC-14 AC-15
Pole contact composition	3 NO + 1 NC
[Ue] rated operational voltage	<= 690 V AC
Control circuit type	AC at 50 Hz
[Uc] control circuit voltage	240 V AC 50 Hz
[Uimp] rated impulse withstand voltage	6 kV conforming to IEC 60947
[Ith] conventional free air thermal current	10 A (at 40 °C)
Irms rated making capacity	140 A at 690 V AC conforming to IEC 60947-5-1
[Icw] rated short-time withstand current	120 A - 500 ms 140 A - 100 ms
Associated fuse rating	10 A gG at 690 V conforming to IEC 60947-5-1
[Ui] rated insulation voltage	690 V conforming to IEC 60947-5-1
mounting support	Plate Rail
Connections - terminals	Screw clamp terminals 1 1…2.5 mm² - cable stiffness: flexible without cable end Screw clamp terminals 2 1…2.5 mm² - cable stiffness: flexible without cable end Screw clamp terminals 1 1…2.5 mm² - cable stiffness: flexible with cable end Screw clamp terminals 2 1…2.5 mm² - cable stiffness: flexible with cable end Screw clamp terminals 1 1…2.5 mm² - cable stiffness: solid without cable end Screw clamp terminals 2 1…2.5 mm² - cable stiffness: solid without cable end
Recommended tightening torque	1.2 N.m - on screw clamp terminals - with screwdriver Philips No 2
Control circuit voltage limits	Operational: 0.85...1.1 Uc at 50 Hz Drop-out: 0.3...0.6 Uc
Operating time	4...19 ms coil energisation and NC opening 12...22 ms coil energisation and NO closing 4...12 ms coil de-energisation and NC opening 6...17 ms coil de-energisation and NO closing
Mechanical durability	10 Mcycles

Disclaimer: This documentation is not intended as a substitute for and is not to be used for determining suitability or reliability of these products for specific user applications

Maximum operating rate	180 cyc/mn
Inrush power in VA	70 VA 50 Hz (at 20 °C)
Hold-in power consumption in VA	8 VA 50 Hz (at 20 °C)
Minimum switching voltage	17 V
Minimum switching current	5 mA
Non-overlap time	1.5 ms on energisation between NC and NO contact 1.5 ms on de-energisation between NC and NO contact
Insulation resistance	> 10 MOhm
Mechanical robustness	Shocks control relay open: 7 Gn for 11 ms Shocks control relay closed: 10 Gn for 11 ms Vibrations control relay open: 1.5 Gn, 5...300 Hz Vibrations control relay closed: 3 Gn, 5...300 Hz
Height	74 mm
Width	45 mm
Depth	80 mm
Net weight	0.28 kg

Environment

Standards	IEC 60947-5-1
product certifications	GOST
IP degree of protection	IP2X conforming to IEC 60529
Protective treatment	TH conforming to IEC 60068
Ambient air temperature for operation	-20…70 °C
Ambient air temperature for storage	-60…80 °C
Operating altitude	3000 m without derating

Packing Units

Unit Type of Package 1	PCE
Number of Units in Package 1	1
Package 1 Height	8.7 cm
Package 1 Width	5.2 cm
Package 1 Length	7.5 cm
Package 1 Weight	305.0 g
Unit Type of Package 2	S02
Number of Units in Package 2	36
Package 2 Height	15.0 cm
Package 2 Width	30.0 cm
Package 2 Length	40.0 cm
Package 2 Weight	11.435 kg
Unit Type of Package 3	PAL
Number of Units in Package 3	576
Package 3 Height	60.0 cm
Package 3 Width	80.0 cm

Package 3 Length	576.0 cm
Package 3 Weight	175.68 kg

Contractual warranty

Warranty	18 months

Sustainability

Green Premium™ label is Schneider Electric's commitment to delivering products with best-in-class environmental performance. Green Premium promises compliance with the latest regulations, transparency on environmental impacts, as well as circular and low-CO_2 products.

Guide to assessing product sustainability is a white paper that clarifies global eco-label standards and how to interpret environmental declarations.

Learn more about Green Premium >

Guide to assess a product's sustainability >

Transparency RoHS/REACh

Well-being performance

Reach Free Of Svhc	
Toxic Heavy Metal Free	
Mercury Free	
Rohs Exemption Information	Yes

Certifications & Standards

Reach Regulation	REACh Declaration
Eu Rohs Directive	Compliant EU RoHS Declaration
China Rohs Regulation	China RoHS declaration Pro-active China RoHS declaration (out of China RoHS legal scope)
Environmental Disclosure	Product Environmental Profile
Weee	The product must be disposed on European Union markets following specific waste collection and never end up in rubbish bins
Circularity Profile	End of Life Information

Offer Marketing Illustration

Product benefits / Features

Offer Marketing Illustration

Product benefits / Features

Offer Marketing Illustration

Product benefits / Features

Technical Illustration
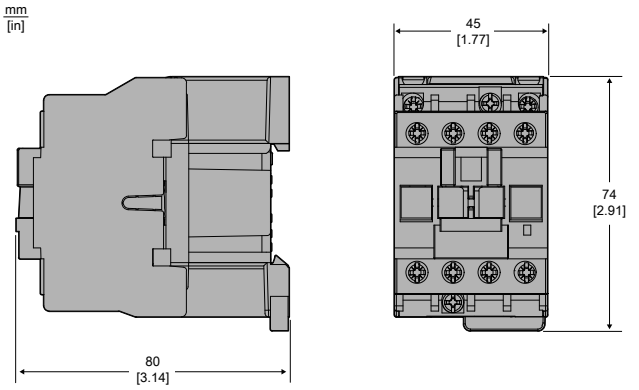
Assembly's dimensions