⚠ Safety Precautions

- Important Notes on exporting this product or equipment containing this product;
  If the end-user or application of this product is related to military affairs or weapons, its export may be controlled by “Foreign Exchange and Foreign Trade Control Law” of Japan where export license will be required before product can be exported from Japan.
- This product is designed and manufactured for use in General Purpose Industrial Equipment and it is not intended to be used in equipment or system that may cause personal injury or death.
- All servicing such as installation, wiring, operation, maintenance and etc., should be performed by qualified personnel only.
- Tighten mounting screws with an adequate torque by taking into consideration strength of the screws and the characteristics of material to which the product will be mounted. Over tightening can damage the screw and/or material; under tightening can result in loosening.
- Install safety equipment to prevent serious accidents or loss that is expected in case of failure of this product.
- Consult us before using this product under such special conditions and environments as nuclear energy control, aerospace, transportation, medical equipment, various safety equipments or equipments which require a lesser air contamination.
- We have been making the best effort to ensure the highest quality of our products, however, some applications with exceptionally large external noise disturbance and static electricity, or failure in input power, wiring and components may result in unexpected action. It is highly recommended that you make a fail-safe design and secure the safety in the operative range.
- If the motor shaft is not electrically grounded, it may cause an electrolytic corrosion to the bearing, depending on the condition of the machine and its mounting environment, and may result in the bearing noise. Checking and verification by customer is required.
- Failure of this product depending on its content may generate smoke of about one cigarette. Take this into consideration when the application of the machine is clean room related.
- Please be careful when using the product in an environment with high concentrations of sulfur or sulfuric gases, as sulfuration can lead to disconnection from the chip resistor or a poor contact connection.
- Do not input a supply voltage which significantly exceeds the rated range to the power supply of this product. Failure to heed this caution may lead to damage of the internal parts, causing smoke and/or fire and other troubles.
- The user is responsible for matching between machine and components in terms of configuration, dimensions, life expectancy, characteristics, when installing the machine or changing specification of the machine. The user is also responsible for complying with applicable laws and regulations.
- Manufacturer’s warranty will be invalid if the product has been used outside its stated specifications.
- Component parts are subject to minor change to improve performance.
- Read and observe the instruction manual to ensure correct use of the product.

Repair	Consult to the dealer from whom you have purchased this product for details of repair work. When the product is incorporated to the machine you have purchased, consult to the machine manufacturer or its dealer.
URL	Electronic data of this product (Instruction Manual, CAD data) can be downloaded from the following web site; industrial.panasonic.com/ac/e/

●Contact to : ——————————————

Panasonic
INDUSTRY

Panasonic Industry Co., Ltd.,
Industrial Device Business Division
1-1 Morofuku 7-chome, Daito, Osaka 574-0044, Japan

Panasonic Industrial Search

© Panasonic Industry Co., Ltd.

Unauthorized reproduction from this document is strictly prohibited.

■AQCTB0100E-2 202303-y

2023.3

2023 / 3

Panasonic
INDUSTRY

AC Servo Motor & Driver

MINAS A6 Family
MINAS E series

IN Better Solution



2023.3

● This product is for industrial equipment. Don't use this product at general household.

MINAS A6 Family



More compact, more faster and more easy-to-use Servomotors that meet the demands of the present age.

The MINAS A6 family of advanced AC servomotors is changing the landscape of industrial machinery.

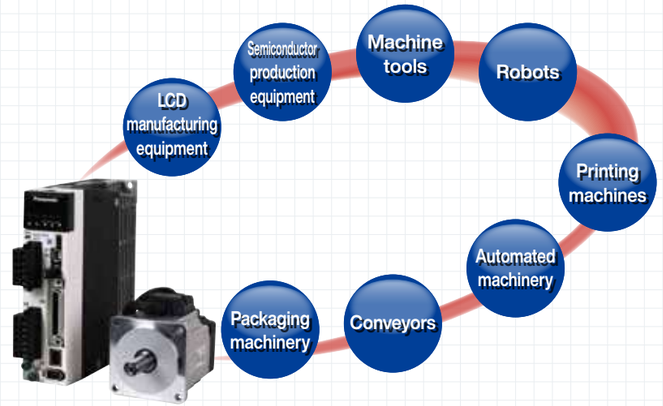

Robots

A robot is required to operate stably despite arm posture and position, workload and other conditions changing from moment to moment. The MINAS A6 family assures stable operation by suppressing effects of load to a minimum using “adaptive load control.”



Processing machinery

With metal processing machine, it is very difficult to render mirror-like finishing on a polygonal body.
The A6 family realizes “3.2 kHz frequency response” to improve feedback responsiveness, thus enabling mirror surfacing without generating lines or streaks.

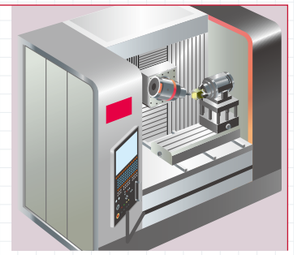

Component mounting machines

The A6 family also shows its versatility when used with a component mounting machine where speed and positional accuracy are demanded. In addition to high frequency response, it can process accidental disturbances with the help of built-in “adaptive load control,” thus maintaining high productivity.

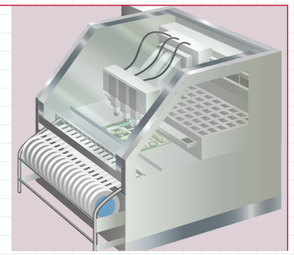

INDEX

A6 Family

A6 Family Line-up 3
Motor Features 9
Driver Features 11
Protective Features 13
Other Driver Functions 13
Setup Support Software 15
Network servo driver 17
Servo motor with battery-less absolute encoder 19
Compliance with International Standards 20
Motor Line-up 21
Model Designation 22
Overall Wiring 23
Applicable Peripheral Devices 27
Table of Part Numbers and Options 29

Driver
- Driver Specifications 43
  - A6SF series 43
  - A6SG series and A6SE series 45
- Wiring Diagram 47
  - Wiring to the connector XA, XB, XC, and Terminal Block 47
- Safety Function 51
  - Wiring to the Connector, X3 51
- Control Circuit Diagram 52
  - Wiring to the Connector, X4 52
  - Wiring to the Connector, X5 54
  - Wiring to the Connector, X6 55
  - Dimensions of Driver 57

Motor
- Motor Specifications 62
  - Motor Dimensions 119
  - Special Order Product 203
  - Motors with Gear Reducer 293
  - Motor Specification Description 303

Options
- Specifications of Motor connector 307
- Encoder Cable 309
- Motor Cable 313
- Brake Cable 321
- Interface Cable 322
- Connector Kit 323
- Battery for Absolute Encoder 338
- Surge Absorber for Motor Brake 339
- Mounting Bracket 340
- Reactor 342
- External Regenerative Resistor 343
- Daisy Chain 345
- Cable part No. Designation 346
- List of Peripheral Devices Manufacturers 347

A6N series 349

A6B series 369

E series 377

Information 408
- Index 448
- Sales Office of Overseas 462

Servomotors that flexibly and effectively fit into various system configurations MINAS A6 Family

Controller



●For compatible controllers, see our website or request the necessary information separately.

Modbus network (Block operation position control)

Pulse train position command (Block operation position control by external I/O)

Analog velocity control

Analog torque control





●For compatible controllers, see our website or request the necessary information separately.

RTEX Realtime Express



●For compatible controllers, see our website or request the necessary information separately.

EtherCAT®

Driver



Basic type

A6SE series



RS485 communication type

A6SG series



Multifunction type

A6SF series



Standard type

A6NE series



Multifunction type

A6NF series



Standard type

A6BE series

Special order product



Multifunction type

A6BF series

Special order product

Motor



MSMF
Low inertia



MDMF
Middle inertia



MQMF
Middle inertia/
Flat type



MGMF
Middle inertia/
Low speed high torque



MHMF
High inertia



MQMF
with gear reducer



MHMF
with gear reducer

Special order product For more information, visit the website or please request to our distributors separately.

Slim design and position control type

E series



- Ultra-small design and pulse train command type only, DIN-rail mountable (using mounting Kit)
- Rated output: 50 W to 400 W

MINAS A6 DC24 V / DC48 V type Special order product



- DC24 V / DC48 V power supply
- Rated output :
  DC24 V: 50 W
  100 W
  133 W
  DC48 V: 50 W
  100 W
  133 W
  266 W

Dual-axis servo driver Special order product



RTEX Realtime Express

- Reduced wiring by dual-axis integration
- Supports both rotary motors and linear / DD motors
- Rated output :
  Max.200 W ×2-axis
  Max.400 W ×2-axis
  Max.750 W ×2-axis
  Max.1 kW × 2-axis

It is MINAS A6 Family lineup that meets the manufacturing industry needs. MINAS A6 Family

Motor line-up

		50 W	100 W	200 W	400 W	750 W	850 W	1000 W	1.0 kW	1.3 kW	1.5 kW	1.8 kW	2.0 kW	2.4 kW	2.9 kW	3.0 kW	4.0 kW	4.4 kW	5.0 kW	5.5 kW	7.5 kW	11.0 kW	15.0 kW	22.0 kW
Low inertia MSMF	100 V	38 sq.	38 sq.	60 sq.	60 sq.																			
	Rated rotational speed (Maximum rotational speed)	3000 r/min(6000 r/min)																						
	200 V	38 sq.	38 sq.	60 sq.	60 sq.	80 sq.		80 sq.	100 sq.		100 sq.		100 sq.			120 sq.	130 sq.		130 sq.					
	Rated rotational speed (Maximum rotational speed)	3000 r/min(6000 r/min)							3000 r/min(5000 r/min)				3000 r/min(5000 r/min)											
	400 V (Under development)								100 sq.		100 sq.		100 sq.			120 sq.	130 sq.		130 sq.					
	Rated rotational speed (Maximum rotational speed)								3000 r/min(5000 r/min)				3000 r/min(5000 r/min)											
Middle inertia/Flat type MQMF	100 V		60 sq. G	80 sq. G	80 sq. G																			
	Rated rotational speed (Maximum rotational speed)		3000 r/min(6500 r/min)																					
	200 V		60 sq. G	80 sq. G	80 sq. G																			
	Rated rotational speed (Maximum rotational speed)		3000 r/min(6500 r/min)																					
Middle inertia MDMF	200 V								130 sq.		130 sq.		130 sq.			130 sq.	176 sq.		176 sq.		176 sq.	220 sq.	220 sq.	220 sq.
	Rated rotational speed (Maximum rotational speed)								2000 r/min(3000 r/min)				2000 r/min(3000 r/min)								1500 r/min *1	1500 r/min(2000 r/min)		
	400 V (Under development)								130 sq.		130 sq.		130 sq.			130 sq.	176 sq.		176 sq.		176 sq.	220 sq.	220 sq.	220 sq.
	Rated rotational speed (Maximum rotational speed)								2000 r/min(3000 r/min)				2000 r/min(3000 r/min)								1500 r/min *1	1500 r/min(2000 r/min)		
Middle inertia/Low speed high torque MGMF	200 V					130 sq.		130 sq.				130 sq.		176 sq.	176 sq.			176 sq.		176 sq.				
	Rated rotational speed (Maximum rotational speed)					1500 r/min(3000 r/min)						1500 r/min(3000 r/min)												
	400 V (Under development)					130 sq.		130 sq.				130 sq.		176 sq.	176 sq.			176 sq.		176 sq.				
	Rated rotational speed (Maximum rotational speed)					1500 r/min(3000 r/min)						1500 r/min(3000 r/min)												
High inertia MHMF	100 V	40 sq.	40 sq. G	60 sq. G	60 sq. G																			
	Rated rotational speed (Maximum rotational speed)		3000 r/min(6500 r/min)																					
	200 V	40 sq.	40 sq. G	60 sq. G	60 sq. G	80 sq. G		80 sq.	130 sq.		130 sq.		176 sq.			176 sq.	176 sq.		176 sq.		176 sq.			
	Rated rotational speed (Maximum rotational speed)		3000 r/min(6500 r/min)			3000 r/min(6000 r/min)			2000 r/min(3000 r/min)				2000 r/min(3000 r/min)								1500 r/min *1			
	400 V (Under development)			60 sq.	60 sq.	80 sq.		80 sq.	130 sq.		130 sq.		176 sq.			176 sq.	176 sq.		176 sq.		176 sq.			
	Rated rotational speed (Maximum rotational speed)			3000 r/min(6500 r/min)		3000 r/min(6000 r/min)			2000 r/min(3000 r/min)				2000 r/min(3000 r/min)								1500 r/min *1			

Table description

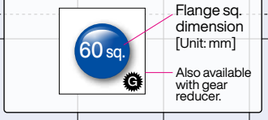

*1 Maximum rotational speed is 3000 r/min.

It is MINAS A6 Family lineup that meets the manufacturing industry needs. MINAS A6 Family

Driver line-up

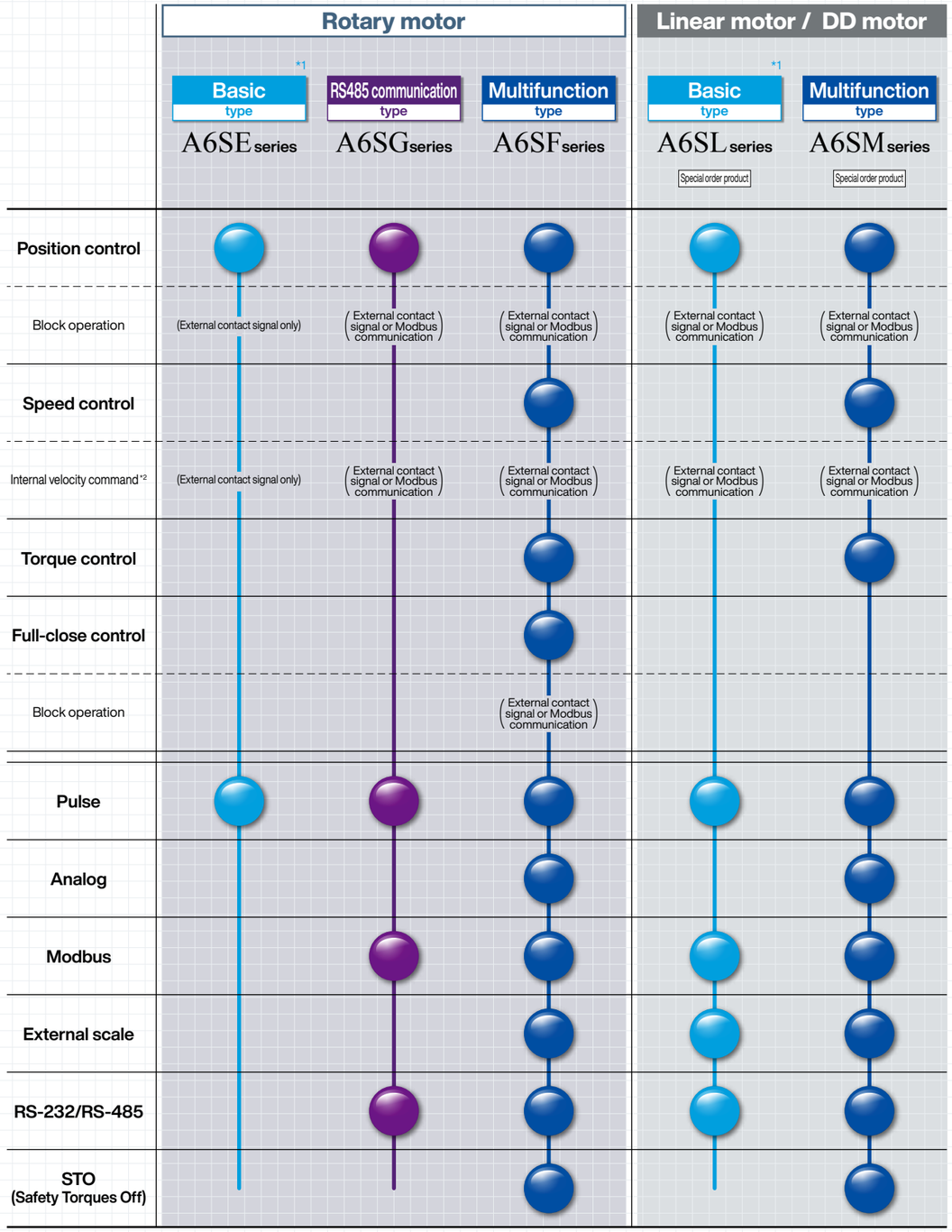

*1 A6SE series driver (Position control only) does not correspond to the absolute system of using the serial communication with the host device. It supports incremental system only.
*2 When using internal speed command with Modbus, external servo ON is required.

High speed communication For Realtime Express Network servo driver ▶ For Details see P.349

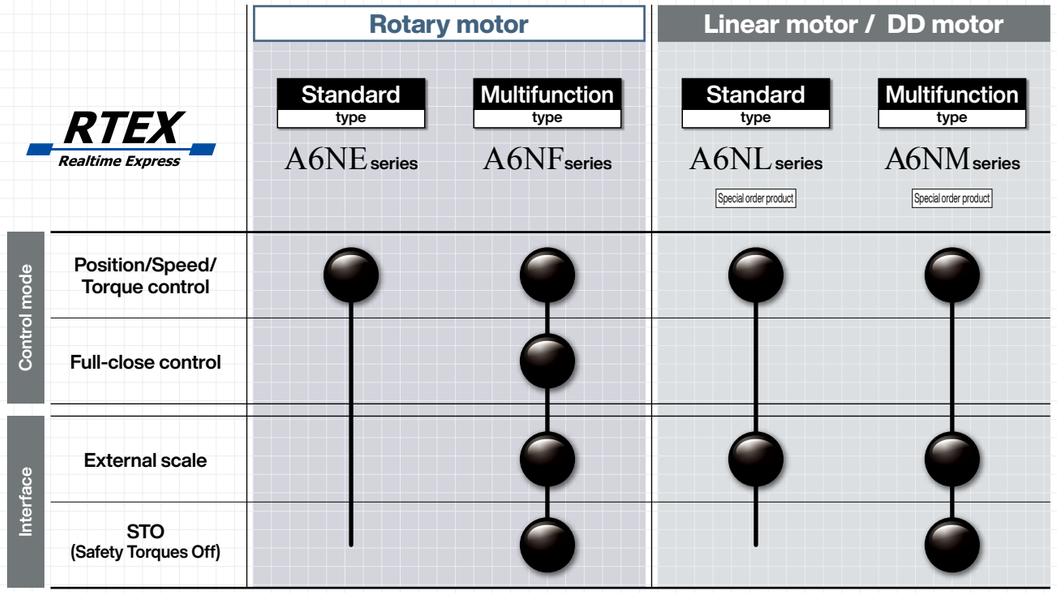

Servo drivers with EtherCAT open network ▶ For Details see P.369

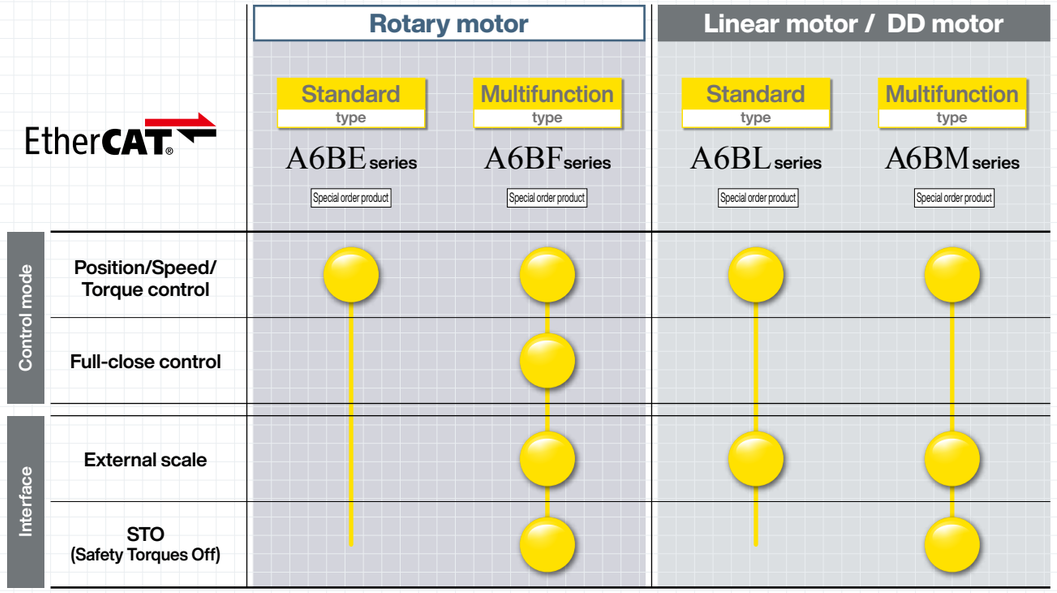

● Please check the instruction manual for necessary wiring.
Special order product For more information, please visit our website or request to our distributors separately.

Small, light, powerful and speedy ※1

MINAS A6 Family

● Size of a typical business card (W90 mm × H55 mm)



High-speed, high-torque, compact and lightweight. ※1

Max. speed	Max. torque	Overall length	Weight
6500 r/min ※2	Approx. 350 % ※2	67.5 mm ※2	750 g ※2
Fast	High	Short	Light
A5Family ※3 5000 r/min	A5Family ※3 Approx 300 %	A5Family ※3 99.0 mm	A5Family ※3 960 g

※1 Middle and high inertia types only ※2 MHMF200 W ※3 MHMD200 W

Thanks to high-speed and high-torque, the application area is greatly expanded.

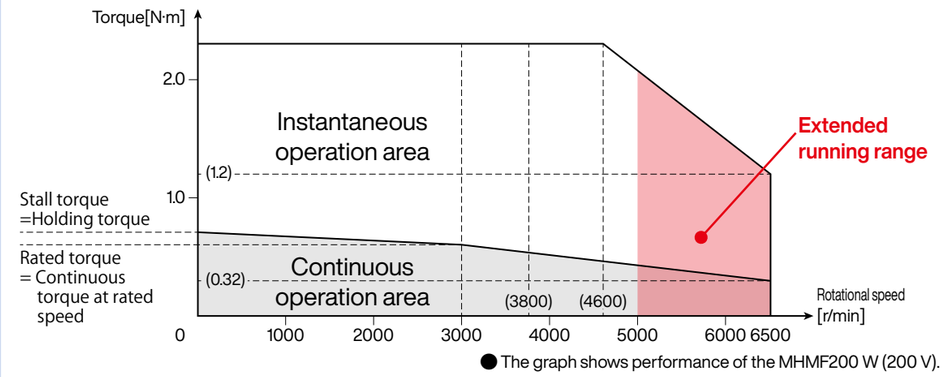

● The graph shows performance of the MHMF200 W (200 V).

Enhanced position detecting resolution enables smoother and more precise positioning.

Encoder		Communication speed		
23 bit (8388608 Pulse / rotation)		5 Mbps		
8 times higher resolution	+	Improved	=	Low vibrations High speed and high precision positioning
(A5 Family ※4 20 bit)		(A5 Family 2.5 Mbps)		

※4 Incremental encoder

Swifter, smarter and easier to use

MINAS A6 Family

Powered Up compact driver



New two-degree-of-freedom control system

Frequency response 3.2 kHz

Built-in filters and adjusting functions

PANATERM Support

Modbus Support (A6SF、A6SG Series)

Block operation position control (Supports Modbus and external I/O)

Full-scale



Image of block operations

Servo on
Instruct the Operation block No.

Block No.0 Run	Block No.10 Run	Block No.100 Run
Block No.1 Run	Block No.11 Run	Block No.200 Run
Block No.2 Run	Block No.12 Run	Block No.255 Run

High-speed response, high-precision positioning for quick and accurate movement

Our proprietary algorithm in addition to upgraded CPU and other hardware realized further high-speed response. Furthermore, high-precision positioning is achieved by automatically eliminating micro vibrations and machine oscillation caused by the resonance.

● **Comparison of position setting waveforms**

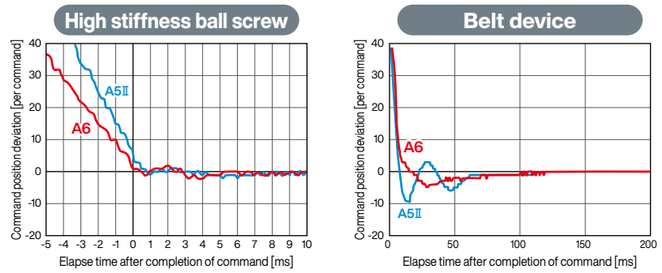

Example of operation with processing machine

A mirror finish is obtained even if a process that tends to cause streaking.

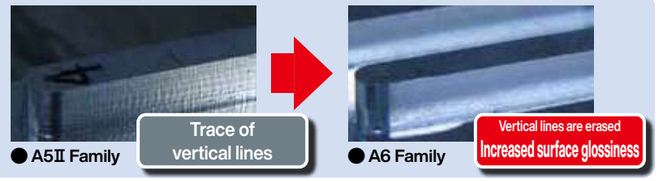

● A5Ⅱ Family ● A6 Family

Easy and quick setting, shortening conventional settling time by approx. 64%.※1

Newly developed fit gain function substantially reduces adjustment time. Adaptive notch filter and various gains can be automatically set and adjusted.

※1 Comparison with conventional product A5Ⅱ Family

■**Settling time**
(Measured on low stiffness resonant mechanism)

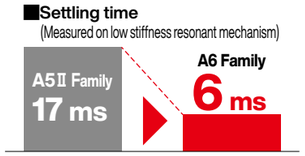

Ball screw settling time **0 ms**

Belt device settling time **4 ms**

● The above is a measure based on our test environment

Adjustment completed in only 3 processes

① Condition setting → ② Measurement → ③ Result determination

Load Stiffness
Command response

● **Fit gain adjustment window**

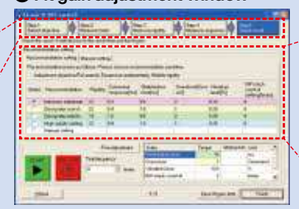

● **Automatically proposes various settings**



Realized 3.2 kHz frequency response to improve productivity

Realizes 3.2 kHz frequency response. At 139% that of conventional models *1, it enables high-speed operation and improves productivity.

※1 Comparison with conventional product A5Ⅱ Family

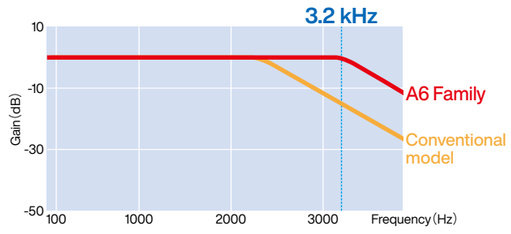

Reduced maintenance work and trouble.

MINAS A6 Family

Lineup of motors protected by high dust-proof, high heat-resistant oil seal (With protective lip)

Motors protected by a highly dust-proof, oil-tight oil seal (with protection lip) have been added to the lineup of motor products equipped with oil seals of conventional specifications. The oil seals of this type of motor are made of a material of higher heat resistance.

You can select appropriate motor type according to your application environment such as dusty, powdery or gear connection necessity.

- Oil-seals (with protective lip) are not available for MSMF motors with flange size 80 mm or smaller.
- MQMF and MHMF motors with flange size of 80 mm or smaller provided with oils seals (with protective lip) are not mounting-compatible with A5 Family models.

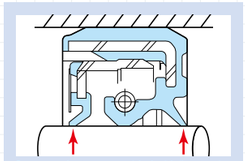

Some products are provided with "protective lip" that prevents dust and oil penetration.

■ **Applicable oil seals**

Flange size	Motor type	With oil seal		With oil seal (with protective lip)		
80 mm or less	MSMF	◎	Made of nitrile rubber (NBR)	No setting		
	MHMF, MQMF	◎		◎	Made of fluororubber	Not mounting-compatible with A5 Family products
100 mm or more	All Type	◎		◎		Mounting-compatible with A5 Family products

IP67 enclosure rating (Motors with flange size of 80 mm or smaller are order-made products)

Direct-mount connectors are used for the motor power supply and encoder input and output to improve sealing performance of the motor to IP67.

- IP67-compatible motors with flange size of 80 mm or smaller are order-made products.
- For environmental conditions of applications, refer to P.303.

What is IP?

An international standard that specifies the degree of dustproof and waterproof performance. (IP: Ingress Protection)

IP-67

- 6: Dust-tight type: Totally protected against dust penetration.
- 7: Protected against water penetration when immersed in water for the specified period of time and under the specified pressure.



Lifespan diagnosis / degradation diagnosis

It warns expected lifetime of the motor & driver, and deterioration limit of the equipment.

Geared servomotor

The geared servomotor lineup is also added.

Other driver functions

Adaptive load control

Adaptive load control automatically sets the best suitable gain table in response to fluctuations in inertia caused by changes in workload, thus keeping machines operating stably at all times.

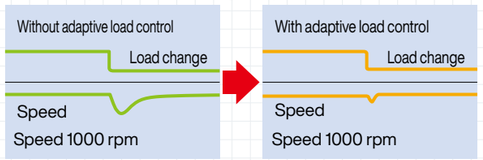

Friction torque compensation

This function reduces the effect of machine related friction and improves responsiveness. Three kinds of friction compensation can be set: unbalanced load compensation, which sets an offset torque that is constantly applied; kinetic friction compensation, which changes direction in response to the direction of movement; and viscous friction compensation, which changes according to the speed command.

Manual/Auto damping filter

Equipped with a damping filter that is automatically set through the setup support software.This filter removes the natural vibration frequency component from the command input, greatly reducing vibration of the axis when stopping. The number of filters for simultaneous use has been increased to three from the conventional two filters. (Two from one in the two-degree-of-freedom-control mode.) The adaptive frequency has also been significantly expanded from 0.5 Hz to 300 Hz.

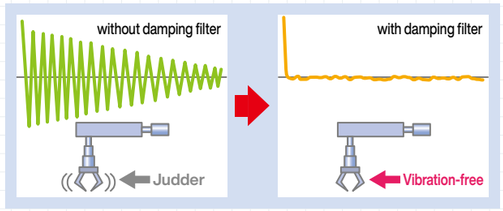

Manual/Auto notch filter

Equipped with auto-setting notch filters for greater convenience. Now there is no need to measure troublesome vibration frequencies.

Our notch filters automatically detect vibration and provide simple auto-setting. These notch filters greatly reduce noise and vibration caused by equipment resonance and respond quickly.

The A6 Family is equipped with 5 notch filters with frequencies settable from 50 Hz to 5000 Hz. Depth can be individually adjusted within this range. (Two of the filters share automatic settings.)

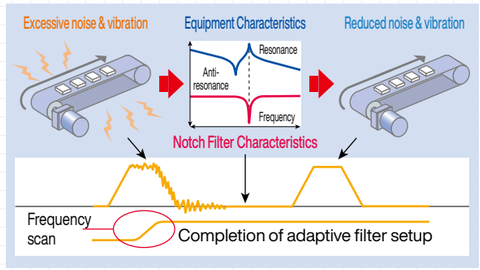

Block operation function

256 block patterns can be created. Easy control is possible because the instruction can be given to block No. by Modbus (RS232, RS485) or interface (IO) signal.

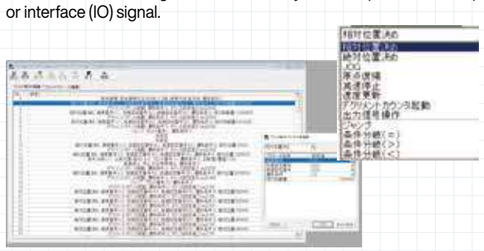

3-step gain

A 3-step gain switch is available in addition to the normal gain switch.This chooses appropriate gain tunings at both stopping and running. The 3-step gain switch gives you choices of 3 different tunings for normal running, stopping for faster positioning and at stopping. The right gaining tunings achieve lower vibration and quicker positioning time of your application.

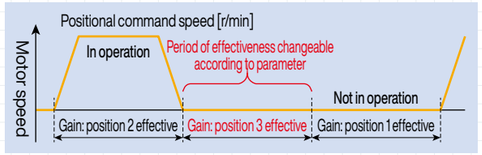

Inertia ratio conversion

You can adjust right inertia ratio by Inertia ratio conversion input (J-SEL) of interface. When you have significant load inertia changes, it can adjust unbalanced speed and position gain turning combination.It ends up quicker response of your system.

Input/output signal assignment

You can use the parameters to arbitrarily allocate the universal 10 inputs and 6 outputs. (Inputs can be selected as either A contacts or B contacts). The Panaterm setup software provides an exclusive screen for a more simplified setup.

Torque limiter switching

These can be used for applications such as simplified pressure, tension control, and sensor-less homing.

Supports semi-/full-closed loop (8 Mpps input pulse, 4 Mpps output pulse) control.

Supports full-closed loop control. The A6SF series accommodates a command input of 8 Mpps and feedback output of 4 Mpps, enabling high-resolution, high-speed operation.Supports the industry's leading positioning resolution commands (pulse-train commands).

- The A6SE and A6SG series do not support full-closed loop control.
- Applicable scale: AB-phase feedback scale (general purpose product) and serial feedback scale (dedicated to Panasonic format product)

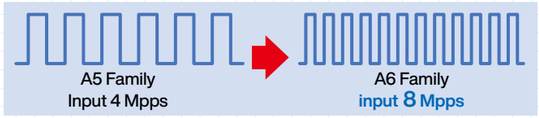

Dynamic braking

With parameter settings, you can select dynamic braking, which shorts servomotor windings U, V and W at Servo-OFF, during positive direction/ negative direction, and during power shutdown and tripping of the circuit breaker for over travel inhibition.

- The desired action sequence can be set up to accommodate your machine requirements.

Inrush current preventive function

This driver is equipped with a rush current preventive resistor to prevent the circuit breaker from shutting off the power supply as a result of inrush current occurring at power-on.

Parameter initialization

Using the front panel or by connecting a PC, you can restore the parameters to the factory settings.

Regenerative energy discharge

A regenerative resistor is used to discharge regenerative energy, which is the energy generated when stopping a load with a large moment of inertia or when using this unit in vertical operation. This energy is returned to the driver from the motor.

- Frame A, and frame B model drivers do not contain a regenerative resistor. Optional regenerative resisters are recommended.
- Frame C to frame F model drivers contain one regenerative resistor; however, adding an optional regenerative resistor provides additional regeneration capability.

Multifunctional software for quick adjustment support

MINAS A6 Family

PANATERM set-up support software

The PANATERM set-up support software, with many added features. The PANATERM assists users in setting parameters, monitoring control conditions, setup support, and analyzing mechanical operation data on the PC screen, when installed in a commercially available personal computer, and connected to the MINAS A6 Family through the USB interface. Choose either English, Japanese, Chinese, Korean-language display.

Please download from our web site and use after install to the PC.
https://industrial.panasonic.com/ww/products/motors-compressors/fa-motors/ac-servo-motors/minas-a5-panaterm

Setup wizard
This wizard supports fundamental settings in each control mode step by step, including reading of default setting. In On-line condition, Input data related to each step can be monitored in real time.

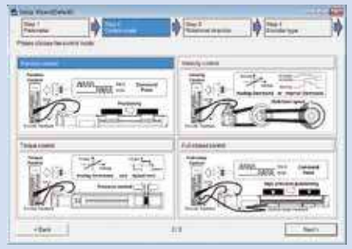

Trial run
This function supports positioning with the Z-phase search and software limit.

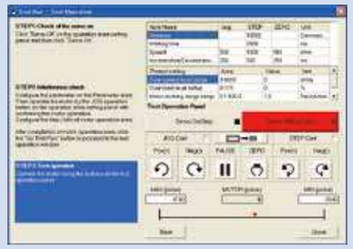

Frequency characteristics measurement function
Can check frequency response characteristics of the mechanism and motor. Since resonance frequency of the mechanism is measurable, it is effective for start-up time reduction.

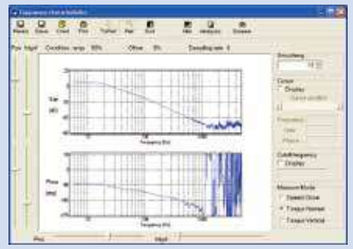

Service Life Prediction
The service life prediction function considers the internal temperature for main components such as the fan and condenser. If the rated value is exceeded, an alarm is displayed. This approach prevents unexpected suspension of operation and allows for planning of systemized maintenance.
Note: The life span prediction value should be considered as a guide only.

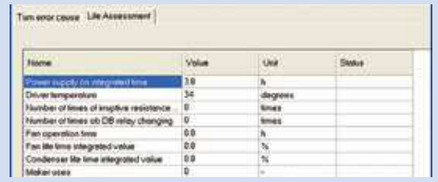

The fit gain function for setting Two-degree-of-freedom control.
1) Select the adjustment method 2) Load measurement
3) Confirming results Adjust gain to meet your needs



Fit gain
This function automatically searches the best suitable stiffness setting and mode and adjusts the gain once the target in-position range and setting time are set.

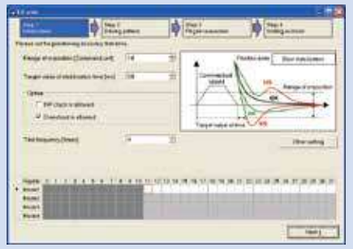

Encoder temperature monitor
The Encoder Temperature Monitor is a new function capable of real-time measurement of the interior temperature of the encoder, something that has been difficult to achieve in the past. It is valuable for monitoring the motor and can be used as a diagnostic in the event of a malfunction.



Deterioration diagnosis
From the equipment information that can be detected by the motor, it is possible to display and check the deterioration and aging status of the equipment.



Added New screen for gain adjustment, equipped with stiffness oscillation auto-reduction function

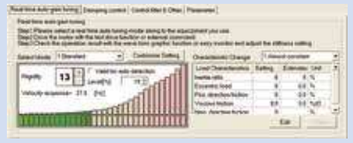

Significant increase of measuring objects Multi-functional waveform graphic

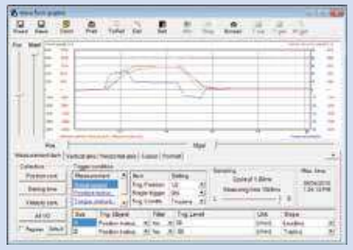

Other features It has convenient functions such as motor / driver information such as load factor, power supply voltage, driver temperature etc, logging function capable of recording interface recording, display function of non-rotating factors etc
● Deterioration diagnosis ● Block action editor / monitor (A6SE, A6SG, A6SF series) ● Battery refresh ● Object editor (A6BE, A6BF series)

• Hardware configuration

Personal computer	CPU	800 MHz or more
	Memory	System memory 512 MB or more Graphics memory 32 MB or more
	Hard disk capacity	Vacancy of 512MB or more recommended
	OS	Windows® Vista SP1 (32 bit), Windows® 7 (32 bit, 64 bit), Windows® 8 (32 bit, 64 bit), Windows® 10 (32 bit, 64 bit) Japanese, English, Chinese (Simplified), Korean version
	Serial communication function	USB port, COM port (Communication speeds: 2400 bps to 115200 bps) * A COM port is required to use RS232 communications. A 9600 bps or higher baud rate is recommended.
Display	Resolution	1024 × 768 pix or more
	Number of colors	24 bit colors (TrueColor) or more

<CAUTION> This software is applicable only to A5 Family, A6 Family. To apply this software to A, AIII, E or A4 series, consult our distributors.

Lineup of two types of network servo driver

MINAS A6 Family

Realtime Express(RTEX)

Ultimate **Real-time** performance

- Com. period min. **0.0625 ms**
- Com. speed **100 Mbps** Full-duplex
- Velocity response **3200 Hz**

Functionality to meet various needs

- Precise position latch & comparing
- Infinitely rotatable absolute encoder
- IEC safety I/F model available *1

*1 : Multi-functional type F. IEC61800-5-2 STO, IEC61508 SIL3.

RTEX Realtime Express

Simple network

- High-performance & Low-cost
- Isochronous established by ASIC
- Easy device development



Max **16000** times/s

MINAS A6N series

EtherCAT

High-Performance

- Frequency response: **3200 Hz**
- Supports network communication "**EtherCAT**".
- High-Speed **100 Mbps**
- Real-time auto tuning function, Anti-vibration filters are available.

EtherCAT®

High-functions

- **EtherCAT** with many supported applications
  <7 control modes, 32 hm methods, DC(Synch), SM2(Synch), FreeRUN (Non-synch)>
- System-up possible with various slaves.
- Supports PC-based controller.
- A6BL/A6BM (for Linear Motor) will be available soon.

Standards

- Official EtherCAT Conformance Tested model available.
- IEC safety I/F model available.*2

*2 : Supported by multifunction type. EN61800-5-2 STO, EN61508 SIL3.



Small size servo driver with EtherCAT

MINAS A6B series Special order product

Absolute system can be configured without the battery.

Battery-less absolute encoder motor

For details on the battery-less absolute encoder type, refer to the "MINAS A6 Family Battery-less Absolute Encoder Models" catalog.

Reduced the battery for the absolute encoder by installing the power generating element in the motor.
In addition to improving maintainability, we support the construction of ecological and economical industrial machines and systems.

Maintenance work such as battery replacement is reduced because battery is not required anymore.

Reduce wasteful inventory management and replacement costs as battery is no required anymore. It contributes to the construction of ecological and economical industrial machines and systems.

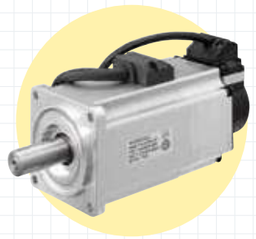

Battery-less absolute encoder motor list

	80 mm sq. or less Leadwire type						100 mm sq. or more Encoder connector (Small size JN2) type					
	50 W	100 W	200 W	400 W	750 W	1000 W	1.0 kW	1.5 kW	2.0 kW	3.0 kW	4.0 kW	5.0 kW
Low inertia **MSMF**	100 V 200 V	100 V 200 V	100 V 200 V	100 V 200 V	200 V	200 V	200 V	200 V	200 V	200 V	200 V	200 V
Middle inertia **MQMF**		100 V 200 V	100 V 200 V	100 V 200 V								
Middle inertia **MDMF**							200 V	200 V	200 V	200 V	200 V	200 V
Middle inertia **MGMF**							850 W 200 V	1.3 kW 200 V	1.8 kW 200 V	2.4 kW 200 V	2.9 kW 200 V	4.4 kW 200 V
High inertia **MHMF**	100 V 200 V	100 V 200 V	100 V 200 V	100 V 200 V	200 V	200 V	200 V	200 V	200 V	200 V	200 V	200 V

Table description
Voltage specifications — 100 V 200 V

* 400 V (Under development)

Compliance with MINAS A6 Family international standards

		Driver	Motor
EU/UK Standards	**EU EMC Directives/ UK EMC Regulation**	EN55011 EN61000-6-2 EN61000-6-4 EN61800-3	—
	EU Low Voltage Directives/ UK Low Voltage Regulation	EN61800-5-1	EN60034-1 EN60034-5
	Machinery (Functional safety *1)	ISO13849-1 EN61508 EN62061 EN61800-5-2	—
UL Standards		UL61800-5-1 (E164620)	UL1004-1, UL 1004-6 (E327868)
CSA Standards		C22.2 No.274	C22.2 No.100
Radio Waves Act (South Korea) (KC)*2		KN11 KN61000-4-2,3,4,5,6,8,11	—

IEC : International Electrotechnical Commission
UL : Underwriters Laboratories
EN : Europaischen Normen
CSA : Canadian Standards Association
EMC : Electromagnetic Compatibility

(A6SF series) (A6SE and A6SG series)

Safety parameter

	Diagnosis based on EDM	No diagnosis based on EDM
Safety Integrity Level	EN61508 (SIL3) EN62061 (SILCL3)	EN61508 (SIL2) EN62061 (SILCL2)
Performance level	ISO13849-1 PL e (Cat.3)	ISO13849-1 PL d (Cat.3)
Safety function	EN61800-5-2 (SIL 3, STO)	EN61800-5-2 (SIL 2, STO)
Hazardous failure probability per hour	<For size A,B,C,D,E,F> PFH = 1.34×10^{-8} (% SIL3 = 13.4 %) <For size G and H> PFH = 1.78×10^{-8} (% SIL3 = 17.8 %)	<For size A,B,C,D,E,F> PFH = 1.40×10^{-8} (% SIL2 = 1.40 %) <For size G and H> PFH = 1.85×10^{-8} (% SIL2 = 1.85 %)
Average time of hazardous failure	MTTFd : High (100 years)	MTTFd : High (100 years)
Average self-diagnosis rate	DC : Medium	DC : Low
Task time	15 years	15 years

- When export this product, follow statutory provisions of the destination country.

*1 A6SE, A6SG, A6NE and A6BE series doesn't correspond to the functional safety standard.

*2 Information related to the Korea Radio Law
This servo driver is a Class A commercial broadcasting radio wave generator not designed for home use.
The user and dealer should be aware of this fact.

A 급 기기 (업무용 방송통신기자재)
이 기기는 업무용(A 급) 전자파적합기기로서 판매자 또는 사용자는 이 점을 주의하시기 바라며, 가정외의 지역에서 사용하는 것을 목적으로 합니다.

(대상기종 : Servo Driver)

This products is not an object of china compulsory certification (CCC).

Low noise, compliant with EU EMC Directives/UK EMC Regulation

Radiated noise is minimized to meet EU EMC Directives/UK EMC Regulation and to support international standards.

Compliance with EU safety standards.

Features non-software-based independent redundant circuitry for motor power isolation. Independent redundant circuitry for motor power isolation. This obviates the need for magnetic contactors to isolate the required motor in order to accommodate EU Low Voltage Directives/UK Low Voltage Regulation machinery commands. (The final safety compliance must be applied as machine.)

SEMI-F47

Includes a function in compliance with the SEMI F47 standard for voltage sag immunity under no load or light load. Ideal for the semiconductor and LCD industries.
- Excluding the single-phase 100-V type.
- Please verify the actual compliance with your machine checking the F47 standard for voltage sag immunity.

Motor Line-up

Motor Line-up

For details on the battery-less absolute encoder type, refer to the "MINAS A6 Family Battery-less Absolute Encoder Models" catalog.

Motor			Rated output (kW)	Rated rotational speed (Max. speed) (r/min)	Rotary encoder 23-bit absolute	Enclosure (*1)	Motor lead-out configuration	Features	Applications
Low inertia	MSMF	 80 mm sq. or less	0.05 0.1 0.2 0.4 0.75 1.0	3000 (6000)	○	IP65	Leadwire	· Small capacity · Suitable for high speed application · Suitable for all applications	· Bonder · Semiconductor production equipment · Packing machines etc
		 80 mm sq. or less	0.05 0.1 0.2 0.4 0.75 1.0	3000 (6000)	○	IP67	Connector		
		 100 mm sq. or more	1.0 1.5 2.0 3.0	3000 (5000)	○	IP67	Connector	· Middle capacity · Suitable for the machines directly coupled with ball screw and high stiffness and high repetitive application	· SMT machines · Food machines · LCD production equipment etc
			4.0 5.0	3000 (4500)					
	MQMF (Flat type)	 80 mm sq. or less	0.1 0.2 0.4	3000 (6500)	○	IP65	Leadwire	· Small capacity · Flat type and suitable for low stiffness machines with belt driven · Motors with gear reducers are also available. (See. P.293)	· SMT machines · Inserter machines · Belt drive machines · unloading robot
		 80 mm sq. or less	0.1 0.2 0.4	3000 (6500)	○	IP67	Connector		
Middle inertia	MDMF	 130 mm sq. or more	1.0 1.5 2.0 3.0 4.0 5.0	2000 (3000)	○	IP67 (22.0 kW : IP44)	Connector (22.0 kW : Terminal)	· Middle capacity · Suitable for low stiffness machines with belt driven	· Conveyors · Robots · Machine tool etc
			7.5	1500 (3000)					
			11.0 15.0 22.0	1500 (2000)					
	MGMF (Low speed/ High torque type)	 130 mm sq. or more	0.85 1.3 1.8 2.4 2.9 4.4 5.5	1500 (3000)	○	IP67	Connector	· Middle capacity · Suitable for low speed and high torque application	· Conveyors · Robots · Textile machines etc
High inertia	MHMF	 80 mm sq. or less	0.05 0.1 0.2 0.4	3000 (6500)	○	IP65	Leadwire	· Small capacity · Suitable for low stiffness machines with belt driven · Motors with gear reducers are also available. (See. P.293)	· Conveyors · Robots etc
			0.75 1.0	3000 (6000)					
		 80 mm sq. or less	0.05 0.1 0.2 0.4	3000 (6500)	○	IP67	Connector		
			0.75 1.0	3000 (6000)					
		 130 mm sq. or more	1.0 1.5 2.0 3.0 4.0 5.0	2000 (3000)	○	IP67	Connector	· Middle capacity · Suitable for low stiffness machines with belt driven, and large load moment of inertia	· Conveyors · Robots · LCD manufacturing equipment etc
			7.5	1500 (3000)					

(*1) Please refer to P.303 for protection class conditions.

*** For possible combinations of motors and drivers, see P.29 to P.42.**

- When using a rotary encoder as an absolute system (using multi-turn data), connect a battery to the absolute encoder.
- When using a rotary encoder as an incremental system (not using multi-turn data), do not connect a battery for absolute encoder.

Model Designation

Refer to P.29 to P.42 for motor and driver combinations. * For combination of elements of model number, refer to Index P.448.

Servo Motor "Oil seal with protective lip" option is not available for motors above 7.5 kW.

M	S	M	F	5	A	Z	L	1	A	1	*
①			②	③		④	⑤	⑥	⑦		Special specifications

① Type

Symbol	Type
MSM	Low inertia (50 W to 5.0 kW)
MQM	Middle inertia (100 W to 400 W)
MDM	Middle inertia (1.0 kW to 22.0 kW)
MGM	Middle inertia (0.85 kW to 5.5 kW)
MHM	High inertia (50 W to 7.5 kW)

② Series

Symbol	Series name
F	A6 Family

③ Motor rated output

Symbol	Rated output
5A	50 W
01	100 W
02	200 W
04	400 W
08	750 W
09	0.85 kW, 1000 W (130 mm sq.) (80 mm sq.)
10	1.0 kW

Symbol	Rated output
13	1.3 kW
15	1.5 kW
18	1.8 kW
20	2.0 kW
24	2.4 kW
29	2.9 kW
30	3.0 kW
40	4.0 kW

Symbol	Rated output
44	4.4 kW
50	5.0 kW
55	5.5 kW
75	7.5 kW
C1	11.0 kW
C5	15.0 kW
D2	22.0 kW

④ Voltage specifications

Symbol	Specifications
1	100 V
2	200 V
Z	100 V/ 200 V common (50 W only)

⑥ Design order

Symbol	Specifications
1	Standard

<Note>
When using a rotary encoder as an incremental system (not using multi-turn data), do not connect a battery for absolute encoder.

⑤ Rotary encoder specifications

Symbol	Format	Pulse counts	Resolution	Wires
L	Absolute	23-bit	8388608	5

⑦ Motor specifications: IP67 *2 100 mm sq. to 220 mm sq. MSMF, MHMF, MDMF, MGMF

Symbol		Shaft		Holding brake		Oil seal		Encoder terminal	
		Round	Key-way	without	with	with	With protective lip	Connector JN2 (Small size)	Connector JL10 (Large size) *3
C	5	●		●		●		●	
C	6	●		●		●			●
C	7	●		●			●	●	
C	8	●		●			●		●
D	5	●			●	●		●	
D	6	●			●	●			●
D	7	●			●		●	●	
D	8	●			●		●		●
G	5		●	●		●		●	
G	6		●	●		●			●
G	7		●	●			●	●	
G	8		●	●			●		●
H	5		●		●	●		●	
H	6		●		●	●			●
H	7		●		●		●	●	
H	8		●		●		●		●

⑦ Motor specifications: 80 mm sq. or less MSMF 50 W to 1000 W

Symbol		Shaft		Holding brake		Oil seal		Motor encoder terminal *1	
		Round	Key-way, center tap	without	with	without	with	Connector JN	Lead wire
A	1	●		●		●		●	
A	2	●		●		●			●
B	1	●			●	●		●	
B	2	●			●	●			●
C	1	●		●			●	●	
C	2	●		●			●		●
D	1	●			●		●	●	
D	2	●			●		●		●
S	1		●	●		●		●	
S	2		●	●		●			●
T	1		●		●	●		●	
T	2		●		●	●			●
U	1		●	●			●	●	
U	2		●	●			●		●
V	1		●		●		●	●	
V	2		●		●		●		●

⑦ Motor specifications: 80 mm sq. or less MHMF 50 W to 1000 W MQMF 100 W to 400 W

Symbol		Shaft		Holding brake		Oil seal			Motor encoder terminal *1	
		Round	Key-way, center tap	without	with	without	with	With protective lip	Connector JN	Lead wire
A	1	●		●		●			●	
A	2	●		●		●				●
B	1	●			●	●			●	
B	2	●			●	●				●
C	1	●		●			●		●	
C	2	●		●			●			●
C	3	●		●				●	●	
C	4	●		●				●		●
D	1	●			●		●		●	
D	2	●			●		●			●
D	3	●			●			●	●	
D	4	●			●			●		●
S	1		●	●		●			●	
S	2		●	●		●				●
T	1		●		●	●			●	
T	2		●		●	●				●
U	1		●	●			●		●	
U	2		●	●			●			●
U	3		●	●				●	●	
U	4		●	●				●		●
V	1		●		●		●		●	
V	2		●		●		●			●
V	3		●		●			●	●	
V	4		●		●			●		●

*1 Connector type: IP67, Lead wire type: IP65 *2 22.0 kW: IP44
*3 Connector on the motor side encoder. (Also applicable to screwed type.)

Servo Driver "Basic" and "RS485 communication" types are not available for G-Frame and H-Frame drivers.

M	A	D	L	N	1	5	S	E	*	*	*
①			②	③	④	⑤	⑥	⑦			Special specifications

① Frame symbol

Symbol	Frame	Symbol	Frame
MAD	A-Frame	MED	E-Frame
MBD	B-Frame	MFD	F-Frame
MCD	C-Frame	MGD	G-Frame
MDD	D-Frame	MHD	H-Frame

② Series

Symbol	Series name
L	A6 Family

③ Safety Function *4

Symbol	Specifications
N	without the safety function
T	with the safety function

④ Max. current rating

Symbol	Current rating
0	6 A
1	8 A
2	12 A
3	22 A
4	24 A
5	40 A
8	60 A

Symbol	Current rating
9	80 A
A	100 A
B	120 A
C	160 A
E	240 A
F	360 A

⑤ Supply voltage specifications

Symbol	Specifications
1	Single phase 100 V
3	3-phase 200 V
5	Single/3-phase 200 V

⑥ I/f specifications

Symbol (specification)
S (Analog/Pulse)

⑦ Classification of type *4

Symbol	Specification
E	Basic type (Pulse train only)
F	Multi fanction type (Pulse, analog, full-closed)
G	RS485 communication type (Pulse train only)

*4 Position control type "E" and general communication type "G" do not have a safety function.

<A6SF Series (Driver: A-frame Motor: 200 W)>

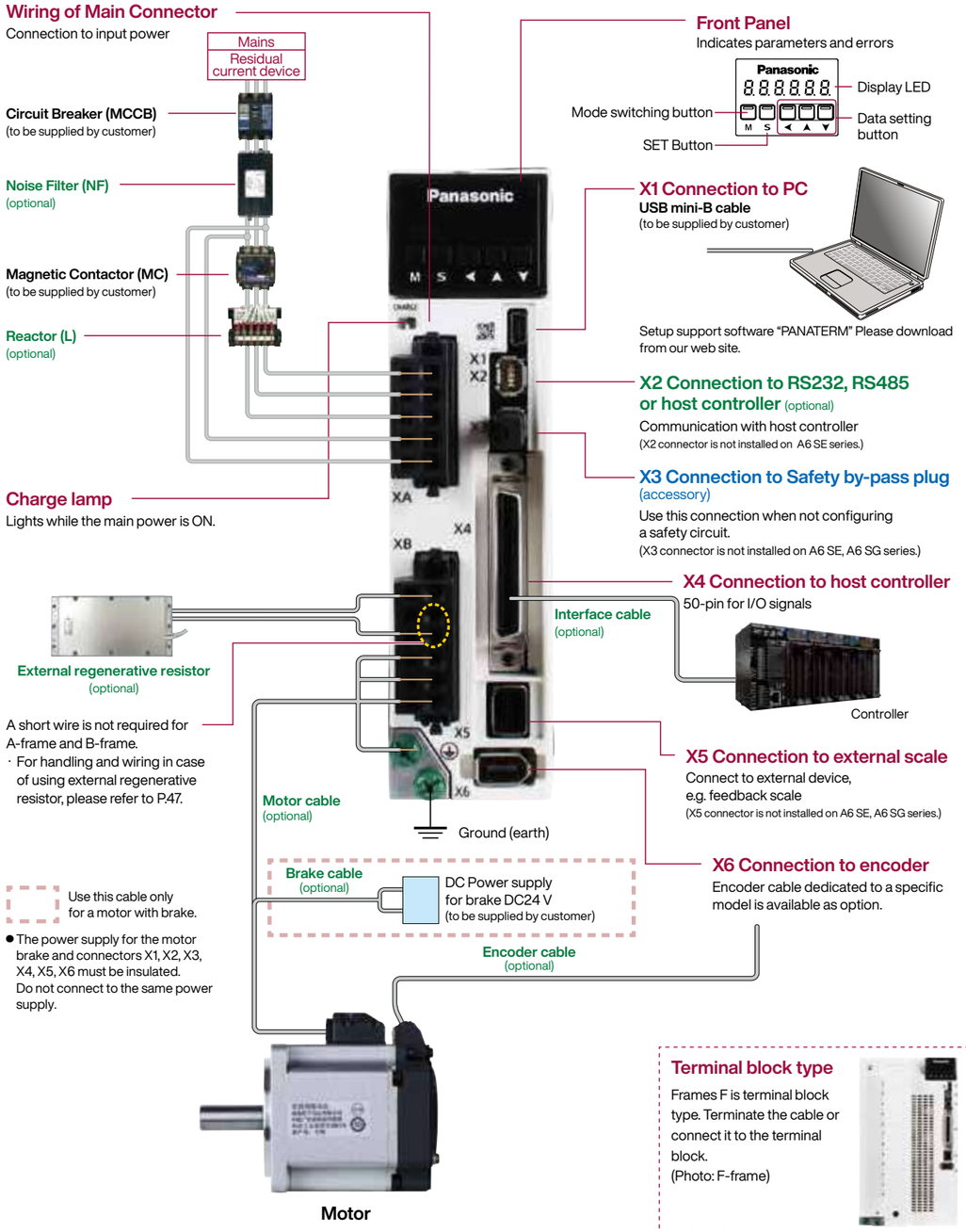

<A6SG Series/ A6SE Series (Driver: D-frame Motor: 1.0 kW)>

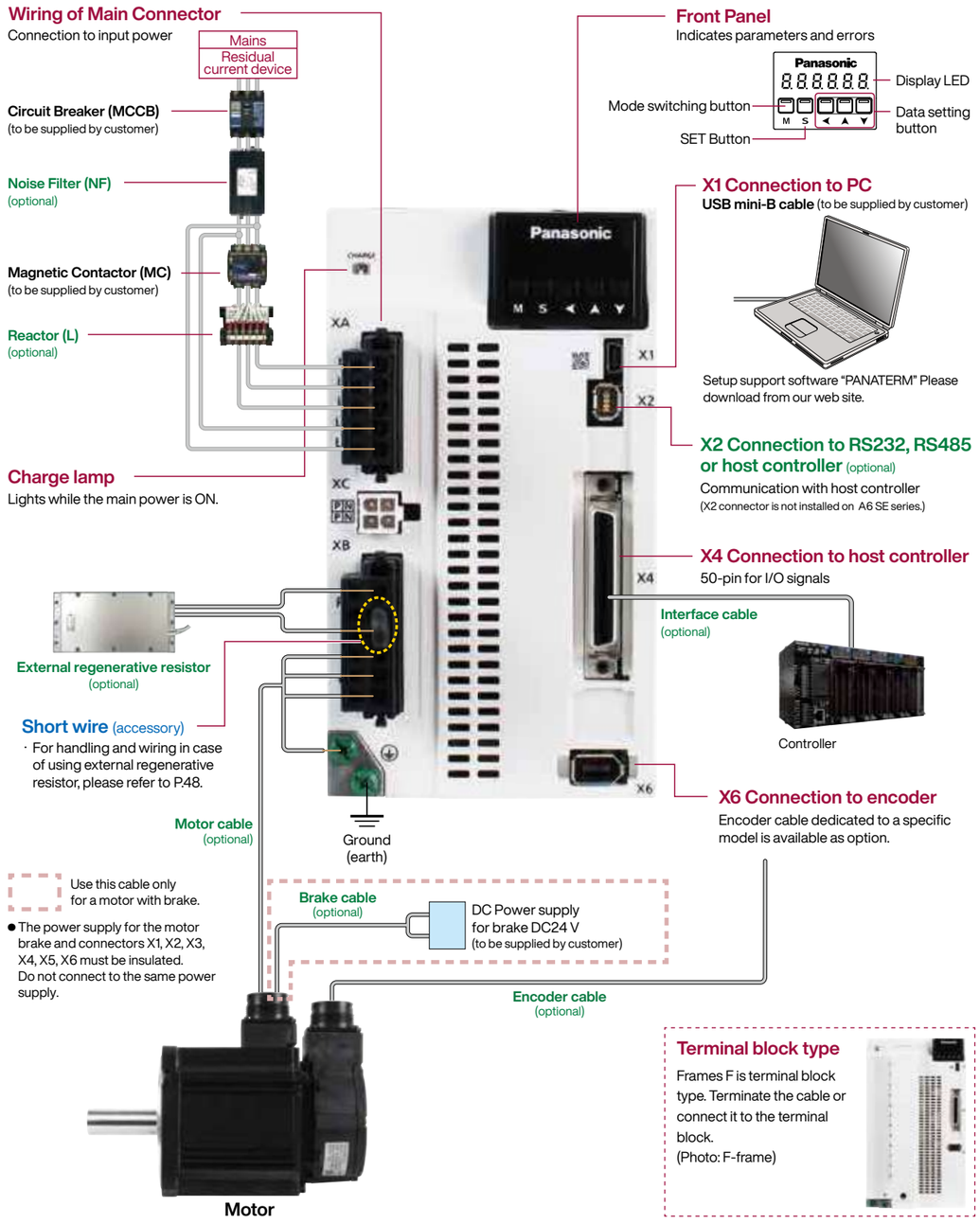

<Caution>
Apply adequate tightening torque to the product mounting screw by taking into consideration strength of the screw and the characteristics of material to which the product is installed. Overtightening can damage the screw and/or material; undertightening can result in loosening.

<Note>
Initial setup of rotational direction:
positive = CCW and negative = CW.
Pay an extra attention.

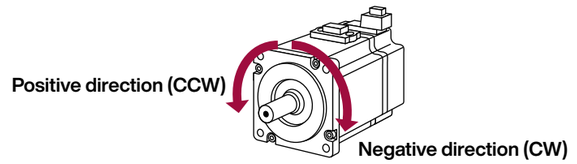

Overall Wiring

<A6SF Series (Driver: G-frame Motor: 7.5 kW)>

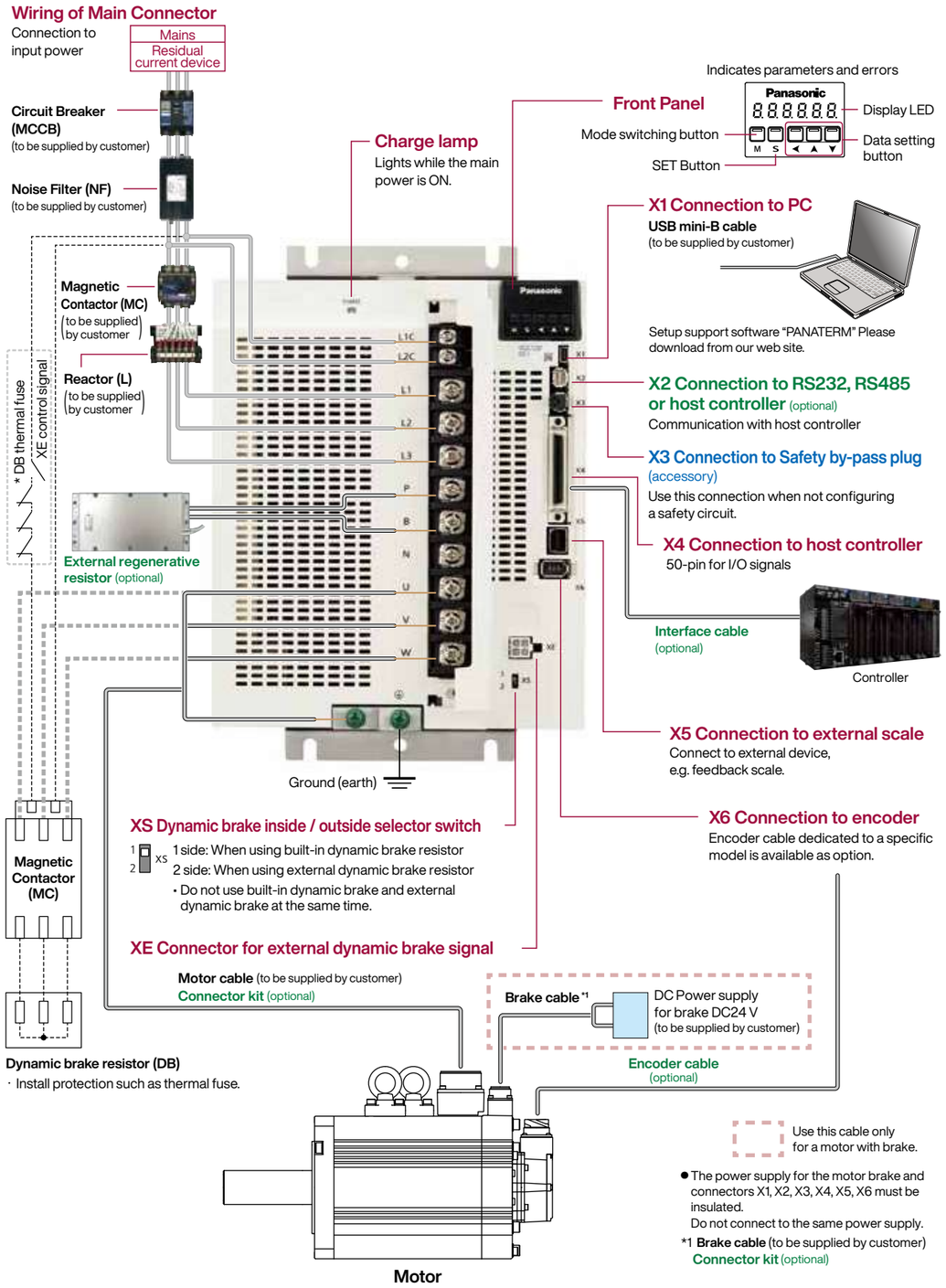

<A6SF Series (Driver: H-frame Motor: 22.0 kW)>

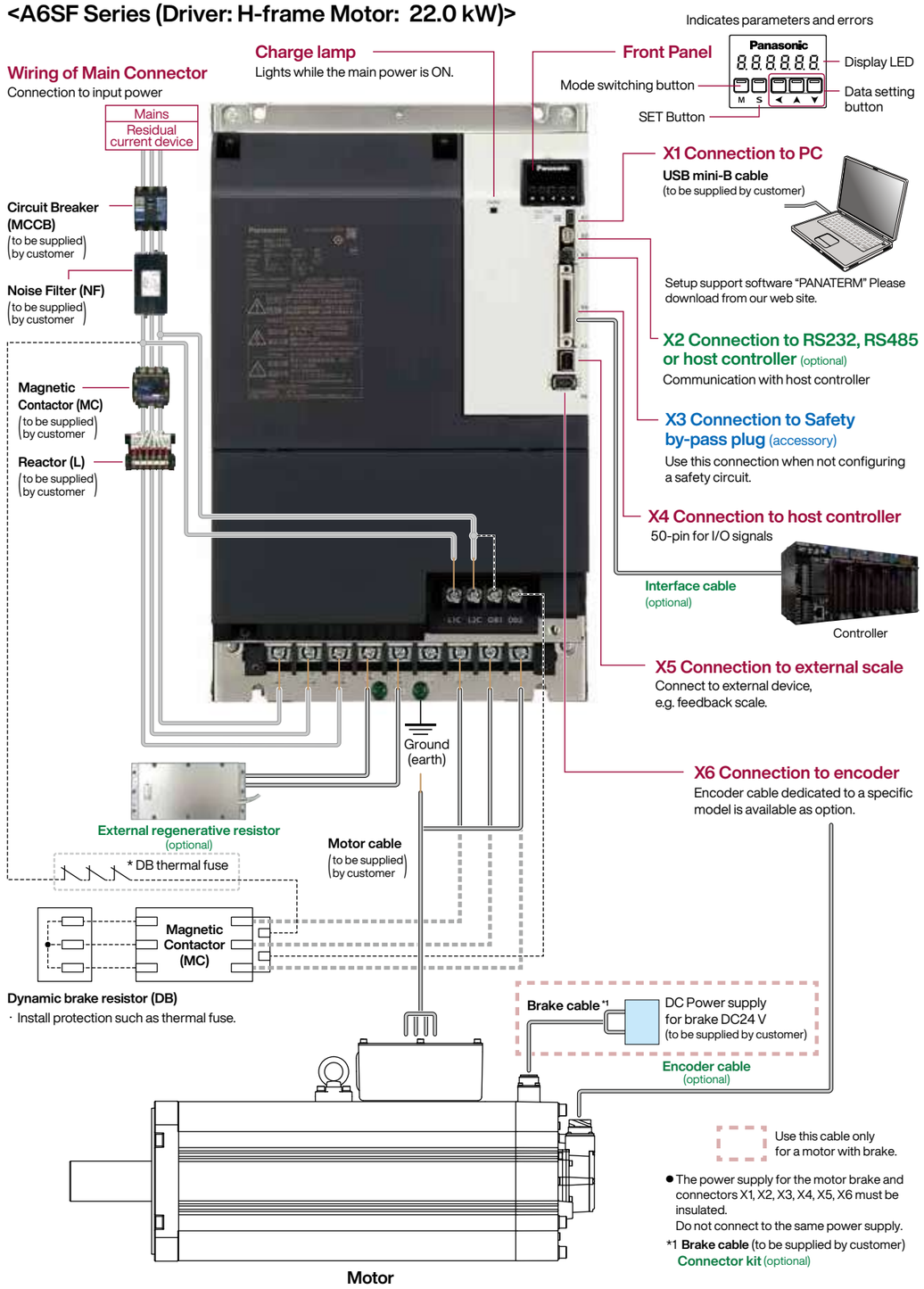

<Caution> Apply adequate tightening torque to the product mounting screw by taking into consideration strength of the screw and the characteristics of material to which the product is installed. Overtightening can damage the screw and/or material; undertightening can result in loosening.

<Note> Initial setup of rotational direction: positive = CCW and negative = CW. Pay an extra attention.

Driver and List of Applicable Peripheral Devices

Driver	Applicable motor	Voltage (V) *1	Rated output (kW)	Required Power (at the rated load) (kVA)	Circuit breaker (rated current) (A)	Noise filter (Single phase / 3-phase)	Surge absorber (Single phase / 3-phase)	Ferrite core	Rated operating current of magnetic (contactor contact configuration) *2	Diameter and withstand voltage of main circuit cable	Crimp terminal for main circuit terminal block *3	Diameter and withstand voltage of control power supply cable	Crimp terminal for control power supply terminal block	Diameter and withstand voltage of motor cable *4	Diameter and withstand voltage of brake cable
MADL	MSMF MHMF	Single phase, 100	0.05	approx. 0.4	10	DV0P4170	DV0P4190	DV0P1460	20 A (3P+1a)	0.75 mm²/ AWG18 600 VAC or more to 2.0 mm²/ AWG14 600 VAC or more	Connection to exclusive connector	0.75 mm²/ AWG18 600 VAC or more	Connection to exclusive connector	0.75 mm²/ AWG18 600 VAC or more to 2.0 mm²/ AWG14 600 VAC or more	0.28 mm² to 0.75 mm²/ AWG22 to AWG18 100 VAC or more
	MSMF MQMF MHMF		0.1												
	MSMF MHMF	Single/ 3-phase 200	0.05	approx. 0.5		DV0P4170 / DV0PM20042	DV0P4190 / DV0P1450								
	MSMF MQMF MHMF		0.1, 0.2												
MBDL	MSMF MQMF MHMF	Single phase, 100	0.2	approx. 0.5		DV0P4170	DV0P4190								
		Single/ 3-phase 200	0.4	approx. 0.9		DV0P4170 / DV0PM20042	DV0P4190 / DV0P1450								
MCDL	MSMF MQMF MHMF	Single phase, 100	0.4	approx. 0.9	15	DV0PM20042	DV0P4190								
	MSMF MHMF	Single/ 3-phase 200	0.75	approx. 1.8			DV0P4190 / DV0P1450								
MDDL	MGMF	Single/ 3-phase 200	0.85	approx. 2.0	20	DV0P4220	DV0P4190 / DV0P1450		30 A (3P+1a)						
	MSMF		1.0 (80 mm sq.)	approx. 2.4											
	MDMF MHMF		1.0												
	MHMF		1.0 (80 mm sq.)												
	MSMF		1.0												
	MGMF		1.3	approx. 2.6											
	MSMF MDMF MHMF		1.5	approx. 2.9											
MEDL	MGMF	3-phase 200	1.8	approx. 3.4	30	DV0PM20043	DV0P1450		60 A (3P+1a)	2.0 mm²/ AWG14 600 VAC or more to 3.5 mm²/ AWG12 600 VAC or more		0.75 mm²/ AWG18 600 VAC or more		2.0 mm²/ AWG14 600 VAC or more to 3.5 mm²/ AWG12 600 VAC or more	0.75 mm²/ AWG18 100 VAC or more
	MSMF MDMF MHMF		2.0	approx. 3.8											
	MGMF		2.4	approx. 4.5										3.5 mm²/ AWG12 600 VAC or more	
MFDL	MGMF	3-phase 200	2.9	approx. 5.0	50	DV0P3410	DV0P1450		100 A (3P+1a)	3.5 mm²/ AWG12 600 VAC or more	11 mm or smaller φ5.3 Terminal block M5		11 mm or smaller φ5.3 Terminal block M5		
	MSMF MDMF MHMF		3.0	approx. 5.2											
	MSMF MDMF MHMF		4.0	approx. 6.5											
	MGMF		4.4	approx. 7.0											
	MSMF MDMF MHMF		5.0	approx. 7.8											
MGDL	MGMF	3-phase 200	5.5	approx. 8.5	60	HF3080C-SZA (Recommended components)	DV0P1450	DV0P1460 RJ8095 (Recommended components) T400-61D *5	100 A (3P+1a)	8.0 mm²/ AWG8 600 VAC or more			7 mm or smaller φ3.2 Terminal block M3	14 mm²/ AWG6 600 VAC or more	0.75 mm²/ AWG18 100 VAC or more
	MDMF		7.5	approx. 11											
	MHMF														
MHDL	MDMF	3-phase 200	11.0	approx. 15	125	HF3100C-SZA (Recommended components)	DV0P1450		150 A (3P+1a)	22 mm²/ AWG4 600 VAC or more	16 mm or smaller φ6.4 Terminal block M6		10 mm or smaller φ4.3 Terminal block M4	22 mm²/ AWG4 600 VAC or more *6	0.75 mm²/ AWG18 100 VAC or more
			15.0	approx. 20										22.8 mm or smaller φ8.5 Terminal block M8	
			22.0	approx. 28	175					38 mm²/ AWG2 600 VAC or more					

*1 Select peripheral devices for single/3phase common specification according to the power source.
*2 The magnetic contactor used for the external dynamic brake resistor should have the same rating as the magnetic contactor used for the main circuit.
*3 For the ground screw, use the same crimp terminal as that for the main circuit terminal block.
*4 The thickness of the grounding wire and the thickness of the external dynamic brake resistor should be the same as or larger than the thickness of the motor wire.
*5 Please use all to comply with international standards.
*6 22.0 kW The connection of the motor power line is a terminal block. In order to comply with the CSA standard, it is necessary to use a CSA standard-certified power wire round terminal.

Related page

Noise filter.....P.412 “Composition of Peripheral Devices”
Surge absorber .....P.413 “Composition of Peripheral Devices”
Ferrite core.....P.414 “Composition of Peripheral Devices”
Motor/brake connector.....P.307 “Specifications of Motor connector”

About circuit breaker and magnetic contactor

To comply to EU Directives/UK Regulation, install a circuit breaker between the power and the noise filter without fail, and the circuit breaker should conform to IEC Standards and UL recognized (Listed and (UL) marked).

Suitable for use on a circuit capable of delivering not more than 5000 Arms symmetrical amperes, below the maximum input voltage of the product.

If the short-circuit current of the power supply exceeds this value, install a current limit device (current limiting fuse, current limiting circuit breaker, transformer, etc.) to limit the short-circuit current.

<Caution>

· Select a circuit breaker and noise filter which match to the capacity of power supply (including a load condition).

Terminal block and protective earth terminals

· Use a copper conductor cables with temperature rating of 75 or higher.
· Use the attached exclusive connector for A-frame to E-frame, and maintain the peeled off length of 8 mm to 9 mm.

■ Fastening torque list (Terminal block screw/Terminal cover fastening screw)

Driver		Terminal block screw		Terminal cover fastening screw	
Frame	Terminal name	Nominal size	Fastening torque (N·m) Note)1	Nominal size	Fastening torque (N·m) Note)1
MFDL	L1, L2, L3, L1C, L2C, P, RB, B, N, U, V, W	M5	1.8 to 2.0	M3	0.19 to 0.21
MGDL	L1C, L2C	M3	0.4 to 0.6	M3	0.19 to 0.21
	L1, L2, L3, P, B, N, U, V, W	M5	2.0 to 2.4		
MHDL	L1C, L2C, DB1, DB2	M4	0.7 to 1.0	M5	2.0 to 2.5
	L1, L2, L3, P, B, N, U, V, W	M6	2.2 to 2.5	M3	0.19 to 0.21

■ Fastening torque list (Ground terminal screw/Connector to host controller [X4])

Driver frame	Ground screw		Connector to host controller (X4)	
	Nominal size	Fastening torque (N·m) Note)1	Nominal size	Fastening torque (N·m) Note)1
MADL, MBDL, MCDL, MDDL, MEDL	M4	1.0 to 1.2	M2.6	0.2±0.05
MFDL, MGDL	M5	1.8 to 2.0		
MHDL	M6	2.4 to 2.6		

■ Motor: Fastening torque

Motor	U, V, W terminal Ground terminal screw		Terminal box cover fastening screw	
	Nominal size	Fastening torque (N·m) Note)1	Nominal size	Fastening torque (N·m) Note)1
MDMF 22.0 kW	M8	12.0	M5	4.4

Note)1 **<Caution>**

· Applying fastening torque larger than the maximum value may result in damage to the product.
· Do not turn on power without tightening all terminal block screws properly, otherwise, loose contacts may generate heat (smoking, firing).

<Remarks>

· To check for looseness, conduct periodic inspection of fastening torque once a year.

Motor						Driver			Power capacity (at rated load) (kVA)		Optional parts ▶ refer to P.306						
Motor series		Power supply	Output (W)	Part No. Note)1	Rating/ Spec. Dimensions (page)	A6SF series Multi function type (Pulse, analog, full-closed)	A6SG series RS485 communication / A6SE series Basic (Pulse signal input) Note)2, Note)4	Frame			Encoder Cable Note)3 23-bit Absolute: Use in the absolute system (with battery box) Note)5	Encoder Cable Note)3 23-bit Absolute: Use in the Incremental system (without battery box)	Motor Cable Note)3: without Brake	Motor Cable Note)3: with Brake	Brake Cable Note)3	External Regenerative Resistor	Reactor (Single phase / 3-phase)	Noise Filter (Single phase / 3-phase)
											Fixed cable		Movable cable		Movable cable			
Low inertia	MSMF (Leadwire type) 3000 r/min IP65	Single phase 100 V	50	MSMF5AZL1 ☐ 2	63, 119	MADLT01SF	MADLN01S◇	A-frame ★	Approx.	0.4	MFECA 0＊＊0EAE (For fixed)	MFECA 0＊＊0EAD (For fixed)	MFMCA 0＊＊0EED	MFMCB 0＊＊0GET Note)6		DV0P4280	DV0P227	DV0P4170
			100	MSMF011L1 ☐ 2	65, 120	MADLT11SF	MADLN11S◇											
			200	MSMF021L1 ☐ 2	67, 121	MBDLT21SF	MBDLN21S◇	B-frame ★	Approx.	0.5						DV0P4283	DV0P228	
			400	MSMF041L1 ☐ 2	69, 123	MCDLT31SF	MCDLN31S◇	C-frame	Approx.	0.9						DV0P4282		DV0PM20042
		Single phase/ 3-phase 200 V	50	MSMF5AZL1 ☐ 2	64, 119	MADLT05SF	MADLN05S◇	A-frame ★	Approx.	0.5						DV0P4281	DV0P227 / DV0P220	DV0P4170 / DV0PM20042
			100	MSMF012L1 ☐ 2	66, 120	MADLT05SF	MADLN05S◇											
			200	MSMF022L1 ☐ 2	68, 121	MADLT15SF	MADLN15S◇									DV0P4283		
			400	MSMF042L1 ☐ 2	70, 123	MBDLT25SF	MBDLN25S◇	B-frame ★	Approx.	0.9							DV0P228 / DV0P220	
			750	MSMF082L1 ☐ 2	71, 124	MCDLT35SF	MCDLN35S◇	C-frame	Approx.	1.8								DV0PM20042
			1000	MSMF092L1 ☐ 2	72, 125	MDDLT45SF	MDDLN45S◇	D-frame	Approx.	2.4						DV0P4284	DV0P228 / DV0P222	DV0P4220
Middle inertia Flat type	MQMF (Leadwire type) 3000 r/min IP65	Single phase 100 V	100	MQMF011L1 ☐ 2 MQMF011L1 ☐ 4	79, 135	MADLT11SF	MADLN11S◇	A-frame ★	Approx.	0.4	MFECA 0＊＊0EAE (For fixed)	MFECA 0＊＊0EAD (For fixed)	MFMCA 0＊＊0EED	MFMCB 0＊＊0GET Note)6		DV0P4280	DV0P227	DV0P4170
			200	MQMF021L1 ☐ 2 MQMF021L1 ☐ 4	81, 139	MBDLT21SF	MBDLN21S◇	B-frame ★	Approx.	0.5						DV0P4283	DV0P228	
			400	MQMF041L1 ☐ 2 MQMF041L1 ☐ 4	83, 143	MCDLT31SF	MCDLN31S◇	C-frame	Approx.	0.9						DV0P4282		DV0PM20042
		Single phase/ 3-phase 200 V	100	MQMF012L1 ☐ 2 MQMF012L1 ☐ 4	80, 135	MADLT05SF	MADLN05S◇	A-frame ★	Approx.	0.5						DV0P4281	DV0P227 / DV0P220	DV0P4170 / DV0PM20042
			200	MQMF022L1 ☐ 2 MQMF022L1 ☐ 4	82, 139	MADLT15SF	MADLN15S◇									DV0P4283		
			400	MQMF042L1 ☐ 2 MQMF042L1 ☐ 4	84, 143	MBDLT25SF	MBDLN25S◇	B-frame ★	Approx.	0.9							DV0P228 / DV0P220	
High inertia	MHMF (Leadwire type) 3000 r/min IP65	Single phase 100 V	50	MHMF5AZL1 ☐ 2 MHMF5AZL1 ☐ 4	85, 147	MADLT01SF	MADLN01S◇	A-frame ★	Approx.	0.4	MFECA 0＊＊0EAE (For fixed)	MFECA 0＊＊0EAD (For fixed)	MFMCA 0＊＊0EED	MFMCB 0＊＊0GET Note)6		DV0P4280	DV0P227	DV0P4170
			100	MHMF011L1 ☐ 2 MHMF011L1 ☐ 4	87, 151	MADLT11SF	MADLN11S◇											
			200	MHMF021L1 ☐ 2 MHMF021L1 ☐ 4	89, 155	MBDLT21SF	MBDLN21S◇	B-frame ★	Approx.	0.5						DV0P4283	DV0P228	
			400	MHMF041L1 ☐ 2 MHMF041L1 ☐ 4	91, 159	MCDLT31SF	MCDLN31S◇	C-frame	Approx.	0.9						DV0P4282		DV0PM20042
		Single phase/ 3-phase 200 V	50	MHMF5AZL1 ☐ 2 MHMF5AZL1 ☐ 4	86, 147	MADLT05SF	MADLN05S◇	A-frame ★	Approx.	0.5						DV0P4281	DV0P227 / DV0P220	DV0P4170 / DV0PM20042
			100	MHMF012L1 ☐ 2 MHMF012L1 ☐ 4	88, 151	MADLT05SF	MADLN05S◇											
			200	MHMF022L1 ☐ 2 MHMF022L1 ☐ 4	90, 155	MADLT15SF	MADLN15S◇									DV0P4283		
			400	MHMF042L1 ☐ 2 MHMF042L1 ☐ 4	92, 159	MBDLT25SF	MBDLN25S◇	B-frame ★	Approx.	0.9							DV0P228 / DV0P220	
			750	MHMF082L1 ☐ 2 MHMF082L1 ☐ 4	93, 163	MCDLT35SF	MCDLN35S◇	C-frame	Approx.	1.8								DV0PM20042
			1000	MHMF092L1 ☐ 2 MHMF092L1 ☐ 4	94, 167	MDDLT55SF	MDDLN55S◇	D-frame	Approx.	2.4						DV0P4284	DV0P228 / DV0P222	DV0P4220

★: Frame-A and B drivers are not equipped with regenerative resistors.When regeneration occurs, please prepare an optional external regenerative resistor.

Note)1 ☐ : Represents the motor specifications. (refer to “Model designation” P.22.)

Note)2 ◇ : Represents the driver specifications. (refer to “Model designation” P.22.)

Note)3 ＊＊ : Represents the cable length (03/3 m, 05/5 m, 10/10 m, 20/20 m). Example. 3 m/MFECA0030EAE

Note)4 Because A6SE series driver (dedicated for position control) does not support the absolute system specification, only incremental system can be used in combination.

Note)5 Please note that a battery is not supplied together with 23-bit absolute encoder cable (with battery box). Please buy the battery part number “DV0P2990” separately.

Note)6 Brake cable and motor cables are required for the motors with brake.

Motor						Driver			Power capacity (at rated load) (kVA)		Optional parts ▶ refer to P.306							
Motor series		Power supply	Output (W)	Part No. Note)1	Rating/ Spec. Dimensions (page)	A6SF series Multi function type (Pulse, analog, full-closed)	A6SG series RS485 communication / A6SE series Basic (Pulse signal input) Note)2, Note)5	Frame			Encoder Cable Note)3		Motor Cable Note)3		Brake Cable Note)3	External Regenerative Resistor	Reactor (Single phase / 3-phase)	Noise Filter (Single phase / 3-phase)
											23-bit Absolute							
											Use in the absolute system (with battery box) Note)6	Use in the Incremental system (without battery box)	without Brake	with Brake				
Low inertia	MSMF (Connector type) 3000 r/min IP67	Single phase 100 V	50	MSMF5AZL1 □ 1	63, 119	MADLT01SF	MADLN01S◇	A-frame ★	Approx.	0.4	MFECA 0＊＊0MJE (For movable, direction of motor shaft) / MFECA 0＊＊0MKE (For movable, opposite direction of motor shaft) / MFECA 0＊＊0TJE (For fixed, direction of motor shaft) / MFECA 0＊＊0TKE (For fixed, opposite direction of motor shaft)	MFECA 0＊＊0MJD (For movable, direction of motor shaft) / MFECA 0＊＊0MKD (For movable, opposite direction of motor shaft) / MFECA 0＊＊0TJD (For fixed, direction of motor shaft) / MFECA 0＊＊0TKD (For fixed, opposite direction of motor shaft)	MFMCA 0＊＊0NJD (For movable, direction of motor shaft) / MFMCA 0＊＊0NKD (For movable, opposite direction of motor shaft) / MFMCA 0＊＊0RJD (For fixed, direction of motor shaft) / MFMCA 0＊＊0RKD (For fixed, opposite direction of motor shaft) Note)4		MFMCB 0＊＊0PJT (For movable, direction of motor shaft) / MFMCB 0＊＊0PKT (For movable, opposite direction of motor shaft) / MFMCB 0＊＊0SJT (For fixed, direction of motor shaft) / MFMCB 0＊＊0SKT (For fixed, opposite direction of motor shaft) Note)7	DV0P4280	DV0P227	DV0P4170
			100	MSMF011L1 □ 1	65, 121	MADLT11SF	MADLN11S◇											
			200	MSMF021L1 □ 1	67, 122	MBDLT21SF	MBDLN21S◇	B-frame ★	Approx.	0.5						DV0P4283	DV0P228	
			400	MSMF041L1 □ 1	69, 123	MCDLT31SF	MCDLN31S◇	C-frame	Approx.	0.9						DV0P4282		DV0PM20042
		Single phase/ 3-phase 200 V	50	MSMF5AZL1 □ 1	64, 119	MADLT05SF	MADLN05S◇	A-frame ★	Approx.	0.5						DV0P4281	DV0P227 / DV0P220	DV0P4170 / DV0PM20042
			100	MSMF012L1 □ 1	66, 121	MADLT05SF	MADLN05S◇											
			200	MSMF022L1 □ 1	68, 122	MADLT15SF	MADLN15S◇									DV0P4283		
			400	MSMF042L1 □ 1	70, 123	MBDLT25SF	MBDLN25S◇	B-frame ★	Approx.	0.9							DV0P228 / DV0P220	DV0PM20042
			750	MSMF082L1 □ 1	71, 125	MCDLT35SF	MCDLN35S◇	C-frame	Approx.	1.8								
			1000	MSMF092L1 □ 1	72, 126	MDDLT45SF	MDDLN45S◇	D-frame	Approx.	2.4						DV0P4284	DV0P228 / DV0P222	DV0P4220
Middle inertia Flat type	MQMF (Connector type) 3000 r/min IP67	Single phase 100 V	100	MQMF011L1 □ 1 / MQMF011L1 □ 3	79, 137	MADLT11SF	MADLN11S◇	A-frame ★	Approx.	0.4	MFECA 0＊＊0MJE (For movable, direction of motor shaft) / MFECA 0＊＊0MKE (For movable, opposite direction of motor shaft) / MFECA 0＊＊0TJE (For fixed, direction of motor shaft) / MFECA 0＊＊0TKE (For fixed, opposite direction of motor shaft)	MFECA 0＊＊0MJD (For movable, direction of motor shaft) / MFECA 0＊＊0MKD (For movable, opposite direction of motor shaft) / MFECA 0＊＊0TJD (For fixed, direction of motor shaft) / MFECA 0＊＊0TKD (For fixed, opposite direction of motor shaft)	MFMCA 0＊＊0UFD (For movable, direction of motor shaft) / MFMCA 0＊＊0UGD (For movable, opposite direction of motor shaft) / MFMCA 0＊＊0WFD (For fixed, direction of motor shaft) / MFMCA 0＊＊0WGD (For fixed, opposite direction of motor shaft)	MFMCA 0＊＊0VFD (For movable, direction of motor shaft) / MFMCA 0＊＊0VGD (For movable, opposite direction of motor shaft) / MFMCA 0＊＊0XFD (For fixed, direction of motor shaft) / MFMCA 0＊＊0XGD (For fixed, opposite direction of motor shaft)	–	DV0P4280	DV0P227	DV0P4170
			200	MQMF021L1 □ 1 / MQMF021L1 □ 3	81, 141	MBDLT21SF	MBDLN21S◇	B-frame ★	Approx.	0.5						DV0P4283	DV0P228	
			400	MQMF041L1 □ 1 / MQMF041L1 □ 3	83, 145	MCDLT31SF	MCDLN31S◇	C-frame	Approx.	0.9						DV0P4282		DV0PM20042
		Single phase/ 3-phase 200 V	100	MQMF012L1 □ 1 / MQMF012L1 □ 3	80, 137	MADLT05SF	MADLN05S◇	A-frame ★	Approx.	0.5						DV0P4281	DV0P227 / DV0P220	DV0P4170 / DV0PM20042
			200	MQMF022L1 □ 1 / MQMF022L1 □ 3	82, 141	MADLT15SF	MADLN15S◇									DV0P4283		
			400	MQMF042L1 □ 1 / MQMF042L1 □ 3	84, 145	MBDLT25SF	MBDLN25S◇	B-frame ★	Approx.	0.9							DV0P228 / DV0P220	

★ : Frame-A and B drivers are not equipped with regenerative resistors.When regeneration occurs, please prepare an optional external regenerative resistor.

Note)1 □ : Represents the motor specifications. (refer to “Model designation” P.22.)

Note)2 ◇ : Represents the driver specifications. (refer to “Model designation” P.22.)

Note)3 ＊＊ : Represents the cable length (03/3 m, 05/5 m, 10/10 m, 20/20 m). Example. 3 m/MFECA0030MJE

Note)4 Cables for opposite to output shaft cannot be used with 50 W or 100 W motor. (MSMF connector type only.)

Note)5 Because A6SE series driver (dedicated for position control) does not support the absolute system specification, only incremental system can be used in combination.

Note)6 Please note that a battery is not supplied together with 23-bit absolute encoder cable (with battery box). Please buy the battery part number “DV0P2990” separately.

Note)7 Brake cable and motor cables are required for the motors with brake.

[Movable : For application where the cable is movable.
Fixed : For application where the cable is fixed.
Direction of motor shaft/Opposite direction of motor shaft : Cable direction]

Motor					Driver			Power capacity (at rated load) (kVA)		Optional parts ▶ refer to P.306							
Motor series		Power supply	Output (W)	Part No. Note)1	Rating/ Spec. Dimensions (page)	A6SF series Multi function type (Pulse, analog, full-closed)	A6SG series RS485 communication / A6SE series Basic (Pulse signal input) Note)2, Note)4	Frame			Encoder Cable Note)3		Motor Cable Note)3		Brake Cable Note)3	External Regenerative Resistor	Reactor (Single phase / 3-phase)	Noise Filter (Single phase / 3-phase)
											23-bit Absolute							
											Use in the absolute system (with battery box) Note)5	Use in the Incremental system (without battery box)	without Brake	with Brake				
High inertia	MHMF (Connector type) 3000 r/min IP67	Single phase 100 V	50	MHMF5AZL1 □ 1 MHMF5AZL1 □ 3	85, 149	MADLT01SF	MADLN01S◇	A-frame ★	Approx. 0.4	MFECA 0 ∗ ∗ 0MJE (For movable, direction of motor shaft) MFECA 0 ∗ ∗ 0MKE (For movable, opposite direction of motor shaft) MFECA 0 ∗ ∗ 0TJE (For fixed, direction of motor shaft) MFECA 0 ∗ ∗ 0TKE (For fixed, opposite direction of motor shaft)	MFECA 0 ∗ ∗ 0MJD (For movable, direction of motor shaft) MFECA 0 ∗ ∗ 0MKD (For movable, opposite direction of motor shaft) MFECA 0 ∗ ∗ 0TJD (For fixed, direction of motor shaft) MFECA 0 ∗ ∗ 0TKD (For fixed, opposite direction of motor shaft)	MFMCA 0 ∗ ∗ 7UFD (Movable/fixed common-use, direction of motor shaft) MFMCA 0 ∗ ∗ 7UGD (Movable/fixed common-use, opposite direction of motor shaft) MFMCA 0 ∗ ∗ 0UFD (For movable, direction of motor shaft) MFMCA 0 ∗ ∗ 0UGD (For movable, opposite direction of motor shaft) MFMCA 0 ∗ ∗ 0WFD (For fixed, direction of motor shaft) MFMCA 0 ∗ ∗ 0WGD (For fixed, opposite direction of motor shaft)	MFMCA 0 ∗ ∗ 7VFD (Movable/fixed common-use, direction of motor shaft) MFMCA 0 ∗ ∗ 7VGD (Movable/fixed common-use, opposite direction of motor shaft) MFMCA 0 ∗ ∗ 0VFD (For movable, direction of motor shaft) MFMCA 0 ∗ ∗ 0VGD (For movable, opposite direction of motor shaft) MFMCA 0 ∗ ∗ 0XFD (For fixed, direction of motor shaft) MFMCA 0 ∗ ∗ 0XGD (For fixed, opposite direction of motor shaft)	–	DV0P4280	DV0P227	DV0P4170
			100	MHMF011L1 □ 1 MHMF011L1 □ 3	87, 153	MADLT11SF	MADLN11S◇											
			200	MHMF021L1 □ 1 MHMF021L1 □ 3	89, 157	MBDLT21SF	MBDLN21S◇	B-frame ★	Approx. 0.5							DV0P4283	DV0P228	
			400	MHMF041L1 □ 1 MHMF041L1 □ 3	91, 161	MCDLT31SF	MCDLN31S◇	C-frame	Approx. 0.9							DV0P4282		DV0PM20042
		Single phase/ 3-phase 200 V	50	MHMF5AZL1 □ 1 MHMF5AZL1 □ 3	86, 149	MADLT05SF	MADLN05S◇	A-frame ★	Approx. 0.5							DV0P4281	DV0P227 / DV0P220	DV0P4170 / DV0PM20042
			100	MHMF012L1 □ 1 MHMF012L1 □ 3	88, 153	MADLT05SF	MADLN05S◇											
			200	MHMF022L1 □ 1 MHMF022L1 □ 3	90, 157	MADLT15SF	MADLN15S◇									DV0P4283	DV0P228 / DV0P220	DV0PM20042
			400	MHMF042L1 □ 1 MHMF042L1 □ 3	92, 161	MBDLT25SF	MBDLN25S◇	B-frame ★	Approx. 0.9									
			750	MHMF082L1 □ 1 MHMF082L1 □ 3	93, 165	MCDLT35SF	MCDLN35S◇	C-frame	Approx. 1.8									
			1000	MHMF092L1 □ 1 MHMF092L1 □ 3	94, 169	MDDLT55SF	MDDLN55S◇	D-frame	Approx. 2.4							DV0P4284	DV0P228 / DV0P222	DV0P4220

★: Frame-A and B drivers are not equipped with regenerative resistors.When regeneration occurs, please prepare an optional external regenerative resistor.

Note)1 □ : Represents the motor specifications. (refer to “Model designation” P.22.)

Note)2 ◇ : Represents the driver specifications. (refer to “Model designation” P.22.)

Note)3 ∗ ∗ : Represents the cable length (03/3 m, 05/5 m, 10/10 m, 20/20 m). Example. 3 m/MFECA0030MJE

Note)4 Because A6SE series driver (dedicated for position control) does not support the absolute system specification, only incremental system can be used in combination.

Note)5 Please note that a battery is not supplied together with 23-bit absolute encoder cable (with battery box). Please buy the battery part number “DV0P2990” separately.

[Movable : For application where the cable is movable.
Fixed : For application where the cable is fixed.
Direction of motor shaft/Opposite direction of motor shaft : Cable direction]

100 mm sq. or more 0.85 kW to 5.0 kW

IP67 motor Encoder connector (Large size JL10) type

Motor						Driver			Power capacity (at rated load) (kVA)		Optional parts ▶ refer to P.306						
Motor series		Power supply	Output (W)	Part No. Note)1	Rating/ Spec. Dimensions (page)	A6SF series Multi fanction type (Pulse, analog, full-closed)	A6SG series RS485 communication / A6SE series Basic (Pulse signal input) Note)2, Note)4	Frame			Encoder Cable Note)3,5		Motor Cable Note)3,5		External Regenerative Resistor	Reactor (Single phase / 3-phase)	Noise Filter
											JL10 (Large size) (One-touch lock type / N/MS screwed type)		JL10 (One-touch lock type / JL04 screwed type)				
											23-bit Absolute						
											Use in the absolute system (with battery box) Note)7	Use in the Incremental system (without battery box)	without Brake	with Brake			
											Fixed cable		Movable cable				
Low inertia	MSMF Large size JL10 type 3000 r/min IP67	Single phase/ 3-phase 200 V	1000	MSMF102L1 ☐ 6 MSMF102L1 ☐ 8	73, 127	MDDLT55SF	MDDLN55S◇	D-frame	Approx.	2.4	MFECA 0＊＊0EPE / MFECA 0＊＊0ESE	MFECA 0＊＊0EPD / MFECA 0＊＊0ESD	MFMCD 0＊＊2EUD / MFMCD 0＊＊2ECD	MFMCA 0＊＊2FUD / MFMCA 0＊＊2FCD	DV0P4284	DV0P228 / DV0P222	DV0P4220
			1500	MSMF152L1 ☐ 6 MSMF152L1 ☐ 8	74, 128	MDDLT55SF	MDDLN55S◇		Approx.	2.9						DV0PM20047 / DV0P222	
		3-phase 200 V	2000	MSMF202L1 ☐ 6 MSMF202L1 ☐ 8	75, 129	MEDLT83SF	MEDLN83S◇	E-frame	Approx.	3.8					DV0P4285 Note)6	DV0P223	DV0PM20043
			3000	MSMF302L1 ☐ 6 MSMF302L1 ☐ 8	76, 131	MFDLTA3SF	MFDLNA3S◇	F-frame	Approx.	5.2			MFMCA 0＊＊3EUT / MFMCA 0＊＊3ECT	MFMCA 0＊＊3FUT / MFMCA 0＊＊3FCT	DV0P4285 ×2 in parallel	DV0P224	DV0P3410
			4000	MSMF402L1 ☐ 6 MSMF402L1 ☐ 8	77, 132	MFDLTB3SF	MFDLNB3S◇		Approx.	6.5						DV0P225	
			5000	MSMF502L1 ☐ 6 MSMF502L1 ☐ 8	78, 133	MFDLTB3SF	MFDLNB3S◇		Approx.	7.8							
Middle inertia	MDMF Large size JL10 type 2000 r/min IP67	Single phase/ 3-phase 200 V	1000	MDMF102L1 ☐ 6 MDMF102L1 ☐ 8	102, 180	MDDLT45SF	MDDLN45S◇	D-frame	Approx.	2.4	MFECA 0＊＊0EPE / MFECA 0＊＊0ESE	MFECA 0＊＊0EPD / MFECA 0＊＊0ESD	MFMCD 0＊＊2EUD / MFMCD 0＊＊2ECD	MFMCA 0＊＊2FUD / MFMCA 0＊＊2FCD	DV0P4284	DV0P228 / DV0P222	DV0P4220
			1500	MDMF152L1 ☐ 6 MDMF152L1 ☐ 8	103, 181	MDDLT55SF	MDDLN55S◇		Approx.	2.9						DV0PM20047 / DV0P222	
		3-phase 200 V	2000	MDMF202L1 ☐ 6 MDMF202L1 ☐ 8	104, 183	MEDLT83SF	MEDLN83S◇	E-frame	Approx.	3.8					DV0P4285 Note)6	DV0P223	DV0PM20043
			3000	MDMF302L1 ☐ 6 MDMF302L1 ☐ 8	105, 184	MFDLTA3SF	MFDLNA3S◇	F-frame	Approx.	5.2			MFMCA 0＊＊3EUT / MFMCA 0＊＊3ECT	MFMCA 0＊＊3FUT / MFMCA 0＊＊3FCT	DV0P4285 ×2 in parallel	DV0P224	DV0P3410
			4000	MDMF402L1 ☐ 6 MDMF402L1 ☐ 8	106, 185	MFDLTB3SF	MFDLNB3S◇		Approx.	6.5						DV0P225	
			5000	MDMF502L1 ☐ 6 MDMF502L1 ☐ 8	107, 187	MFDLTB3SF	MFDLNB3S◇		Approx.	7.8							
	MGMF Large size JL10 type (Low speed/ High torque type) 1500 r/min IP67	Single phase/ 3-phase 200 V	850	MGMF092L1 ☐ 6 MGMF092L1 ☐ 8	112, 193	MDDLT45SF	MDDLN45S◇	D-frame	Approx.	2.0	MFECA 0＊＊0EPE / MFECA 0＊＊0ESE	MFECA 0＊＊0EPD / MFECA 0＊＊0ESD	MFMCD 0＊＊2EUD / MFMCD 0＊＊2ECD	MFMCA 0＊＊2FUD / MFMCA 0＊＊2FCD	DV0P4284	DV0P228 / DV0P221	DV0P4220
			1300	MGMF132L1 ☐ 6 MGMF132L1 ☐ 8	113, 195	MDDLT55SF	MDDLN55S◇		Approx.	2.6						DV0PM20047 / DV0P222	
		3-phase 200 V	1800	MGMF182L1 ☐ 6 MGMF182L1 ☐ 8	114, 196	MEDLT83SF	MEDLN83S◇	E-frame	Approx.	3.4			MFMCE 0＊＊3EUT / MFMCE 0＊＊3ECT	MFMCD 0＊＊3FUT / MFMCD 0＊＊3FCT	DV0P4285 Note)6	DV0P223	DV0PM20043
			2400	MGMF242L1 ☐ 6 MGMF242L1 ☐ 8	115, 197	MEDLT93SF	MEDLN93S◇		Approx.	4.5						DV0P224	
			2900	MGMF292L1 ☐ 6 MGMF292L1 ☐ 8	116, 199	MFDLTB3SF	MFDLNB3S◇	F-frame	Approx.	5.0			MFMCA 0＊＊3EUT / MFMCA 0＊＊3ECT	MFMCA 0＊＊3FUT / MFMCA 0＊＊3FCT	DV0P4285 ×2 in parallel	DV0P3410	
			4400	MGMF442L1 ☐ 6 MGMF442L1 ☐ 8	117, 200	MFDLTB3SF	MFDLNB3S◇		Approx.	7.0						DV0P225	
High inertia	MHMF Large size JL10 type 2000 r/min IP67	Single phase/ 3-phase 200 V	1000	MHMF102L1 ☐ 6 MHMF102L1 ☐ 8	95, 171	MDDLT45SF	MDDLN45S◇	D-frame	Approx.	2.4	MFECA 0＊＊0EPE / MFECA 0＊＊0ESE	MFECA 0＊＊0EPD / MFECA 0＊＊0ESD	MFMCD 0＊＊2EUD / MFMCD 0＊＊2ECD	MFMCA 0＊＊2FUD / MFMCA 0＊＊2FCD	DV0P4284	DV0P228 / DV0P222	DV0P4220
			1500	MHMF152L1 ☐ 6 MHMF152L1 ☐ 8	96, 172	MDDLT55SF	MDDLN55S◇		Approx.	2.9						DV0PM20047 / DV0P222	
		3-phase 200 V	2000	MHMF202L1 ☐ 6 MHMF202L1 ☐ 8	97, 173	MEDLT83SF	MEDLN83S◇	E-frame	Approx.	3.8			MFMCE 0＊＊2EUD / MFMCE 0＊＊2ECD	MFMCE 0＊＊2FUD / MFMCE 0＊＊2FCD	DV0P4285 Note)6	DV0P223	DV0PM20043
			3000	MHMF302L1 ☐ 6 MHMF302L1 ☐ 8	98, 175	MFDLTA3SF	MFDLNA3S◇	F-frame	Approx.	5.2			MFMCA 0＊＊3EUT / MFMCA 0＊＊3ECT	MFMCA 0＊＊3FUT / MFMCA 0＊＊3FCT	DV0P4285 ×2 in parallel	DV0P224	DV0P3410
			4000	MHMF402L1 ☐ 6 MHMF402L1 ☐ 8	99, 176	MFDLTB3SF	MFDLNB3S◇		Approx.	6.5						DV0P225	
			5000	MHMF502L1 ☐ 6 MHMF502L1 ☐ 8	100, 177	MFDLTB3SF	MFDLNB3S◇		Approx.	7.8							

Note)1 ☐ : Represents the motor specifications. (refer to “Model designation” P.22.)

Note)2 ◇ : Represents the driver specifications. (refer to “Model designation” P.22.)

Note)3 ＊＊ : Represents the cable length (03/3 m, 05/5 m, 10/10 m, 20/20 m). Example. 3 m/MFECA0030EPE

Note)4 Because A6SE series driver (dedicated for position control) does not support the absolute system specification, only incremental system can be used in combination.

Note)5 Use of JL10 type encoder cables and motor cables enable one-touch lock connections. Conventional screwed type N/MS and JL04V type cables can also be used.

Note)6 For other possible combinations, refer to P.343.

Note)7 Please note that a battery is not supplied together with 23-bit absolute encoder cable (with battery box). Please buy the battery part number “DV0P2990” separately.

100 mm sq. or more 0.85 kW to 5.0 kW

IP67 motor Encoder connector (Small size JN2) type

Motor						Driver			Power capacity (at rated load) (kVA)		Optional parts ▶ refer to P.306						
Motor series		Power supply	Output (W)	Part No. Note)1	Rating/ Spec. Dimensions (page)	A6SF series Multi function type (Pulse, analog, full-closed)	A6SG series RS485 communication / A6SE series Basic (Pulse signal input) Note)2, Note)4	Frame			Encoder Cable Note)3		Motor Cable Note)3,5		External Regenerative Resistor	Reactor (Single phase / 3-phase)	Noise Filter
											JN2 (Small size) (One-touch lock type)		JL10 (One-touch lock type / JL04 screwed type)				
											23-bit Absolute						
											Use in the absolute system (with battery box) Note)7	Use in the Incremental system (without battery box)	without Brake	with Brake			
											Fixed cable		Movable cable				
Low inertia	MSMF Small size JN2 type 3000 r/min IP67	Single phase/ 3-phase 200 V	1000	MSMF102L1 □ 5 MSMF102L1 □ 7	73, 127	MDDLT55SF	MDDLN55S◇	D-frame	Approx.	2.4	MFECA 0＊＊0ETE	MFECA 0＊＊0ETD	MFMCD 0＊＊2EUD / MFMCD 0＊＊2ECD	MFMCA 0＊＊2FUD / MFMCA 0＊＊2FCD	DV0P4284	DV0P228 / DV0P222	DV0P4220
			1500	MSMF152L1 □ 5 MSMF152L1 □ 7	74, 129	MDDLT55SF	MDDLN55S◇		Approx.	2.9						DV0PM20047 / DV0P222	
		3-phase 200 V	2000	MSMF202L1 □ 5 MSMF202L1 □ 7	75, 130	MEDLT83SF	MEDLN83S◇	E-frame	Approx.	3.8					DV0P4285 Note)6	DV0P223	DV0PM20043
			3000	MSMF302L1 □ 5 MSMF302L1 □ 7	76, 131	MFDLTA3SF	MFDLNA3S◇	F-frame	Approx.	5.2			MFMCA 0＊＊3EUT / MFMCA 0＊＊3ECT	MFMCA 0＊＊3FUT / MFMCA 0＊＊3FCT	DV0P4285 ×2 in parallel	DV0P224	DV0P3410
			4000	MSMF402L1 □ 5 MSMF402L1 □ 7	77, 133	MFDLTB3SF	MFDLNB3S◇		Approx.	6.5						DV0P225	
			5000	MSMF502L1 □ 5 MSMF502L1 □ 7	78, 134	MFDLTB3SF	MFDLNB3S◇		Approx.	7.8							
Middle inertia	MDMF Small size JN2 type 2000 r/min IP67	Single phase/ 3-phase 200 V	1000	MDMF102L1 □ 5 MDMF102L1 □ 7	102, 181	MDDLT45SF	MDDLN45S◇	D-frame	Approx.	2.4	MFECA 0＊＊0ETE	MFECA 0＊＊0ETD	MFMCD 0＊＊2EUD / MFMCD 0＊＊2ECD	MFMCA 0＊＊2FUD / MFMCA 0＊＊2FCD	DV0P4284	DV0P228 / DV0P222	DV0P4220
			1500	MDMF152L1 □ 5 MDMF152L1 □ 7	103, 182	MDDLT55SF	MDDLN55S◇		Approx.	2.9						DV0PM20047 / DV0P222	
		3-phase 200 V	2000	MDMF202L1 □ 5 MDMF202L1 □ 7	104, 183	MEDLT83SF	MEDLN83S◇	E-frame	Approx.	3.8					DV0P4285 Note)6	DV0P223	DV0PM20043
			3000	MDMF302L1 □ 5 MDMF302L1 □ 7	105, 185	MFDLTA3SF	MFDLNA3S◇	F-frame	Approx.	5.2			MFMCA 0＊＊3EUT / MFMCA 0＊＊3ECT	MFMCA 0＊＊3FUT / MFMCA 0＊＊3FCT	DV0P4285 ×2 in parallel	DV0P224	DV0P3410
			4000	MDMF402L1 □ 5 MDMF402L1 □ 7	106, 186	MFDLTB3SF	MFDLNB3S◇		Approx.	6.5						DV0P225	
			5000	MDMF502L1 □ 5 MDMF502L1 □ 7	107, 187	MFDLTB3SF	MFDLNB3S◇		Approx.	7.8							
	MGMF Small size JN2 type (Low speed/ High torque type) 1500 r/min IP67	Single phase/ 3-phase 200 V	850	MGMF092L1 □ 5 MGMF092L1 □ 7	112, 194	MDDLT45SF	MDDLN45S◇	D-frame	Approx.	2.0	MFECA 0＊＊0ETE	MFECA 0＊＊0ETD	MFMCD 0＊＊2EUD / MFMCD 0＊＊2ECD	MFMCA 0＊＊2FUD / MFMCA 0＊＊2FCD	DV0P4284	DV0P228 / DV0P221	DV0P4220
			1300	MGMF132L1 □ 5 MGMF132L1 □ 7	113, 195	MDDLT55SF	MDDLN55S◇		Approx.	2.6						DV0PM20047 / DV0P222	
		3-phase 200 V	1800	MGMF182L1 □ 5 MGMF182L1 □ 7	114, 197	MEDLT83SF	MEDLN83S◇	E-frame	Approx.	3.4					DV0P4285 Note)6	DV0P223	DV0PM20043
			2400	MGMF242 L1 □ 5 MGMF242 L1 □ 7	115, 198	MEDLT93SF	MEDLN93S◇		Approx.	4.5			MFMCE 0＊＊3EUT / MFMCE 0＊＊3ECT	MFMCD 0＊＊3FUT / MFMCD 0＊＊3FCT		DV0P224	
			2900	MGMF292L1 □ 5 MGMF292L1 □ 7	116, 199	MFDLTB3SF	MFDLNB3S◇	F-frame	Approx.	5.0			MFMCA 0＊＊3EUT / MFMCA 0＊＊3ECT	MFMCA 0＊＊3FUT / MFMCA 0＊＊3FCT	DV0P4285 ×2 in parallel	DV0P225	DV0P3410
			4400	MGMF442L1 □ 5 MGMF442L1 □ 7	117, 201	MFDLTB3SF	MFDLNB3S◇		Approx.	7.0							
High inertia	MHMF Small size JN2 type 2000 r/min IP67	Single phase/ 3-phase 200 V	1000	MHMF102L1 □ 5 MHMF102L1 □ 7	95, 171	MDDLT45SF	MDDLN45S◇	D-frame	Approx.	2.4	MFECA 0＊＊0ETE	MFECA 0＊＊0ETD	MFMCD 0＊＊2EUD / MFMCD 0＊＊2ECD	MFMCA 0＊＊2FUD / MFMCA 0＊＊2FCD	DV0P4284	DV0P228 / DV0P222	DV0P4220
			1500	MHMF152L1 □ 5 MHMF152L1 □ 7	96, 173	MDDLT55SF	MDDLN55S◇		Approx.	2.9						DV0PM20047 / DV0P222	
		3-phase 200 V	2000	MHMF202L1 □ 5 MHMF202L1 □ 7	97, 174	MEDLT83SF	MEDLN83S◇	E-frame	Approx.	3.8			MFMCE 0＊＊2EUD / MFMCE 0＊＊2ECD	MFMCE 0＊＊2FUD / MFMCE 0＊＊2FCD	DV0P4285 Note)6	DV0P223	DV0PM20043
			3000	MHMF302L1 □ 5 MHMF302L1 □ 7	98, 175	MFDLTA3SF	MFDLNA3S◇	F-frame	Approx.	5.2			MFMCA 0＊＊3EUT / MFMCA 0＊＊3ECT	MFMCA 0＊＊3FUT / MFMCA 0＊＊3FCT	DV0P4285 ×2 in parallel	DV0P224	DV0P3410
			4000	MHMF402L1 □ 5 MHMF402L1 □ 7	99, 177	MFDLTB3SF	MFDLNB3S◇		Approx.	6.5						DV0P225	
			5000	MHMF502L1 □ 5 MHMF502L1 □ 7	100, 178	MFDLTB3SF	MFDLNB3S◇		Approx.	7.8							

Note)1 □ : Represents the motor specifications. (refer to “Model designation” P.22.)
Note)2 ◇ : Represents the driver specifications. (refer to “Model designation” P.22.)
Note)3 ＊＊ : Represents the cable length (03/3 m, 05/5 m, 10/10 m, 20/20 m). Example. 3 m/MFECA0030ETE
Note)4 Because A6SE series driver (dedicated for position control) does not support the absolute system specification, only incremental system can be used in combination.
Note)5 Use of JL10 type motor cables enable one-touch lock connections. Conventional screwed type JL04V type cables can also be used.
Note)6 For other possible combinations, refer to P.343.
Note)7 Please note that a battery is not supplied together with 23-bit absolute encoder cable (with battery box). Please buy the battery part number “DV0P2990” separately.

176 mm sq. or more 5.5 kW to 22.0 kW

IP67 motor Encoder connector (Large size JL10) type

Motor					Driver			Power capacity (at rated load) (kVA)		Optional parts ▶ refer to P.306					
Motor series		Power supply	Output (W)	Part No. Note)1	Rating/ Spec. Dimensions (page)	A6SF series Multi function type (Pulse, analog, full-closed)	A6SG series RS485 communication / A6SE series Basic (Pulse signal input)	Frame			Encoder Cable Note)2,3 JL10 (Large size) (One-touch lock type / N/MS screwed type)		Motor Cable Note)6		External Regenerative Resistor	Reactor (Single phase / 3-phase)	Noise Filter
											23-bit Absolute						
											Use in the absolute system (with battery box) Note)4	Use in the Incremental system (without battery box)	without Brake	with Brake			
											Fixed cable						
Middle inertia	MDMF Large size JL10 type 1500 r/min IP67 IP44 (22000 W)	3-phase 200 V	7500	MDMF752L1 □ 6	108 188	MGDLTC3SF	—	G-frame	Approx. 11		MFECA 0＊＊0EPE / MFECA 0＊＊0ESE	MFECA 0＊＊0EPD / MFECA 0＊＊0ESD	Note)6	Note)6	DV0P4285 ×3 in parallel	— Note)5	HF3080C-SZA (Recommended components) P.413
			11000	MDMFC12L1 □ 6	109 189	MHDLTE3SF	—	H-frame	Approx. 15						DV0P4285 ×6 in parallel		HF3100C-SZA (Recommended components) P.413
			15000	MDMFC52L1 □ 6	110 191	MHDLTE3SF	—		Approx. 20								
			22000	MDMFD22L1 □ 6	111 192	MHDLTF3SF	—		Approx. 28				Note)6 (U, V, W, Ground : M8 terminal block)	Note)6 (U, V, W, Ground : M8 terminal block)			
	MGMF Large size JL10 type (Low speed/ High torque type) 1500 r/min IP67	3-phase 200 V	5500	MGMF552L1 □ 6	118 201	MGDLTC3SF	—	G-frame	Approx. 8.5		MFECA 0＊＊0EPE / MFECA 0＊＊0ESE	MFECA 0＊＊0EPD / MFECA 0＊＊0ESD	Note)6	Note)6	DV0P4285 ×3 in parallel	— Note)5	HF3080C-SZA (Recommended components) P.413
High inertia	MHMF Large size JL10 type 1500 r/min IP67	3-phase 200 V	7500	MHMF752L1 □ 6	101 179	MGDLTC3SF	—	G-frame	Approx. 11		MFECA 0＊＊0EPE / MFECA 0＊＊0ESE	MFECA 0＊＊0EPD / MFECA 0＊＊0ESD	Note)6	Note)6		— Note)5	HF3080C-SZA (Recommended components) P.413

■ About dynamic brake

G frame is built-in / external, H frame is external

The indication of the internal / {external} dynamic brake resistance capacity is the maximum allowable inertia (load inertia moment ratio to rotor inertia moment is 10 times) up to three consecutive emergency stops at the rated speed. If used under conditions higher than that, the resistance may break and the dynamic brake may not operate.

Recommended resistance: 1.2 Ω 400 W or more × 3 pieces

For inquiries: Iwaki Musen Kenkyusho Co.,Ltd. Tel: +81-44-833-4311

Note)1 □ : Represents the motor specifications. (refer to “Model designation” P.22.)

Note)2 ＊＊ : Represents the cable length (03/3 m, 05/5 m, 10/10 m, 20/20 m). Example. 3 m/MFECA0030ETE

Note)3 Use of JL10 type encoder cables and motor cables enable one-touch lock connections. Conventional screwed type N/MS and JL04V type cables can also be used.

Note)4 Please note that a battery is not supplied together with 23-bit absolute encoder cable (with battery box). Please buy the battery part number “DV0P2990” separately.

Note)5 The reactor has to be prepared by the customer.

Note)6 We recommend purchasing an optional connector kit.

■ Connector kit (option) components Note)6

Motor	Driver		Option No. Connector Kit for motor, encoder connection	Encoder Cable		Motor Cable		Brake Cable	
	Frame	Connection terminal		Motor side	Driver side	Motor side	Driver side	Motor side	Power supply for brake
MDMF 7.5 kW MGMF 5.5 kW MHMF 7.5 kW	G	M5	DV0PM20107	Large size connector One-touch lock type	For Connector X6	Connector Screwed type	(to be supplied by customer) M5 Round terminal	not included	(to be supplied by customer)
			DV0PM20108					Connector Screwed type	
			DV0PM20111	Large size connector Screwed type				not included	
			DV0PM20112					Connector Screwed type	
MDMF 11.0 kW MDMF 15.0 kW	H	M6	DV0PM20107	Large size connector One-touch lock type	For Connector X6	Connector Screwed type	(to be supplied by customer) M6 Round terminal	not included	(to be supplied by customer)
			DV0PM20108					Connector Screwed type	
			DV0PM20111	Large size connector Screwed type				not included	
			DV0PM20112					Connector Screwed type	
MDMF 22.0 kW	H	M6	DV0PM20109	Large size connector One-touch lock type	For Connector X6	Terminal block (to be supplied by customer) M8 Round terminal	(to be supplied by customer) M6 Round terminal	not included	(to be supplied by customer)
			DV0PM20110					Connector Screwed type	
			DV0PM20113	Large size connector Screwed type				not included	
			DV0PM20114					Connector Screwed type	

176 mm sq. or more 5.5 kW to 22.0 kW

IP67 motor Encoder connector (Small size JN2) type

Motor						Driver			Power capacity (at rated load) (kVA)		Optional parts ▶ refer to P.306						
Motor series		Power supply	Output (W)	Part No. Note)1	Rating/ Spec. Dimensions (page)	A6SF series Multi fanction type (Pulse, analog, full-closed)	A6SG series RS485 communication / A6SE series Basic (Pulse signal input)	Frame			Encoder Cable Note)2		Motor Cable Note)5		External Regenerative Resistor	Reactor (Single phase / 3-phase)	Noise Filter
											JN2 (Small size) (One-touch lock type)						
											23-bit Absolute						
											Use in the absolute system (with battery box) Note)3	Use in the Incremental system (without battery box)	without Brake	with Brake			
											Fixed cable						
Middle inertia	MDMF Small size JN2 type 1500 r/min IP67 IP44 (22000 W)	3-phase 200 V	7500	MDMF752L1 □ 5	108 189	MGDLTC3SF	—	G-frame	Approx.	11	MFECA 0＊＊0ETE	MFECA 0＊＊0ETD	Note)5	Note)5	DV0P4285 ×3 in parallel	— Note)4	HF3080C-SZA (Recommended components) P.413
			11000	MDMFC12L1 □ 5	109 190	MHDLTE3SF	—	H-frame	Approx.	15					DV0P4285 ×6 in parallel		HF3100C-SZA (Recommended components) P.413
			15000	MDMFC52L1 □ 5	110 191	MHDLTE3SF	—		Approx.	20							
			22000	MDMFD22L1 □ 5	111 193	MHDLTF3SF	—		Approx.	28			Note)5 (U, V, W, Ground : M8 terminal block)	Note)5 (U, V, W, Ground : M8 terminal block)			
	MGMF Small size JN2 type (Low speed/ High torque type) 1500 r/min IP67	3-phase 200 V	5500	MGMF552L1 □ 5	118 202	MGDLTC3SF	—	G-frame	Approx.	8.5	MFECA 0＊＊0ETE	MFECA 0＊＊0ETD	Note)5	Note)5	DV0P4285 ×3 in parallel	— Note)4	HF3080C-SZA (Recommended components) P.413
High inertia	MHMF Small size JN2 type 1500 r/min IP67	3-phase 200 V	7500	MHMF752L1 □ 5	101 179	MGDLTC3SF	—	G-frame	Approx.	11	MFECA 0＊＊0ETE	MFECA 0＊＊0ETD	Note)5	Note)5		— Note)4	HF3080C-SZA (Recommended components) P.413

■ About dynamic brake

G frame is built-in / external, H frame is external

The indication of the internal / {external} dynamic brake resistance capacity is the maximum allowable inertia (load inertia moment ratio to rotor inertia moment is 10 times) up to three consecutive emergency stops at the rated speed. If used under conditions higher than that, the resistance may break and the dynamic brake may not operate.

Recommended resistance: 1.2 Ω 400 W or more × 3 pieces

For inquiries: Iwaki Musen Kenkyusho Co.,Ltd. Tel: +81-44-833-4311

■ Connector kit (option) components Note)5

Motor	Driver		Option No. Connector Kit for motor, encoder connection	Encoder Cable		Motor Cable		Brake Cable	
	Frame	Connection terminal		Motor side	Driver side	Motor side	Driver side	Motor side	Power supply for brake
MDMF 7.5 kW MGMF 5.5 kW MHMF 7.5 kW	G	M5	DV0PM20056	Small size connector Screwed type	For Connector X6	Connector Screwed type	(to be supplied by customer) M5 Round terminal	not included	(to be supplied by customer)
			DV0PM20057					Connector Screwed type	
MDMF 11.0 kW MDMF 15.0 kW	H	M6	DV0PM20056	Small size connector Screwed type	For Connector X6	Connector Screwed type	(to be supplied by customer) M6 Round terminal	not included	(to be supplied by customer)
			DV0PM20057					Connector Screwed type	
MDMF 22.0 kW	H	M6	DV0PM20115	Small size connector Screwed type	For Connector X6	Terminal block (to be supplied by customer) M8 Round terminal	(to be supplied by customer) M6 Round terminal	not included	(to be supplied by customer)
			DV0PM20116					Connector Screwed type	

Note)1 □ : Represents the motor specifications. (refer to “Model designation” P.22.)

Note)2 ＊＊ : Represents the cable length (03/3 m, 05/5 m, 10/10 m, 20/20 m). Example. 3 m/MFECA0030ETE

Note)3 Please note that a battery is not supplied together with 23-bit absolute encoder cable (with battery box). Please buy the battery part number “DV0P2990” separately.

Note)4 The reactor has to be prepared by the customer.

Note)5 We recommend purchasing an optional connector kit.

Basic Specifications

Input power	100 V	Main circuit		Single phase 100 V +10 % –15 % to 120 V +10 % –15 % 50 Hz / 60 Hz
		Control circuit		Single phase 100 V +10 % –15 % to 120 V +10 % –15 % 50 Hz / 60 Hz
	200 V	Main circuit	A-frame to D-frame	Single/3-phase 200 V +10 % –15 % to 240 V +10 % –15 % 50 Hz / 60 Hz
			E-frame to H-frame	3-phase 200 V +10 % –15 % to 240 V +10 % –15 % 50 Hz / 60 Hz
		Control circuit	A-frame to D-frame	Single phase 200 V +10 % –15 % to 240 V +10 % –15 % 50 Hz / 60 Hz
			E-frame to H-frame	Single phase 200 V +10 % –15 % to 240 V +10 % –15 % 50 Hz / 60 Hz
Environment		temperature		Ambient temperature: 0 ˚C to 55 ˚C (free from freezing) Storage temperature: –20 ˚C to 65 ˚C (Max.temperature guarantee: 80 ˚C for 72 hours free from condensation*1)
		humidity		Both operating and storage : 20 %RH to 85 %RH (free from condensation*1)
		Altitude		Lower than 1000 m
		Vibration		5.88 m/s^2 or less, 10 Hz to 60 Hz
Control method				IGBT PWM Sinusoidal wave drive
Encoder feedback				23-bit (8388608 resolution) absolute encoder, 7-wire serial * When using it as an incremental system (not using multi-turn data), do not connect the battery for absolute encoder. Parameter Pr. 0.15 must be set to “1” (factory settings).
External scale feedback				A/B phase, homing signal differential input. Serial communication is also supported. Manufacturers that support serial communication scale: Fagor Automation S.Coop., HEIDENHAIN, Magnescale Co., Ltd., Mitutoyo Corporation Nidec Sankyo Corporation, Renishaw plc
Interface connector	Control signal		Input	General purpose 10 inputs The function of general-purpose input is selected by parameters.
			Output	General purpose 6 outputs The function of general-purpose output is selected by parameters.
	Analog signal		Input	3 inputs (16-bit A/D : 1 input, 12-bit A/D : 2 inputs)
			Output	2 outputs (Analog monitor: 2 output)
	Pulse signal		Input	2 inputs (Photo-coupler input, Line receiver input) Both open collector and line driver interface can be connected. High speed line driver interface can be connected.
			Output	4 outputs (Line driver: 3 output, open collector: 1 output) Line driver output for encoder pulses (A/B/Z signal) or external feedback pulses (EXA/EXB/EXZ signal) open collector output also available for Z or EXZ signal.
	Communication function		USB	USB interface to connect to computers for parameter setting or status monitoring.
			RS232	1:1 communication
			RS485	1: n communication (max 31) (Supports Modbus)
Safety function				A dedicated connector is provided for Functional Safety.
Front panel				(1) 5 keys (2) LED (6-digit)
Regeneration				A-frame, B-frame, G-frame, H-frame: no built-in regenerative resistor (external resistor only) C-frame to F-frame: Built-in regenerative resistor (external resistor is also enabled.)
Dynamic brake				A-frame to G-frame: Built-in H-frame: External resistor only
Control mode				Switching among the following 7 mode is enabled, (1) Position control (2) Speed control (3) Toque control (4) Position/Speed control (5) Position/Torque control (6) Speed/Torque control (7) Full-closed control

*1 Air containing water vapor will become saturated with water vapor as the temperature falls, causing dew.

Function

Control input			(1) servo-ON input (2) Alarm clear input (3) Gain switch input (4) Positive direction drive inhibit input (5) Negative direction drive inhibit input (6) Forced alarm input (7) Inertia ratio switch input
Control output			(1) Servo-alarm output (2) Servo-ready output (3) External brake off output (4) At-speed output (5) Torque in-limit output (6) Zero speed detection output (7) Warning output (8) Alarm clear attribute output (9) Servo on status output
Position control	Control input		(1) Deviation counter clear input (2) Command pulse inhibit input (3) Command division/multiplication switch input (4) Anti-vibration switch input (5) Torque limit switch input (6) Control mode switch input
	Control output		(1) In-position output (2) Position command ON/OFF output
	Pulse input	Max. command pulse frequency	500 kpps (Optocoupler interface), 8 Mpps (When using line receiver input multiplied by 4)
		Input pulse signal format	Differential input. Selectable by parameter. ([1]Positive/Negative pulse [2]A/B quadrature [3]Pulse/Direction)
		Electronic gear (Division/Multiplication of command pulse)	Applicable scaling ratio: 1/1000 times to 8000 times Any value of 1 - 2^{30} can be set for both numerator (which corresponds to encoder resolution) and denominator (which corresponds to command pulse resolution per motor revolution), but the combination has to be within the range shown above.
		Smoothing filter	Primary delay filter or FIR type filter is adaptable to the command input
	Analog input	Torque limit command input	Individual torque limit for both positive and negative direction is enabled.
		Torque feed forward input	Analog voltage can be used as torque feed forward input.
	Two-degree-of-freedom control		Available
	Anti-vibration control		Available
	Load variation suppression control		Available
	Block operation		Modbus (RS 232, RS 485) or interface is selectable
Speed control	Control input		(1) Internal command velocity selection input (2) Speed zero clamp input (3) Velocity command sign input (4) Control mode switch input
	Control output		(1) Speed coincidence output (2) Velocity command ON/OFF output
	Analog input	Velocity command input	Velocity command input with analog voltage is possible. Scale setting and command polarity vary depending on parameters. (6 V/Rated rotational speed: Default)
		Torque limit command input	Individual torque limit for both positive and negative direction is enabled.
		Torque feed forward input	Analog voltage can be used as torque feed forward input.
	Internal velocity command		Switching the internal 8 speed is enabled by command input.
	Soft-start/down function		Individual setup of acceleration and deceleration is enabled, with 0 s to 10 s/1000 r/min. Sigmoid acceleration/deceleration is also enabled.
	Speed zero clamp		Internal velocity command can be clamped to 0 with speed zero clamp input.
	Two-degree-of-freedom control		Available
Torque control	Control input		Speed zero clamp input, torque command sign input, control mode switch input.
	Control output		(1) Speed coincidence output (2) Speed in-limit output
	Analog input	Torque command input	Torque command input with analog voltage is possible. Scale setting and command polarity vary depending on parameters. (3 V/rated torque Default)
	Speed limit function		Speed limit value with parameter is enabled.
Full-closed control	Control input		(1) Deviation counter clear input (2) Command pulse inhibit input (3) Command division/multiplication switch input (4) Anti-vibration switch input (5) Torque limit switch input
	Control output		(1) In-position output (2) Position command ON/OFF output
	Pulse input	Max. command pulse frequency	500 kpps (Optocoupler interface), 8 Mpps (When using line receiver input multiplied by 4)
		Input pulse signal format	Differential input. Selectable by parameter. ([1]Positive/Negative pulse [2]A/B quadrature [3]Pulse/Direction)
		Electronic gear (Division/Multiplication of command pulse)	Applicable scaling ratio: 1/1000 times to 8000 times Any value of 1 - 2^{30} can be set for both numerator (which corresponds to encoder resolution) and denominator (which corresponds to command pulse resolution per motor revolution), but the combination has to be within the range shown above.
		Smoothing filter	Primary delay filter or FIR type filter is adaptable to the command input
	Analog input	Torque limit command input	Individual torque limit for both positive and negative direction is enabled.
		Torque feed forward input	Analog voltage can be used as torque feed forward input.
	Setting range of external scale division/multiplication		1/40 times to 1280 times Although ratio of the encoder pulse (numerator) and external scale pulse (denominator) can be arbitrarily set in the range of 1 to 2^{23} for the numerator and in the range of 1 to 2^{23} for the denominator, this product should be used within the aforementioned range.
	Two-degree-of-freedom control		Available
	Anti-vibration control		Available
	Load variation suppression control		Available
	Block operation		Modbus (RS 232, RS 485) or interface is selectable
Common	Auto tuning		The load inertia is identified in real time by the driving state of the motor operating according to the command given by the controlling device and set up support software “PANATERM”. The gain is set automatically in accordance with the rigidity setting.
	Division of encoder feedback pulse		Set up of any value is enabled (encoder pulses count is the max.).
	Protective function	Hard error	Over-voltage, under-voltage, over-speed, over-load, over-heat, over-current and encoder error etc.
		Soft error	Excess position deviation, command pulse division error, EEPROM error etc.
	Alarm data trace back		Tracing back of alarm data is available

Basic Specifications

Input power	100 V	Main circuit		Single phase 100 V +10 % –15 % to 120 V +10 % –15 % 50 Hz / 60 Hz
		Control circuit		Single phase 100 V +10 % –15 % to 120 V +10 % –15 % 50 Hz / 60 Hz
	200 V	Main circuit	A-frame to D-frame	Single/3-phase 200 V +10 % –15 % to 240 V +10 % –15 % 50 Hz / 60 Hz
			E-frame to F-frame	3-phase 200 V +10 % –15 % to 240 V +10 % –15 % 50 Hz / 60 Hz
		Control circuit	A-frame to D-frame	Single phase 200 V +10 % –15 % to 240 V +10 % –15 % 50 Hz / 60 Hz
			E-frame to F-frame	Single phase 200 V +10 % –15 % to 240 V +10 % –15 % 50 Hz / 60 Hz
Environment		temperature		Ambient temperature: 0 ˚C to 55 ˚C (free from freezing) Storage temperature: –20 ˚C to 65 ˚C (Max.temperature guarantee: 80 ˚C for 72 hours free from condensation*1)
		humidity		Both operating and storage : 20 %RH to 85 %RH (free from condensation*1)
		Altitude		Lower than 1000 m
		Vibration		5.88 m/s^2 or less, 10 Hz to 60 Hz
Control method				IGBT PWM Sinusoidal wave drive
Encoder feedback				23-bit (8388608 resolution) absolute encoder, 7-wire serial * A6SG series When using it as an incremental system (not using multi-turn data), do not connect the battery for absolute encoder. Parameter Pr. 0.15 must be set to “1” (factory settings). * A6SE series Since it can be used only as an incremental system, do not connect the battery for absolute encoder. Parameter Pr. 0.15 must be set to “1” (factory settings).
Interface connector	Control signal		Input	General purpose 10 inputs The function of general-purpose input is selected by parameters.
			Output	General purpose 6 outputs The function of general-purpose input is selected by parameters.
	Analog signal		Input	None
			Output	2 outputs (Analog monitor: 2 output)
	Pulse signal		Input	2 inputs (Photo-coupler input, Line receiver input)
			Output	4 outputs (Line driver: 3 output, open collector: 1 output)
Communication function			USB	USB interface to connect to computers for parameter setting or status monitoring.
			RS232	1:1 communication
			RS485	1: n communication (max 31)
Front panel				(1) 5 keys (2) LED (6-digit)
Regeneration				A-frame, B,-frame: no built-in regenerative resistor (external resistor only) C-frame to F-frame: Built-in regenerative resistor (external resistor is also enabled.)
Dynamic brake				A-frame to F-frame: Built-in
Control mode				(1) Position control (2) Internal velocity command (3) Position/Internal velocity command

* RS485, RS232 connector is not installed on A6 SE series.

*1 Air containing water vapor will become saturated with water vapor as the temperature falls, causing dew.

Function

Control input			(1) servo-ON input (2) Alarm clear input (3) Gain switch input (4) Positive direction drive inhibit input (5) Negative direction drive inhibit input (6) Forced alarm input (7) Inertia ratio switch input
Control output			(1) Servo-alarm output (2) Servo-ready output (3) External brake off output (4) At-speed output (5) Torque in-limit output (6) Zero speed detection output (7) Warning output (8) Alarm clear attribute output (9) Servo on status output
Position control	Control input		(1) Deviation counter clear input (2) Command pulse inhibit input (3) Command division/multiplication switch input (4) Anti-vibration switch input (5) Torque limit switch input (6) Control mode switch input
	Control output		(1) In-position output (2) Position command ON/OFF output
	Pulse input	Max. command pulse frequency	500 kpps (Optocoupler interface) 8 Mpps (Line receiver interface)
		Input pulse signal format	Differential input. Selectable by parameter. ([1]Positive/Negative pulse [2]A/B quadrature [3]Pulse/Direction)
		Electronic gear (Division/Multiplication of command pulse)	Applicable scaling ratio: 1/1000 times to 8000 times Any value of 1 - 2^{30} can be set for both numerator (which corresponds to encoder resolution) and denominator (which corresponds to command pulse resolution per motor revolution), but the combination has to be within the range shown above.
		Smoothing filter	Primary delay filter or FIR type filter is adaptable to the command input
	Anti-vibration control		Available
	Two-degree-of-freedom control		Available
	Load variation suppression control		Available
	Block operation		Modbus (RS 232, RS 485) or interface is selectable. (A6SE : interface only.)
Speed control	Control input		(1) Internal command velocity selection input (2) Speed zero clamp input (3) Velocity command sign input (4) Control mode switch input
	Control output		(1) Speed coincidence output (2) Velocity command ON/OFF output
	Internal velocity command		Switching the internal 8 speed is enabled by command input.
	Soft-start/down function		Individual setup of acceleration and deceleration is enabled, with 0 s to 10 s/1000 r/min. Sigmoid acceleration/deceleration is also enabled.
	Zero-speed clamp		Internal velocity command can be clamped to 0 with speed zero clamp input.
	Two-degree-of-freedom control		Available
Common	Auto tuning		The load inertia is identified in real time by the driving state of the motor operating according to the command given by the controlling device and set up support software “PANATERM”. The gain is set automatically in accordance with the rigidity setting.
	Division of encoder feedback pulse		Set up of any value is enabled (encoder pulses count is the max.).
	Protective function	Hard error	Over-voltage, under-voltage, over-speed, over-load, over-heat, over-current and encoder error etc.
		Soft error	Excess position deviation, command pulse division error, EEPROM error etc.
	Alarm data trace back		Tracing back of alarm data is available

In Case of Single phase, A-frame, B-frame, 100 V / 200 V type

● In Case of Leadwire type

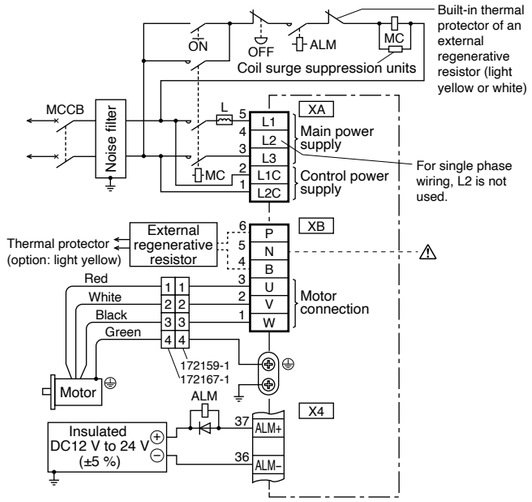

● In Case of Connector type

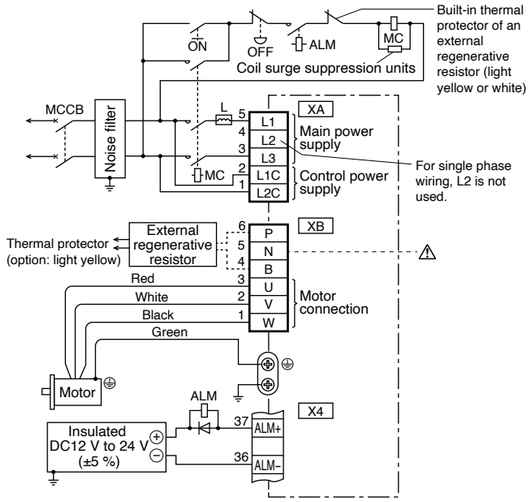

● The pin number of X4 is based on the factory setting parameters.
* Power supply for motor brake and connector X4 requires insulation. Do not connect to the same power supply.

In Case of 3-phase, A-frame, B-frame, 200 V type

● In Case of Leadwire type

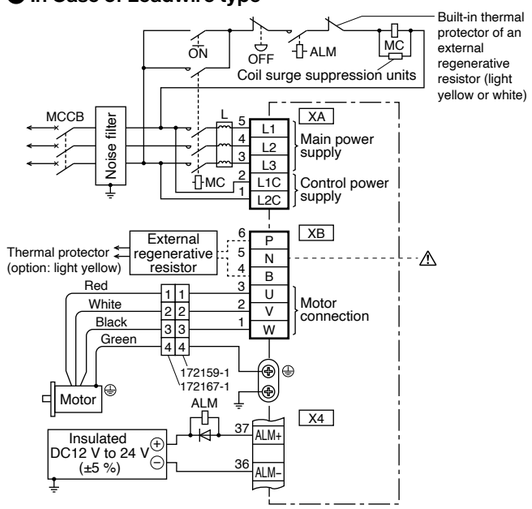

● In Case of Connector type

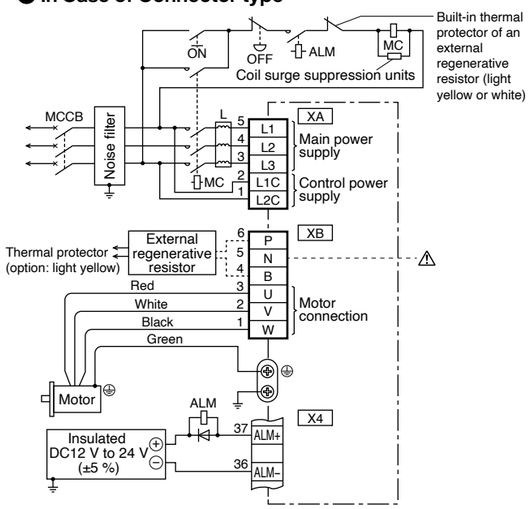

● The pin number of X4 is based on the factory setting parameters.
* Power supply for motor brake and connector X4 requires insulation. Do not connect to the same power supply.

Connect an external regenerative resistor.

Frame No.	Short wire (Accessory)	Built-in regenerative resistor	Connection of the connector XB ⚠ Do not connect anything to N.	
			In case of using an external regenerative resistor	In case of not using an external regenerative resistor
A-frame B-frame	without	without	• Connect an external regenerative resistor between P-B.	• Always open between P-B.

*** Refer to P.307 Specifications of Motor connector.**

In Case of Single phase, C-frame, D-frame, 100 V / 200 V type

● In Case of Leadwire type

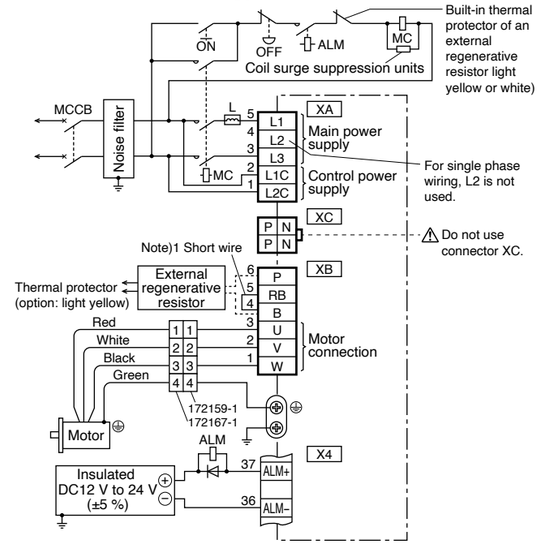

● In Case of Connector type

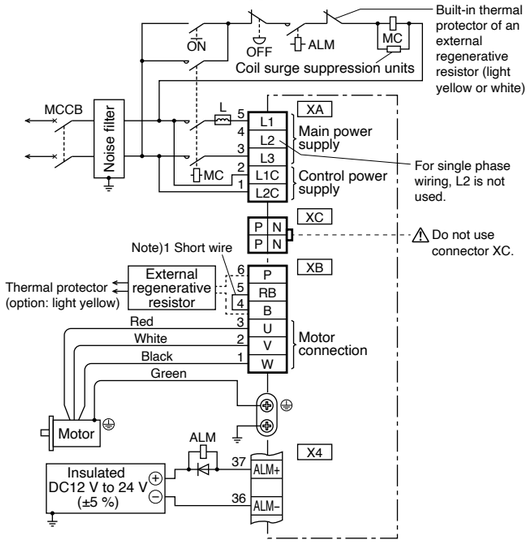

● The pin number of X4 is based on the factory setting parameters.
* Power supply for motor brake and connector X4 requires insulation. Do not connect to the same power supply.

In Case of 3-phase, C-frame, D-frame, 200 V type

● In Case of Leadwire type

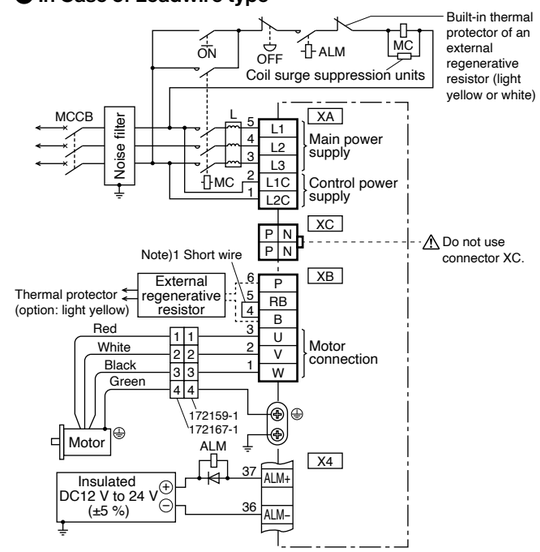

● In Case of Connector type

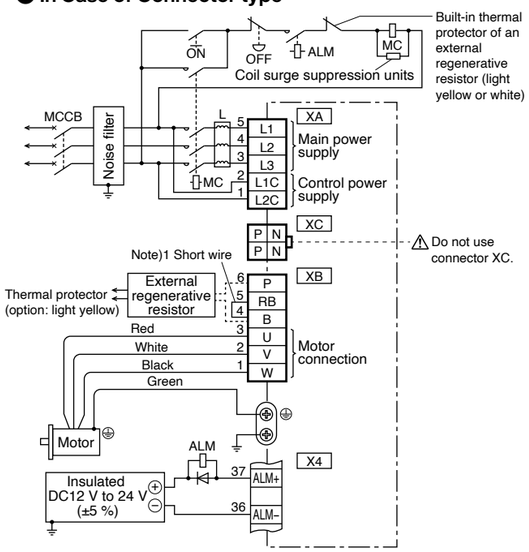

● The pin number of X4 is based on the factory setting parameters.
* Power supply for motor brake and connector X4 requires insulation. Do not connect to the same power supply.

Note)1

Frame No.	Short wire (Accessory)	Built-in regenerative resistor	Connection of the connector XB ⚠ Do not connect anything to N.	
			In case of using an external regenerative resistor	In case of not using an external regenerative resistor
C-frame D-frame	with	with	• Remove the short wire accessory from between RB-B. • Connect an external regenerative resistor between P-B.	• Shorted between RB-B with an attached short wire

*** Refer to P.307, P.308, Specifications of Motor connector.**

In Case of 3-phase, E-frame, 200 V type

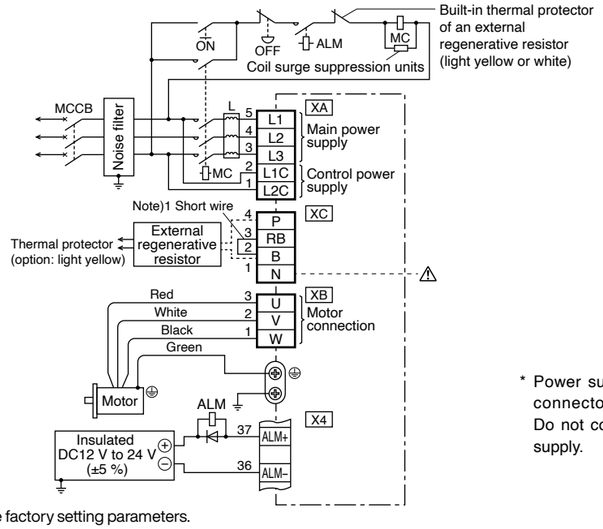

* Power supply for motor brake and connector X4 requires insulation. Do not connect to the same power supply.

● The pin number of X4 is based on the factory setting parameters.

Note)1

Frame No.	Short wire (Accessory)	Built-in regenerative resistor	Connection of the connector XC ⚠ Do not connect anything to N.	
			In case of using an external regenerative resistor	In case of not using an external regenerative resistor
E-frame	with	with	• Remove the short wire accessory from between RB-B. • Connect an external regenerative resistor between P-B.	• Shorted between RB-B with an attached short wire

In Case of 3-phase, F-frame, 200 V type

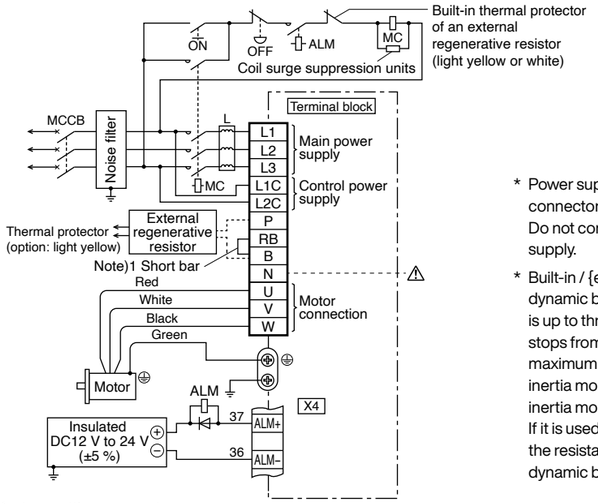

* Power supply for motor brake and connector X4 requires insulation. Do not connect to the same power supply.

* Built-in / {external} The standard of the dynamic brake resistance's capability is up to three consecutive emergency stops from the rated speed at the maximum allowable inertia (load inertia moment ratio 10 times the rotor inertia moment).
If it is used under more conditions, the resistance may be broken and the dynamic brake may not operate.

● The pin number of X4 is based on the factory setting parameters.

Note)1

Frame No.	Short bar (Accessory)	Built-in regenerative resistor	Connection of terminal block ⚠ Do not connect anything to N.	
			In case of using an external regenerative resistor	In case of not using an external regenerative resistor
F-frame	with	with	• Remove the short bar accessory from between RB-B. • Connect an external regenerative resistor between P-B.	• Shorted between RB-B with an attached short bar

*** Refer to P.308, Specifications of Motor connector.**

In Case of 3-phase, G-frame, 200 V type

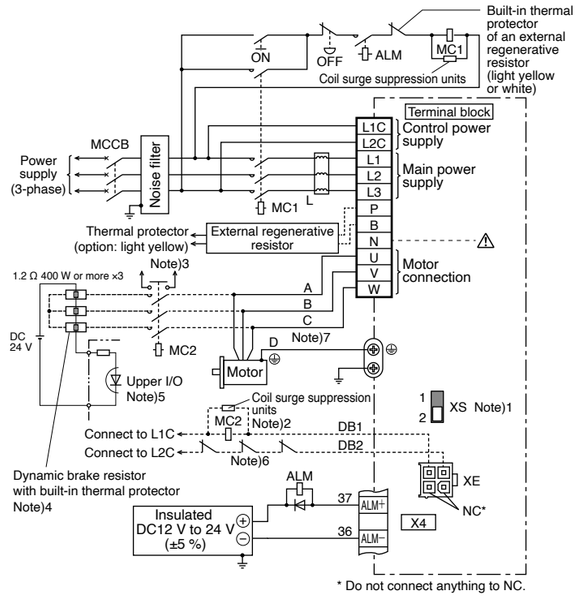

● The pin number of X4 is based on the factory setting parameters.

■ Connection of regenerative resistor

Frame No.	Short bar (Accessory)	Built-in regenerative resistor	Connection of terminal block ⚠ Do not connect anything to N.	
			In case of using an external regenerative resistor	In case of not using an external regenerative resistor
G-frame	without	without	• Connect an external regenerative resistor between P-B.	• Always open between P-B.

■ About the Dynamic Brake

G frame has built-in dynamic brake resistor.When using built-in dynamic brake, set switch XS to "1" side.
When exceeding the capacity of built-in dynamic brake resistor, set switch XS to "2" side and use external dynamic brake resistor.

■ When using external dynamic brake

Note 1) Set switch XS to "2" side.
Note 2) Make the electromagnetic contactor (MC2) the same as the electromagnetic contactor (MC1) of the main circuit.
Note 3) Provide an auxiliary contact, and configure protection so that the servo will not turn on in the external sequence if the main contact is welded.
Note 4) Mount the dynamic brake resistor on incombustible material such as metal.
Note 5) Install a thermal protector on the dynamic brake resistor and monitor it with the upper I / O, and configure protection so that the servo is not turned on in the external sequence when the thermal protector is operating.
Note 6) If the upper I / O cannot monitor the thermal protector, input the output of the thermal protector between L2C and DB2 so that the dynamic brake does not operate when the temperature protection works.

■ About motor wiring

Note 7) This is the terminal symbol of the connector.

* Power supply for motor brake and connector X4 requires insulation. Do not connect to the same power supply.

* Do not use built-in dynamic brake and external dynamic brake at the same time.

In Case of 3-phase, H-frame, 200 V type

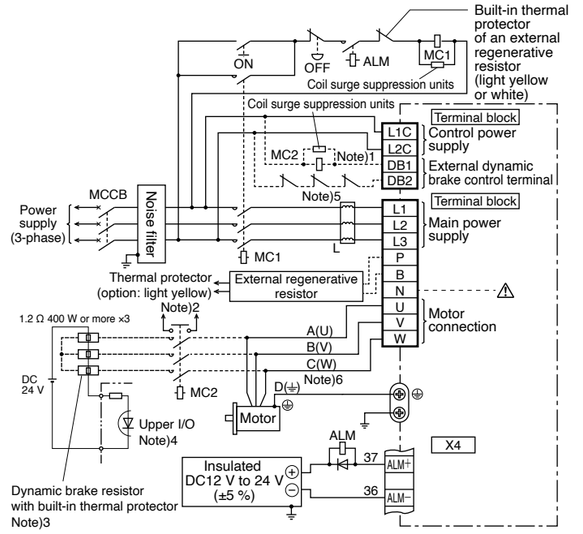

● The pin number of X4 is based on the factory setting parameters.

■ Connection of regenerative resistor

Frame No.	Short bar (Accessory)	Built-in regenerative resistor	Connection of terminal block ⚠ Do not connect anything to N.	
			In case of using an external regenerative resistor	In case of not using an external regenerative resistor
H-frame	without	without	• Connect an external regenerative resistor between P-B.	• Always open between P-B.

■ About the Dynamic Brake

The H frame does not have a built-in dynamic brake resistor, so it will be in a free run state when the motor does emergency stop.
Use an external dynamic brake resistor if it may cause a machine collision.

■ When using external dynamic brake

Note 1) Make the electromagnetic contactor (MC2) the same as the electromagnetic contactor (MC1) of the main circuit.
Note 2) Provide an auxiliary contact, and configure protection so that the servo will not turn on in the external sequence if the main contact is welded.
Note 3) Mount the dynamic brake resistor on incombustible material such as metal.
Note 4) Install a thermal protector on the dynamic brake resistor and monitor it with the upper I / O, and configure protection so that the servo is not turned on in the external sequence when the thermal protector is operating.
Note 5) If the upper I / O cannot monitor the thermal protector, input the output of the thermal protector between L2C and DB2 so that the dynamic brake does not operate when the temperature protection works.

■ About motor wiring

Note 6) This is the terminal symbol of the connector.
( ) Is the terminal symbol of 22.0 kW motor.

* Do not use built-in dynamic brake and external dynamic brake at the same time.

*** Refer to P.308, Specifications of Motor connector.**

Wiring to the Connector, X3 * Excluding A6SE, A6SG Series

Connecting the host controller can configure a safety circuit that controls the safety functions.

When not constructing the safety circuit, use the supplied safety bypass plug.

Outline Description of Safe Torque Off (STO)

The safe torque off (STO) function is a safety function that shuts the motor current and turns off motor output torque by forcibly turning off the driving signal of the servo driver internal power transistor. For this purpose, the STO uses safety input signal and hardware (circuit).

When STO function operates, the servo driver turns off the servo ready output signal (S-RDY) and enters STO state. When the driver becomes STO state, front panel displays the “St.”. Then, when the driver's state is STO input is off and servo-on input is off, the driver automatically becomes servo-off.

Safety Precautions

- When using the STO function, be sure to perform equipment risk assessment to ensure that the system conforms to the safety requirements.
- Even while the STO function is working, the following potential safety hazards exist. Check safety in risk assessment.
  - The motor may move when external force (e.g. gravity force on vertical axis) is exerted on it. Provide an external brake, etc., as necessary to secure the motor. Note that the purpose of motor with brake is holding and it cannot be used for braking application.
  - When parameter Pr5.10 Sequence at alarm is set to free run (disable dynamic brake), the motor is free run state and requires longer stop distance even if no external force is applied. Make sure that this does not cause any problem.
  - When power transistor, etc., becomes defective, the motor will move to the extent equivalent of 180 electrical angle (max.). Make sure that this does not cause any problem.
  - The STO turns off the current to the motor but does not turn off power to the servo driver and does not isolate it. When starting maintenance service on the servo driver, turn off the driver by using a different disconnecting device.
- External device monitor (EDM) output signal is not a safety signal. Do not use it for an application other than failure monitoring.
- Dynamic brake and external brake release signal output are not related to safety function. When designing the system, make sure that the failure of external brake release during STO condition does not result in danger condition.
- When using STO function, connect equipment conforming to the safety standards.

[Connector pin assignment]
(Viewed from cable)

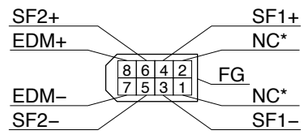

* Do not connect anything to NC.

▪ System configuration

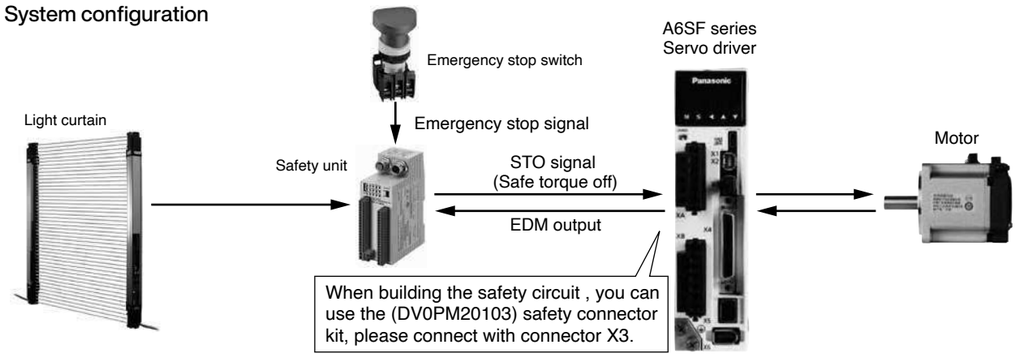

Wiring Example of Position Control Mode

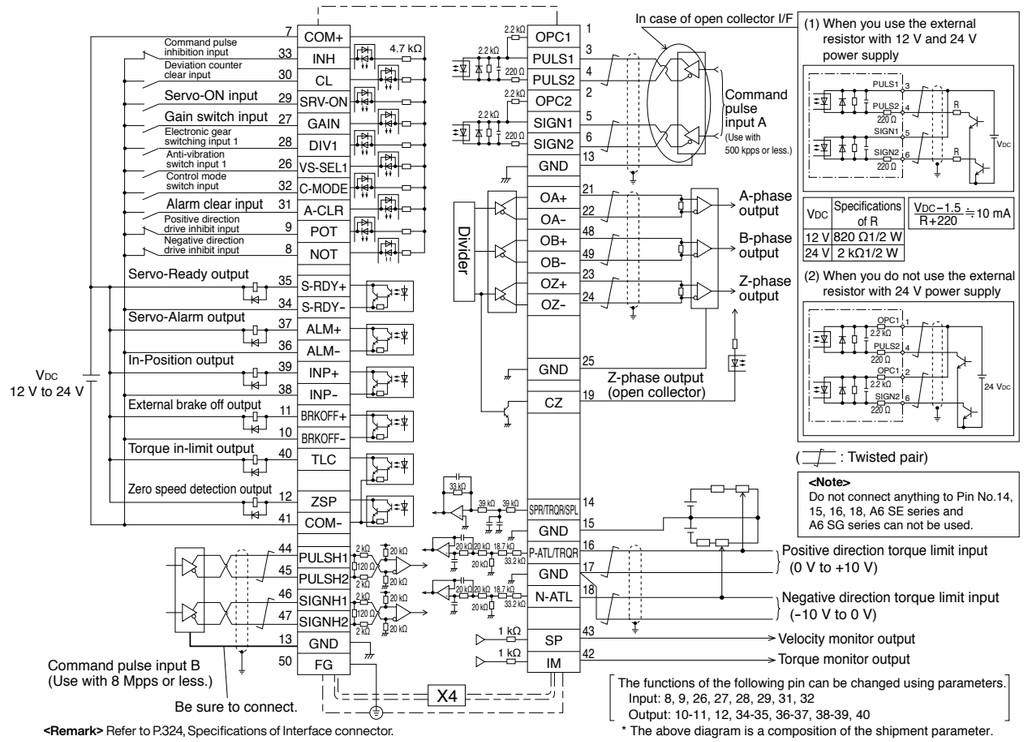

<Remark> Refer to P.324, Specifications of Interface connector.

Wiring Example of Velocity Control Mode

* Internal velocity command is available only for A6SE and A6SG series

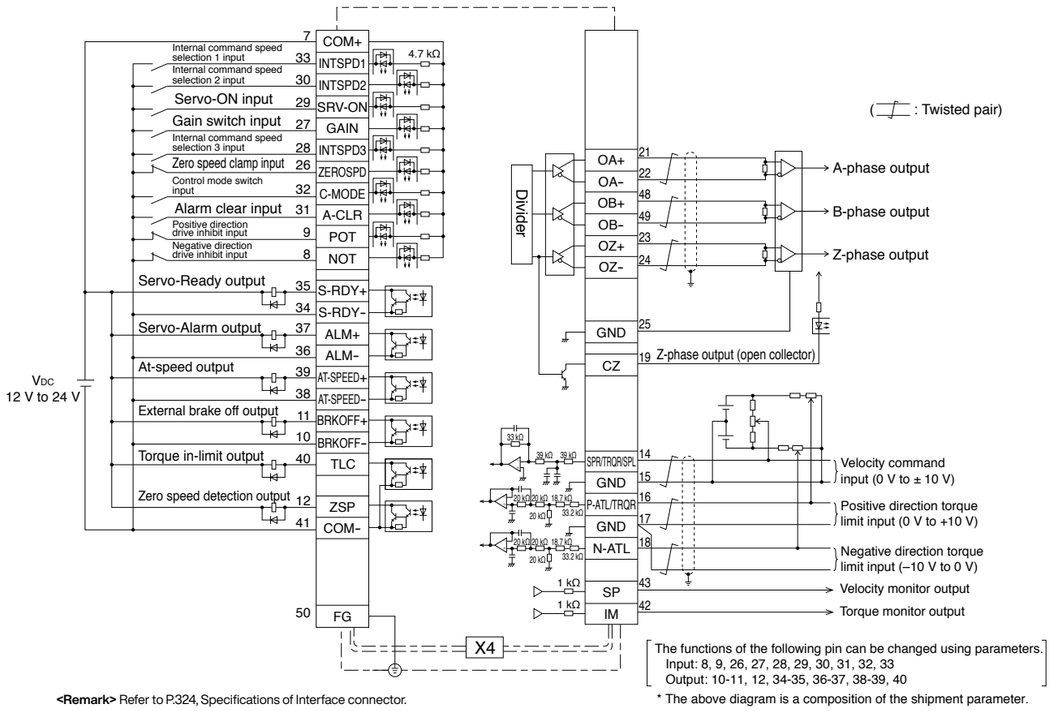

<Remark> Refer to P.324, Specifications of Interface connector.

Wiring to the Connector, X4

Wiring Example of Torque Control Mode

* Excluding A6SE, A6SG Series

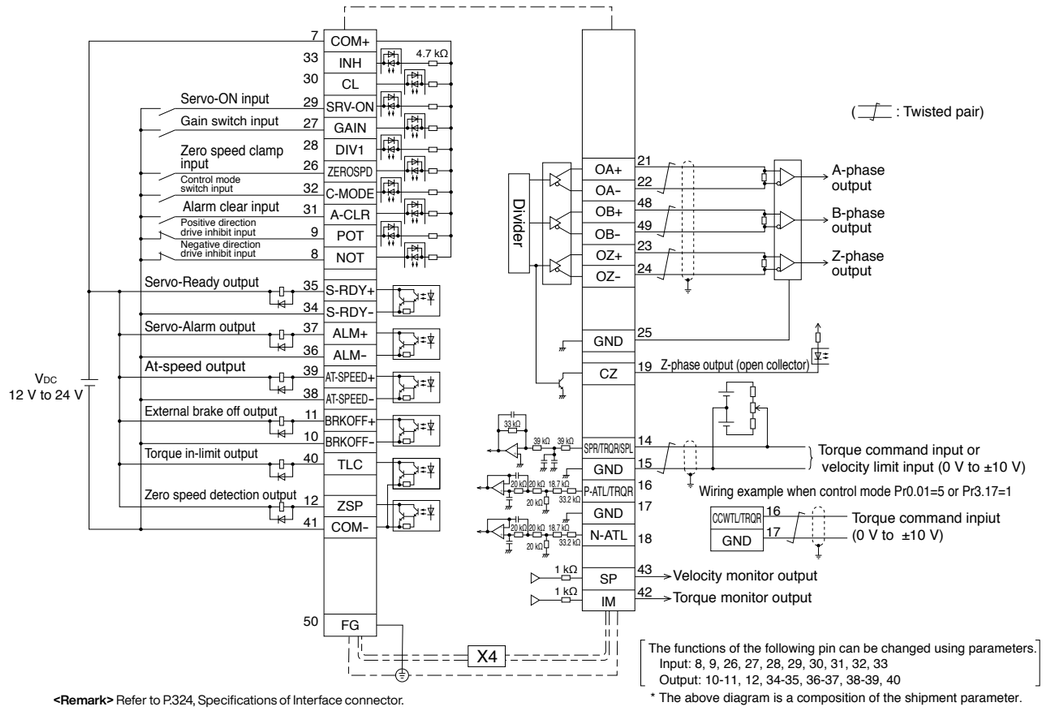

<Remark> Refer to P.324, Specifications of Interface connector.

Wiring Example of Full-closed Control Mode

* Excluding A6SE, A6SG Series

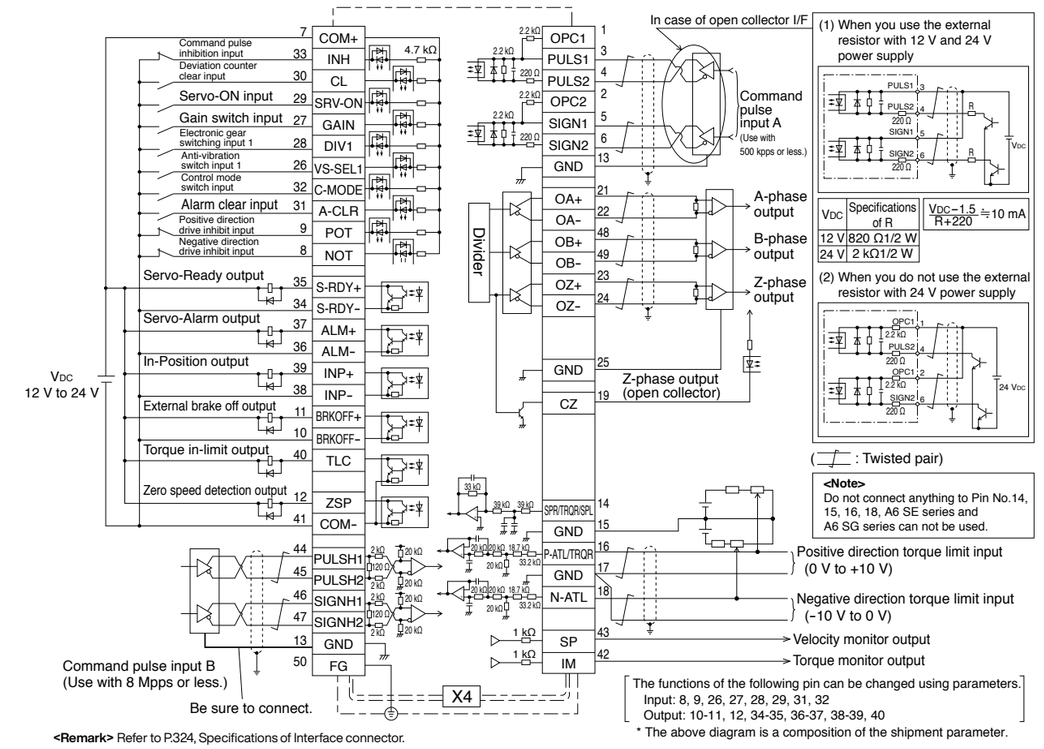

<Remark> Refer to P.324, Specifications of Interface connector.

Wiring to the Connector, X5

* Excluding A6SE, A6SG Series

Applicable External Scale

Scale Type	Partner	Series	Resolution*1 [μm]	Max. rate*1 [m/s]
Parallel Type (A/B/Z phase)	General	—	Maximum speed after4× multiplication : 4 Mpps	
Serial communication (Incremental)	Magnescale Co., Ltd.	SL700-PL101RP/RHP SL710-PL101RP/RHP	0.1	10
		SR75/SR85	0.01 to 1	3.3
		BF1	0.001/0.01	0.4/1.8
		SQ10	0.05/0.1/0.5/1	3
	NIDEC MACHINE TOOL CORPORATION	MPLIN	0.1	30
	Nidec Sankyo Corporation	PSLH041+PSLG	0.1	6
Serial communication (Absolute)	FAGOR AUTOMATION	S3BP/G3BP	0.01/0.05	3
		LAP	0.01/0.05	3
		EXA/ EXG/ EXT	0.01/0.05	8
		H2AP-D200/H2AP-D90	29 bit/23 bit	750 r/min/1500 r/min
		S2AP-D90	23 bit	1500 rpm
	HEIDENHAIN	LIC 2197P/LIC 2199P	0.05/0.1	10
		LIC 4193P/LIC 4195P LIC 4197P/LIC 4199P	0.001/0.005/0.01	10
		LC 195P/LC 495P	0.001/0.01	3
		ECA 4490P	27 bits to 29 bits	7000 r/min～550 r/min (Depends on drum size)
		RCN 2x90P/RCN 5x90P	26 bits/28 bits	1500 r/min
		RCN 8x90P	29 bit	500 r/min
	Magnescale Co.,Ltd.	SR77/SR87	0.01 to 1	3.3
	Mitutoyo Corporation	AT573-SC/H	0.05	2.5
		ST700	0.1	5
		ST1300	0.001/0.01	8
	NIDEC MACHINE TOOL CORPORATION	MPZA/MPRZ	23 bits	10000 r/min, 5000 r/min
	Renishaw plc	RESOLUTE	0.001	4
			0.05	100
			0.1	100
	RSF Electronik	MC 15P MP/MC 15P MK	0.05/0.1	10
		MCR 15P	22 bits～25 bits	—

*1 The maximum speed is a characteristic of the driver. It is limited by the configration of the machine and the system.

* For more information about the external scale product, please contact the manufacturer.

Wiring Diagram of X5

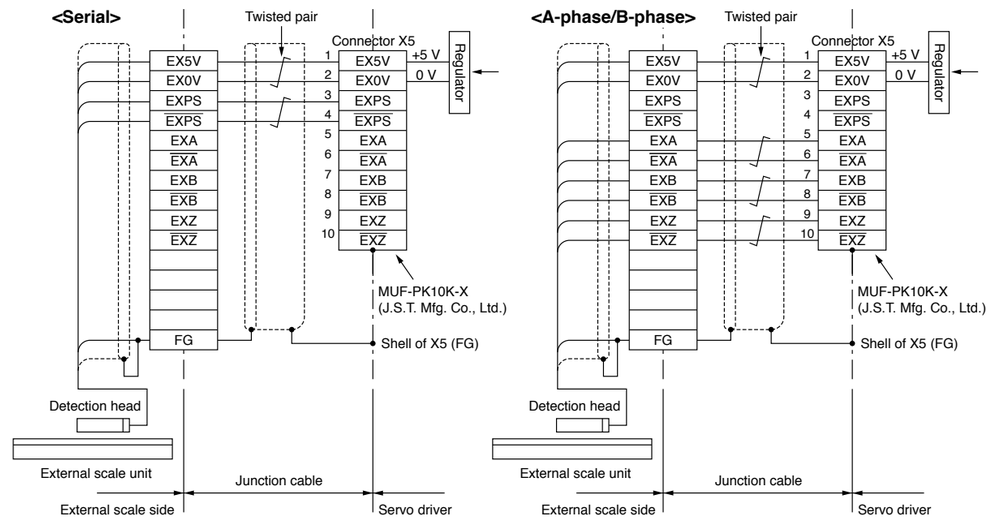

When using a 23-bit absolute encoder as an absolute system*.

* When use a multi-turn data.

●MSMF 50 W to 1000 W ●MHMF 50 W to 1000 W ●MQMF 100 W to 400 W <Leadwire type>

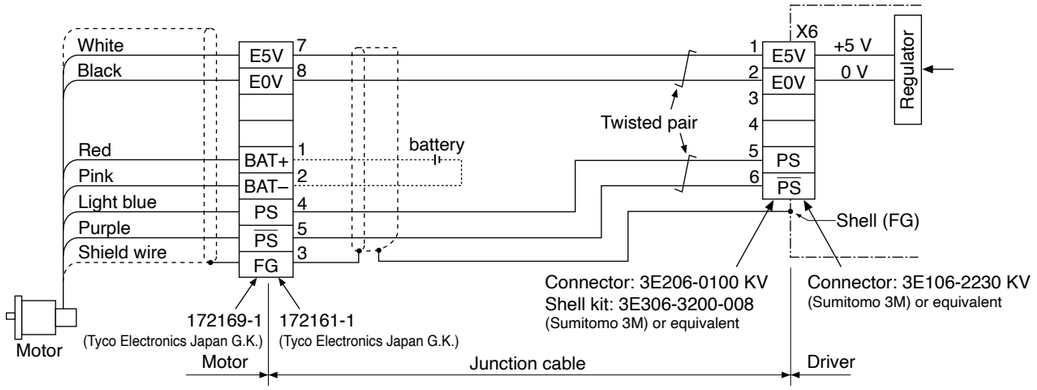

●MSMF 50 W to 1000 W ●MHMF 50 W to 1000 W ●MQMF 100 W to 400 W <Connector type>

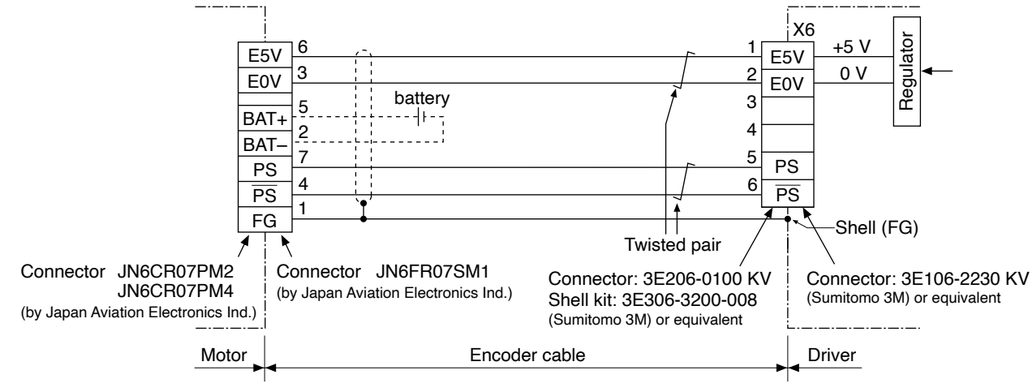

<Caution>

- Tighten the motor connector mounting screw (M2) with a torque between 0.19 N·m and 0.21 N·m. To avoid damage, be sure to use only the screw supplied with the connector.
- Do not remove the gasket supplied with the junction cable connector. Securely install the gasket in place. Otherwise, the degree of protection of IP67 will not be guaranteed.

[Connector pin assignment (Motor side)]



(Viewed from cable)

●MSMF 1.0 kW to 5.0 kW ●MHMF 1.0 kW to 5.0 kW
●MDMF 1.0 kW to 5.0 kW ●MGMF 0.85 kW to 4.4 kW

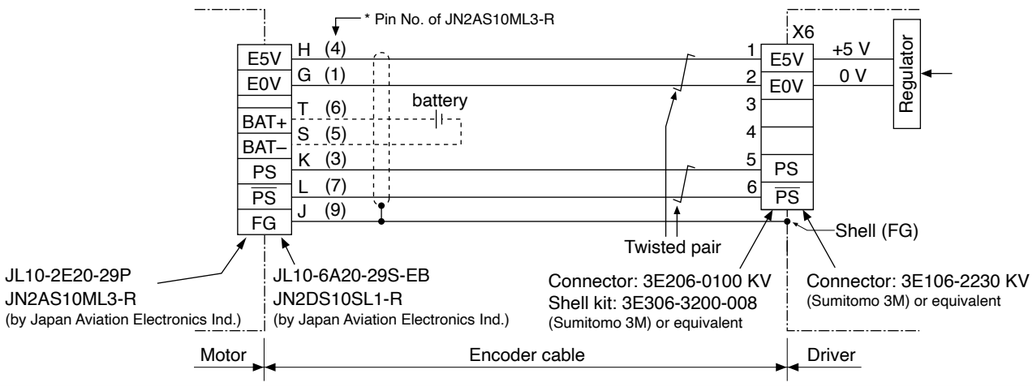

[Connector pin assignment] Refer to P.307, P.308 “Specifications of Motor connector”.

When using a 23-bit absolute encoder as a incremental system*.

* When do not use a multi-turn data.

●MSMF 50 W to 1000 W ●MHMF 50 W to 1000 W ●MQMF 100 W to 400 W <Leadwire type>

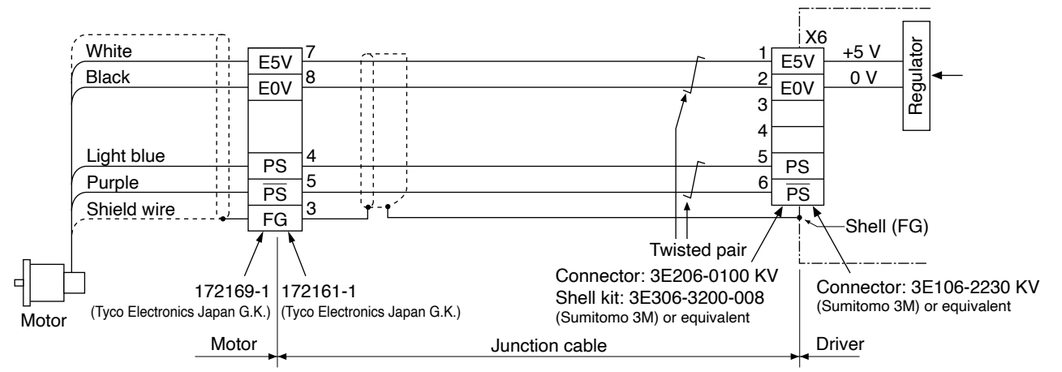

●MSMF 50 W to 1000 W ●MHMF 50 W to 1000 W ●MQMF 100 W to 400 W <Connector type>

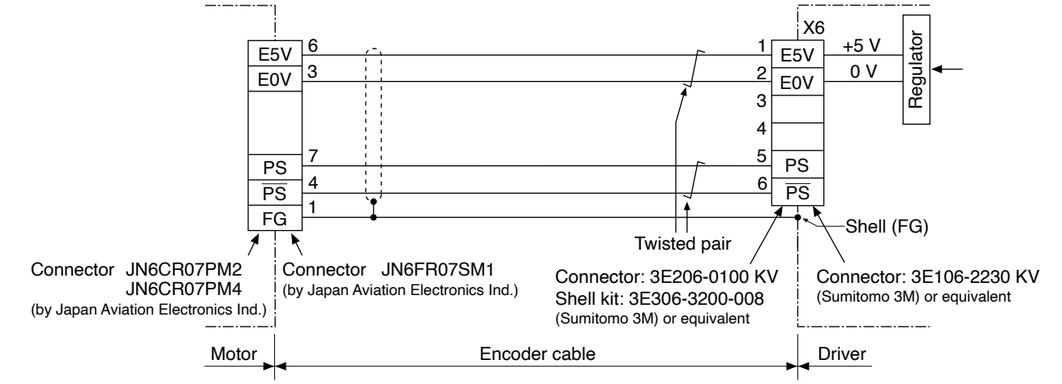

<Caution>

- Tighten the motor connector mounting screw (M2) with a torque between 0.19 N·m and 0.21 N·m. To avoid damage, be sure to use only the screw supplied with the connector.
- Do not remove the gasket supplied with the junction cable connector. Securely install the gasket in place. Otherwise, the degree of protection of IP67 will not be guaranteed.

[Connector pin assignment (Motor side)]



(Viewed from cable)

●MSMF 1.0 kW to 5.0 kW ●MHMF 1.0 kW to 5.0 kW
●MDMF 1.0 kW to 5.0 kW ●MGMF 0.85 kW to 4.4 kW

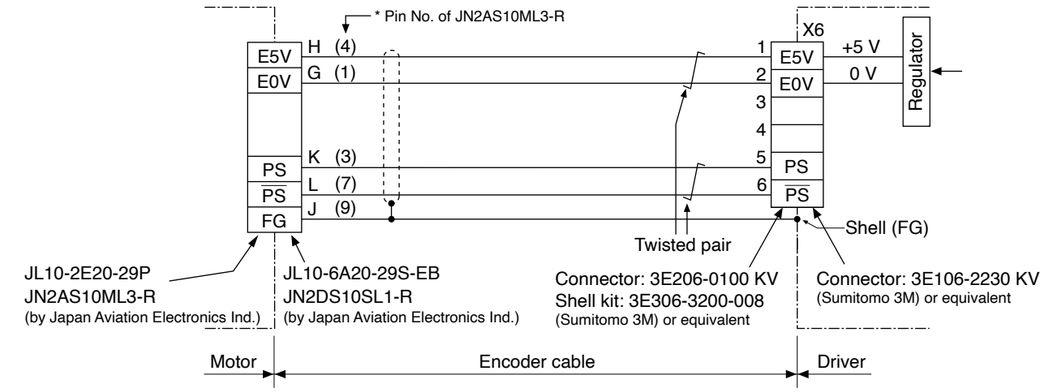

[Connector pin assignment] Refer to P.307, P.308 “Specifications of Motor connector”.

* All dimensions shown in this catalog are for A6SF series. But external dimensions are also same for A6SE and A6SG series. For external appearance, please refer to P.23 and P.24.

A-frame

Unit [mm]

X1: USB connector
X2: RS232/485 communication connector
X3: Safety function connector
X4: Interface connector
X5: For external scale connection
X6: For encoder connection

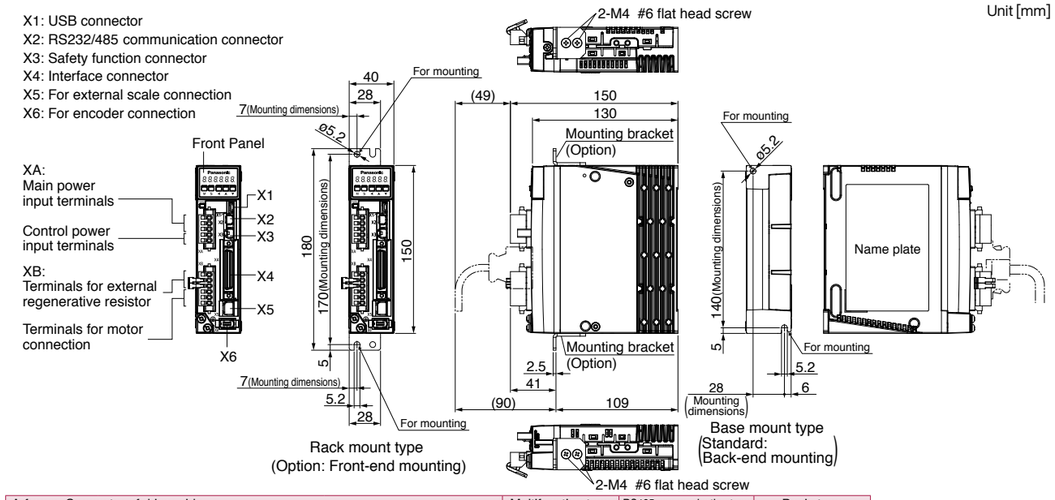

A-frame: Connector of driver side			Multifunction type	RS485 communication type	Basic type
Connector XA	S05B-F32SK-GGXR	J.S.T. Mfg. Co., Ltd.	●	●	●
Connector XB	S06B-F32SK-GGXR	J.S.T. Mfg. Co., Ltd.	●	●	●
Connector X1	UB-M5BR-DMP14-4S (or equivalent)	J.S.T. Mfg. Co., Ltd.	●	●	●
Connector X2	1-2040537-1 (or equivalent)	Tyco Electronics Japan G.K.	●	●	—
Connector X3	2040537-1 (or equivalent)	Tyco Electronics Japan G.K.	●	—	—
Connector X4	10250-52A2PE (or equivalent)	Sumitomo 3M	●	●	●
Connector X5	MUF-RS10DK-GKXR (or equivalent)	J.S.T. Mfg. Co., Ltd.	●	—	—
Connector X6	3E106-2230 KV (or equivalent)	Sumitomo 3M	●	●	●

<Attached to the driver>

Connector of power and motor side			Multifunction type	RS485 communication type	Basic type
Connector XA	05JFAT-SAX-GGKK-A	J.S.T. Mfg. Co., Ltd.	●	●	●
Connector XB	06JFAT-SAX-GGKK-A	J.S.T. Mfg. Co., Ltd.	●	●	●

Mass: 0.8 kg

B-frame

Unit [mm]

XA: ① Main power input terminals
② Control power input terminals
XB: ① Terminals for external regenerative resistor
② Terminals for motor connection

X1: USB connector
X2: RS232/485 communication connector
X3: Safety function connector
X4: Interface connector
X5: For external scale connection
X6: For encoder connection

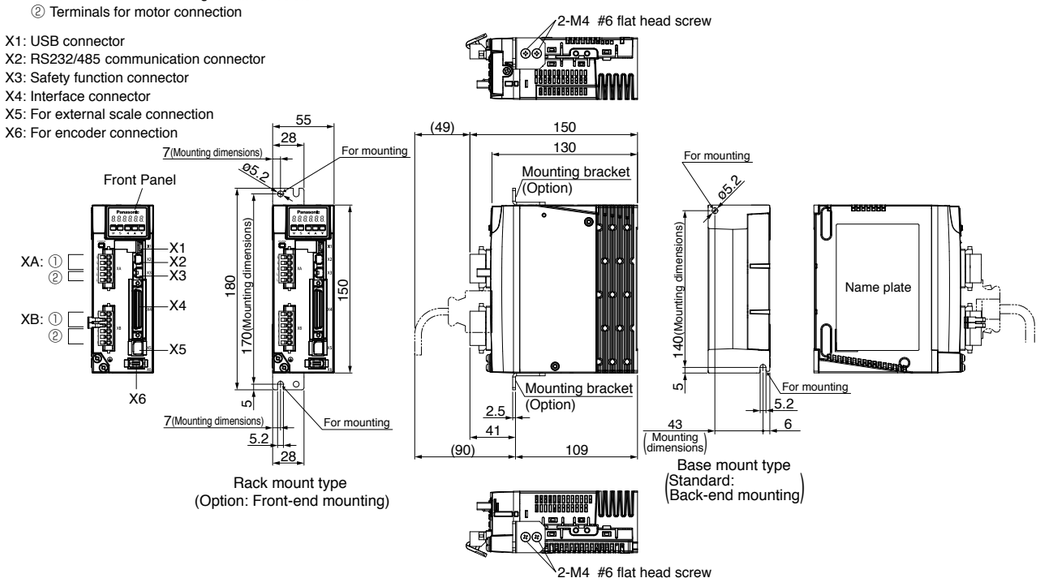

* For connectors used to connect to the driver, power supply and motor, refer to the A-frame table because both frames use the same connectors.

Mass: 1.0 kg

C-frame

Unit [mm]

XA: ① Main power input terminals
② Control power input terminals
XB: ① Terminals for external regenerative resistor
② Terminals for motor connection

X1: USB connector
X2: RS232/485 communication connector
X3: Safety function connector
X4: Interface connector
X5: For external scale connection
X6: For encoder connection

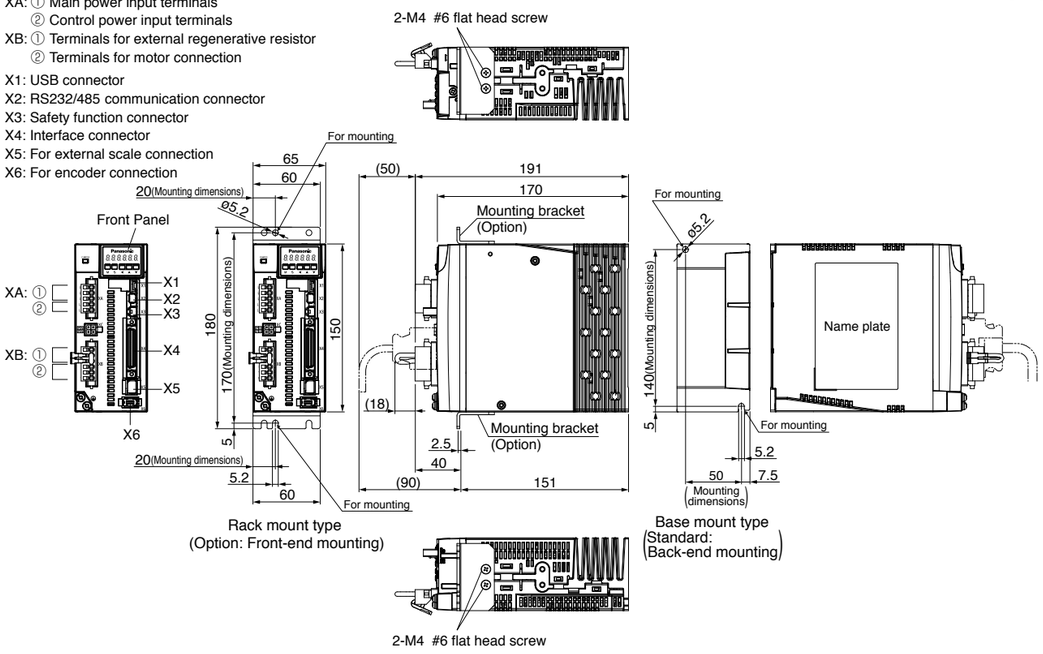

* For connectors used to connect to the driver, power supply and motor, refer to the A-frame table because both frames use the same connectors.

Mass: 1.6 kg

D-frame (200 V)

Unit [mm]

XA: ① Main power input terminals
② Control power input terminals
XB: ① Terminals for external regenerative resistor
② Terminals for motor connection

X1: USB connector
X2: RS232/485 communication connector
X3: Safety function connector
X4: Interface connector
X5: For external scale connection
X6: For encoder connection

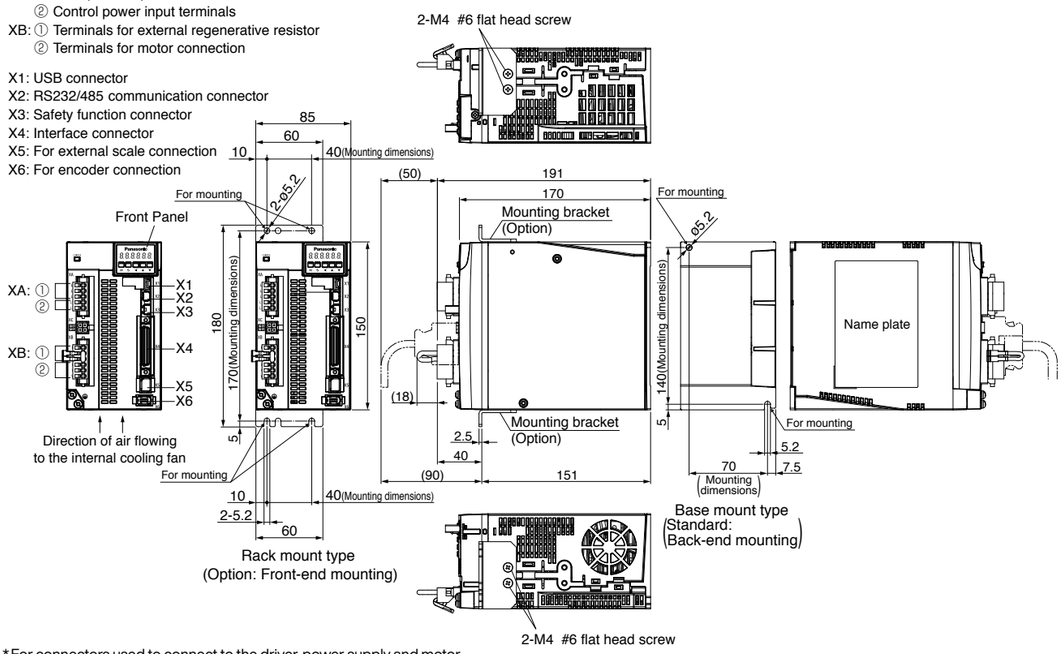

* For connectors used to connect to the driver, power supply and motor, refer to the A-frame table because both frames use the same connectors.

Mass: 2.1 kg

* All dimensions shown in this catalog are for A6SF series. But external dimensions are also same for A6SE and A6SG series. For external appearance, please refer to P.23 and P.24.

E-frame (200 V)

Unit [mm]

X1: USB connector
X2: RS232/485 communication connector
X3: Safety function connector
X4: Interface connector
X5: For external scale connection
X6: For encoder connection

XA: ① Main power input terminals
② Control power input terminals
XB: Terminals for motor connection
XC: Terminals for external regenerative resistor

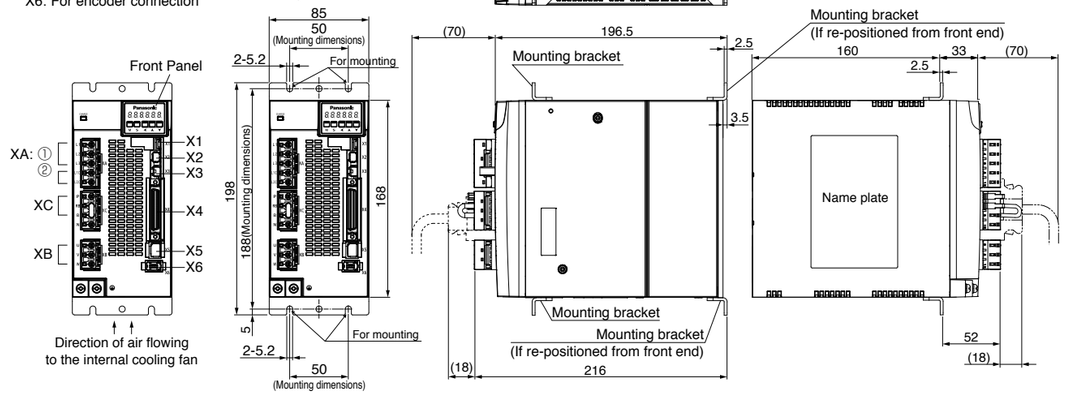

E-frame: Connector of driver side		
Connector XA	S05B-JTSLSK-GSANXR	J.S.T. Mfg. Co., Ltd.
Connector XB	S03B-JTSLSK-GSANXR	J.S.T. Mfg. Co., Ltd.
Connector XC	S04B-JTSLSS-GSANXR	J.S.T. Mfg. Co., Ltd.

<Attached to the driver>

E-frame: Connector of power and motor side		
Connector XA	05JFAT-SAXGSA-L	J.S.T. Mfg. Co., Ltd.
Connector XB	03JFAT-SAXGSA-L	J.S.T. Mfg. Co., Ltd.
Connector XC	04JFAT-SAXGSA-L	J.S.T. Mfg. Co., Ltd.

* For connectors X1 to X6, refer to the list provided in the A-frame table because both frames use the same connectors.

Mass: 2.7 kg

F-frame (200 V)

Unit [mm]

X1: USB connector
X2: RS232/485 communication connector
X3: Safety function connector
X4: Interface connector
X5: For external scale connection
X6: For encoder connection

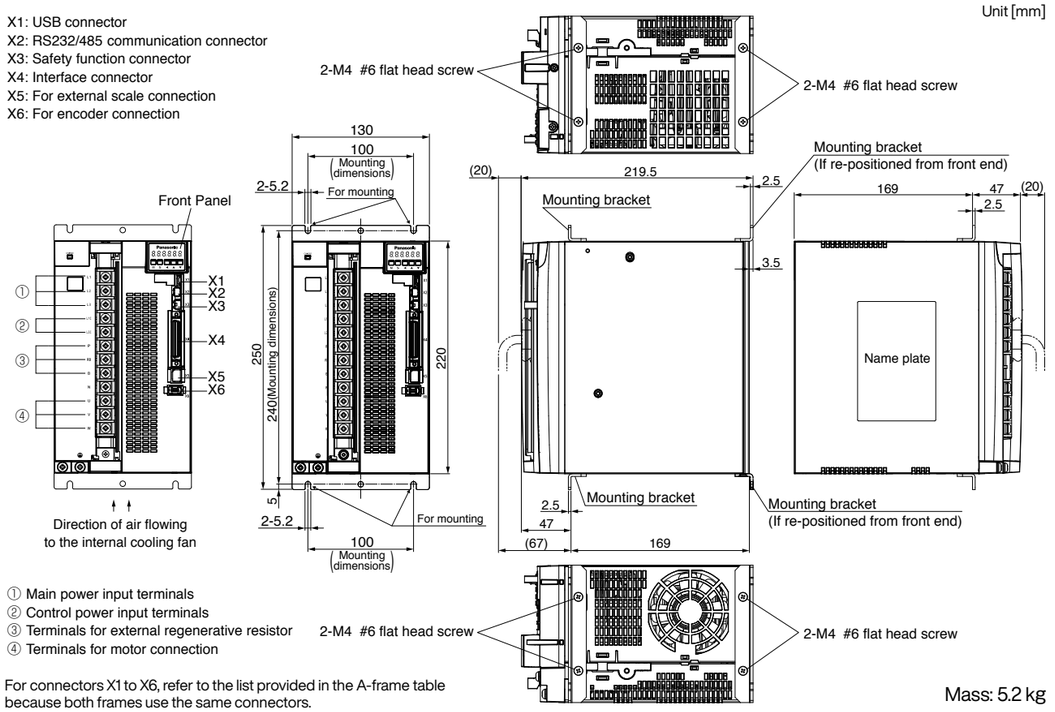

① Main power input terminals
② Control power input terminals
③ Terminals for external regenerative resistor
④ Terminals for motor connection

* For connectors X1 to X6, refer to the list provided in the A-frame table because both frames use the same connectors.

Mass: 5.2 kg

G-frame (200 V) (The lineup of A6SE and A6SG series is not available.)

Unit [mm]

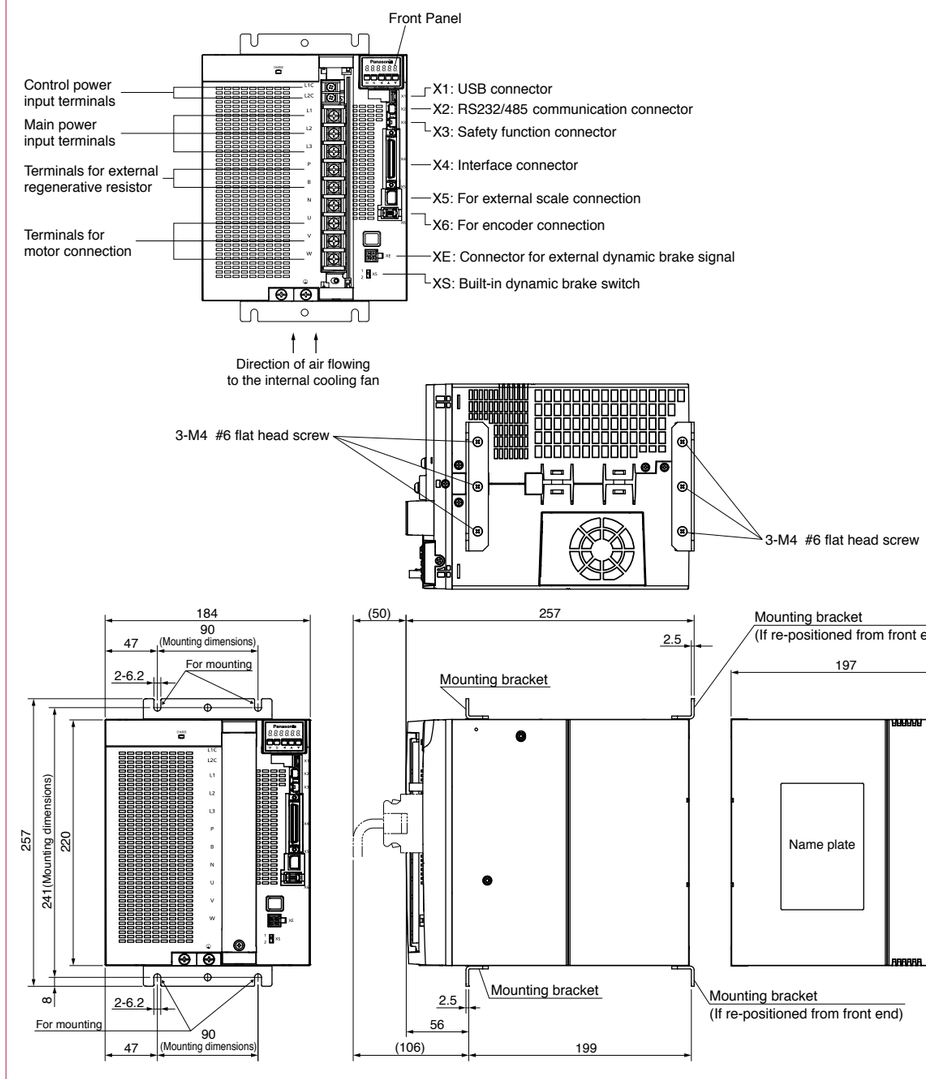

Connector of driver side	Controlor side (customer prepares)
Connector XE : 5569-04A2-210 (MOLEX)	Connector : 5557-04R-210 (MOLEX) Pin : 5556PBTL

* For connectors X1 to X6, refer to the list provided in the A-frame table because both frames use the same connectors.

Mass: 8.2 kg

H-frame (200 V) (The lineup of A6SE and A6SG series is not available.)

Unit [mm]

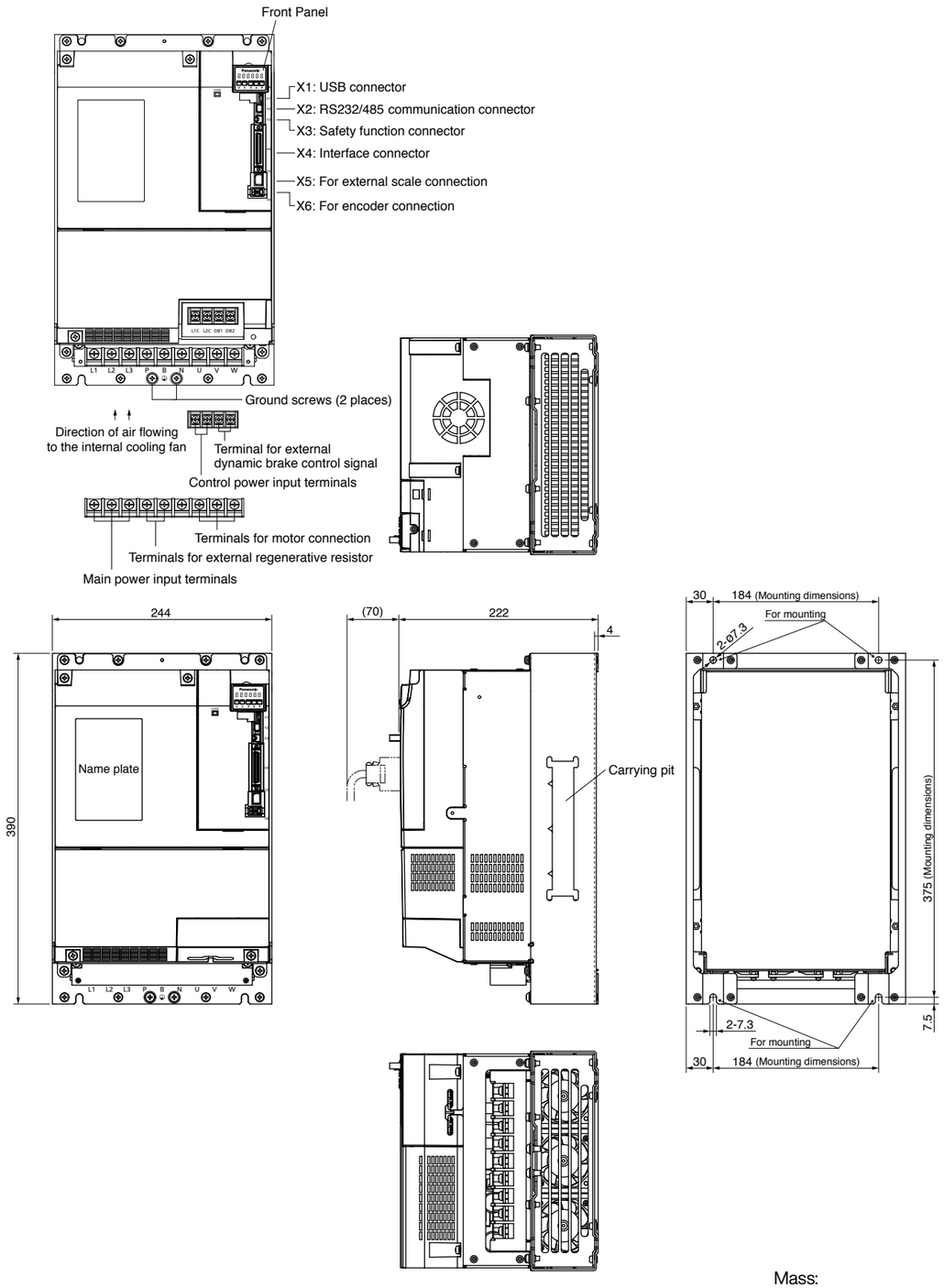

Mass:
MHDLTE3SF/ 14.2 kg
MHDLTF3SF/ 15.2 kg

* For connectors X1 to X6, refer to the list provided in the A-frame table because both frames use the same connectors.

Features

- Line-up IP67 motor: 50 W to 5.0 kW
- Max speed: 6500r/min (MHMF 50 W to 400 W)
- Low inertia (MSMF) to High inertia (MHMF).
- Low cogging torque: Rated torque ratio 0.5 % (typical value).
- 23-bit absolute encoder (8388608 pulse).

Motor Lineup

80 mm sq. or less



MSMF
Low inertia

Max. speed : 6000 r/min
Rated speed : 3000 r/min
Rated output :
50 W to 1000 W
Enclosure:
IP65: Leadwire type
IP67: Connector type



MQMF
(Flat type)
Middle inertia

Max. speed : 6500 r/min
Rated speed : 3000 r/min
Rated output :
100 W to 400 W
Enclosure:
IP65: Leadwire type
IP67: Connector type



MHMF
High inertia

Max. speed :
6500 r/min
6000 r/min (750 W,1000 W)
Rated speed : 3000 r/min
Rated output :
50 W to 1000 W
Enclosure:
IP65: Leadwire type
IP67: Connector type

100 mm sq. or more



MSMF
Low inertia

Max. speed : 5000 r/min
4500 r/min (4.0 kW,5.0 kW)
Rated speed : 3000 r/min
Rated output : 1.0 kW to 5.0 kW
Enclosure : IP67



MDMF
Middle inertia

Max. speed : 3000 r/min
: 2000 r/min (11.0 kW to 22.0 kW)
Rated speed : 2000 r/min
: 1500 r/min (11.0 kW to 22.0 kW)
Rated output : 1.0 kW to 22.0 kW
Enclosure : IP67, IP44 (22.0 kW)



MGMF
(Low speed/ High torque type)
Middle inertia

Max. speed : 3000 r/min
Rated speed : 1500 r/min
Rated output : 0.85 kW to 5.5 kW
Enclosure : IP67



MHMF
High inertia

Max. speed : 3000 r/min
Rated speed : 2000 r/min
: 1500 r/min (7.5 kW)
Rated output : 1.0 kW to 7.5 kW
Enclosure : IP67

Motor Contents

MSMF
50 W to 5.0 kW P.63

MQMF
100 W to 400 W P.79

MHMF
50 W to 7.5 kW P.85

MDMF
1.0 kW to 22.0 kW P.102

MGMF
0.85 kW to 5.5 kW P.112

Dimensions
MSMF
(50 W to 1000 W) P.119
MSMF
(1.0 kW to 5.0 kW) P.127
MQMF
(100 W to 400 W) P.135
MHMF
(50 W to 1000 W) P.147
MHMF
(1.0 kW to 7.5 kW) P.171
MDMF
(1.0 kW to 22.0 kW) P.180
MGMF
(0.85 kW to 5.5 kW) P.193

Special Order Product P.203

Motors with Gear Reducer P.293

Motor Specification Description
Environmental Conditions P.303
Notes on [Motor specification] page P.303
Permissible Load at Output Shaft P.304
Built-in Holding Brake P.305

100 V MSMF 50 W [Low inertia 38 mm sq.] IP65

Specifications

			AC100 V
Motor model *1			MSMF5AZL1□□
Applicable driver	Model No.	Multifunction type	MADLT01SF
		RS485 communication type *2	MADLN01SG
		Basic type *2	MADLN01SE
	Frame symbol		A-frame
Power supply capacity		(kVA)	0.4
Rated output		(W)	50
Rated torque		(N·m)	0.16
Continuous stall torque		(N·m)	0.16
Momentary Max. peak torque		(N·m)	0.48
Rated current		(A(rms))	1.1
Max. current		(A(o-p))	4.7
Regenerative brake frequency (times/min) Note)1	Without option		No limit Note)2
	DV0P4280		No limit Note)2
Rated rotational speed		(r/min)	3000
Max. rotational speed		(r/min)	6000
Moment of inertia of rotor ($\times 10^{-4}$ kg·m^2)	Without brake		0.026
	With brake		0.029
Recommended moment of inertia ratio of the load and the rotor Note)3			30 times or less
Rotary encoder specifications *3			23-bit Absolute
	Resolution per single turn		8388608

- **Brake specifications** (For details, refer to P.305)

(This brake will be released when it is energized. Do not use this for braking the motor in motion.)

Static friction torque (N·m)	0.294 or more
Engaging time (ms)	35 or less
Releasing time (ms) Note)4	20 or less
Exciting current (DC) (A)	0.30
Releasing voltage (DC) (V)	1 or more
Exciting voltage (DC) (V)	24±1.2

- **Permissible load** (For details, refer to P.304)

During assembly	Radial load P-direction (N)	147
	Thrust load A-direction (N)	88.0
	Thrust load B-direction (N)	117.6
During operation	Radial load P-direction (N)	68.6
	Thrust load A, B-direction (N)	58.8

- For details of Note)1 to Note)4, refer to P.303.
- Dimensions of Driver, refer to P.57.

*1 □□ in the motor part number represents the motor specifications.

*2 Basic type and RS485 communication type are "Position control type". Detail of model designation, refer to P.22.

*3 When using a rotary encoder as an incremental system (not using multi-turn data), do not connect a battery for absolute encoder.

Torque characteristics (at AC100 V of power voltage <Dotted line represents the torque at 10 % less supply voltage.>)

Without oil seal

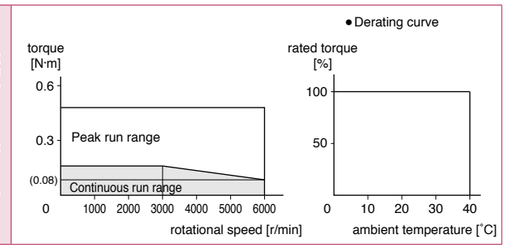

With oil seal

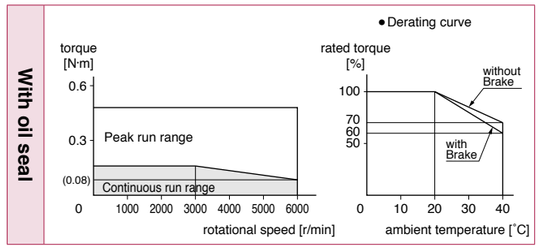

Dimensions

Motor specifications	Round shaft/ Key way, center tap shaft					
	without brake			with brake		
	without oil seal	with oil seal	with protective lip/ with oil seal	without oil seal	with oil seal	with protective lip/ with oil seal
Leadwire type (IP65)	P.119		—	P.119		—
Connector type (IP67)	P.119		—	P.120		—

<Cautions> Reduce the moment of inertia ratio if high speed response operation is required.
Dimensions are subject to change without notice. Contact us or a dealer for the latest information.
Read the Instruction Manual carefully and understand all precautions and remarks before using the products.

Specifications

			AC200 V
Motor model *1			MSMF5AZL1□□
Applicable driver	Model No.	Multifunction type	MADLT05SF
		RS485 communication type *2	MADLN05SG
		Basic type *2	MADLN05SE
	Frame symbol		A-frame
Power supply capacity		(kVA)	0.5
Rated output		(W)	50
Rated torque		(N·m)	0.16
Continuous stall torque		(N·m)	0.16
Momentary Max. peak torque		(N·m)	0.48
Rated current		(A(rms))	1.1
Max. current		(A(o-p))	4.7
Regenerative brake frequency (times/min) Note)1	Without option		No limit Note)2
	DV0P4281		No limit Note)2
Rated rotational speed		(r/min)	3000
Max. rotational speed		(r/min)	6000
Moment of inertia of rotor ($\times 10^{-4}$ kg·m^2)	Without brake		0.026
	With brake		0.029
Recommended moment of inertia ratio of the load and the rotor Note)3			30 times or less
Rotary encoder specifications *3			23-bit Absolute
	Resolution per single turn		8388608

- **Brake specifications** (For details, refer to P.305)

(This brake will be released when it is energized. Do not use this for braking the motor in motion.)

Static friction torque (N·m)	0.294 or more
Engaging time (ms)	35 or less
Releasing time (ms) Note)4	20 or less
Exciting current (DC) (A)	0.30
Releasing voltage (DC) (V)	1 or more
Exciting voltage (DC) (V)	24±1.2

- **Permissible load** (For details, refer to P.304)

During assembly	Radial load P-direction (N)	147
	Thrust load A-direction (N)	88.0
	Thrust load B-direction (N)	117.6
During operation	Radial load P-direction (N)	68.6
	Thrust load A, B-direction (N)	58.8

- For details of Note)1 to Note)4, refer to P.303.
- Dimensions of Driver, refer to P.57.

*1 □□ in the motor part number represents the motor specifications.

*2 Basic type and RS485 communication type are "Position control type". Detail of model designation, refer to P.22.

*3 When using a rotary encoder as an incremental system (not using multi-turn data), do not connect a battery for absolute encoder.

Torque characteristics (at AC200 V of power voltage <Dotted line represents the torque at 10 % less supply voltage.>)

Without oil seal

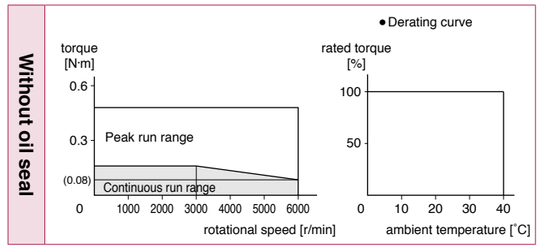

With oil seal

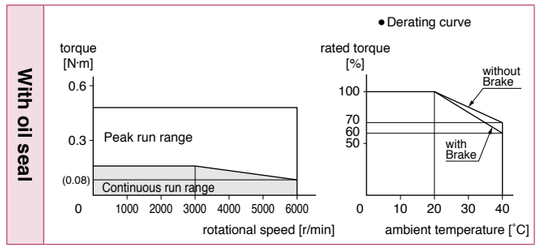

Dimensions

Motor specifications	Round shaft/ Key way, center tap shaft					
	without brake			with brake		
	without oil seal	with oil seal	with protective lip/ with oil seal	without oil seal	with oil seal	with protective lip/ with oil seal
Leadwire type (IP65)	P.119		—	P.119		—
Connector type (IP67)	P.119		—	P.120		—

<Cautions> Reduce the moment of inertia ratio if high speed response operation is required.
Dimensions are subject to change without notice. Contact us or a dealer for the latest information.
Read the Instruction Manual carefully and understand all precautions and remarks before using the products.

100 V MSMF 100 W [Low inertia 38 mm sq.] IP65

Specifications

			AC100 V
Motor model *1			MSMF011L1□□
Applicable driver	Model No.	Multifunction type	MADLT11SF
		RS485 communication type *2	MADLN11SG
		Basic type *2	MADLN11SE
	Frame symbol		A-frame
Power supply capacity		(kVA)	0.4
Rated output		(W)	100
Rated torque		(N·m)	0.32
Continuous stall torque		(N·m)	0.32
Momentary Max. peak torque		(N·m)	0.95
Rated current		(A(rms))	1.6
Max. current		(A(o-p))	6.9
Regenerative brake frequency (times/min) Note)1	Without option		No limit Note)2
	DV0P4280		No limit Note)2
Rated rotational speed		(r/min)	3000
Max. rotational speed		(r/min)	6000
Moment of inertia of rotor ($\times 10^{-4}$ kg·m^2)	Without brake		0.048
	With brake		0.051
Recommended moment of inertia ratio of the load and the rotor Note)3			30 times or less
Rotary encoder specifications *3			23-bit Absolute
	Resolution per single turn		8388608

- **Brake specifications** (For details, refer to P.305)

(This brake will be released when it is energized. Do not use this for braking the motor in motion.)

Static friction torque (N·m)	0.294 or more
Engaging time (ms)	35 or less
Releasing time (ms) Note)4	20 or less
Exciting current (DC) (A)	0.30
Releasing voltage (DC) (V)	1 or more
Exciting voltage (DC) (V)	24±1.2

- **Permissible load** (For details, refer to P.304)

During assembly	Radial load P-direction (N)	147
	Thrust load A-direction (N)	88.0
	Thrust load B-direction (N)	117.6
During operation	Radial load P-direction (N)	68.6
	Thrust load A, B-direction (N)	58.8

- For details of Note)1 to Note)4, refer to P.303.
- Dimensions of Driver, refer to P.57.

*1 □□ in the motor part number represents the motor specifications.

*2 Basic type and RS485 communication type are "Position control type". Detail of model designation, refer to P.22.

*3 When using a rotary encoder as an incremental system (not using multi-turn data), do not connect a battery for absolute encoder.

Torque characteristics (at AC100 V of power voltage <Dotted line represents the torque at 10 % less supply voltage.>)

Without oil seal

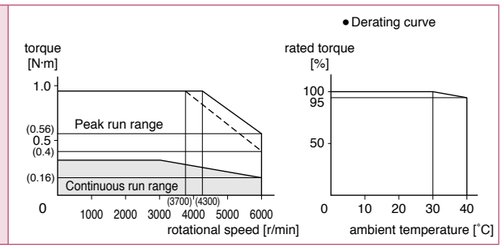

With oil seal

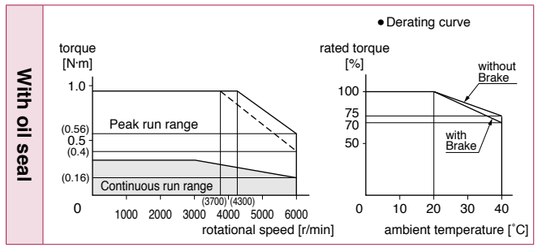

Dimensions

Motor specifications	Round shaft/ Key way, center tap shaft					
	without brake			with brake		
	without oil seal	with oil seal	with protective lip/ with oil seal	without oil seal	with oil seal	with protective lip/ with oil seal
Leadwire type (IP65)	P.120		—	P.120		—
Connector type (IP67)	P.121		—	P.121		—

<Cautions> Reduce the moment of inertia ratio if high speed response operation is required.
Dimensions are subject to change without notice. Contact us or a dealer for the latest information.
Read the Instruction Manual carefully and understand all precautions and remarks before using the products.

Specifications

			AC200 V
Motor model *1			MSMF012L1□□
Applicable driver	Model No.	Multifunction type	MADLT05SF
		RS485 communication type *2	MADLN05SG
		Basic type *2	MADLN05SE
	Frame symbol		A-frame
Power supply capacity		(kVA)	0.5
Rated output		(W)	100
Rated torque		(N·m)	0.32
Continuous stall torque		(N·m)	0.32
Momentary Max. peak torque		(N·m)	0.95
Rated current		(A(rms))	1.1
Max. current		(A(o-p))	4.7
Regenerative brake frequency (times/min) Note)1	Without option		No limit Note)2
	DV0P4281		No limit Note)2
Rated rotational speed		(r/min)	3000
Max. rotational speed		(r/min)	6000
Moment of inertia of rotor ($\times 10^{-4}$ kg·m^2)	Without brake		0.048
	With brake		0.051
Recommended moment of inertia ratio of the load and the rotor Note)3			30 times or less
Rotary encoder specifications *3			23-bit Absolute
	Resolution per single turn		8388608

- **Brake specifications** (For details, refer to P.305)

(This brake will be released when it is energized. Do not use this for braking the motor in motion.)

Static friction torque (N·m)	0.294 or more
Engaging time (ms)	35 or less
Releasing time (ms) Note)4	20 or less
Exciting current (DC) (A)	0.30
Releasing voltage (DC) (V)	1 or more
Exciting voltage (DC) (V)	24±1.2

- **Permissible load** (For details, refer to P.304)

During assembly	Radial load P-direction (N)	147
	Thrust load A-direction (N)	88.0
	Thrust load B-direction (N)	117.6
During operation	Radial load P-direction (N)	68.6
	Thrust load A, B-direction (N)	58.8

- For details of Note)1 to Note)4, refer to P.303.
- Dimensions of Driver, refer to P.57.

*1 □□ in the motor part number represents the motor specifications.

*2 Basic type and RS485 communication type are "Position control type". Detail of model designation, refer to P.22.

*3 When using a rotary encoder as an incremental system (not using multi-turn data), do not connect a battery for absolute encoder.

Torque characteristics (at AC200 V of power voltage <Dotted line represents the torque at 10 % less supply voltage.>)

Without oil seal

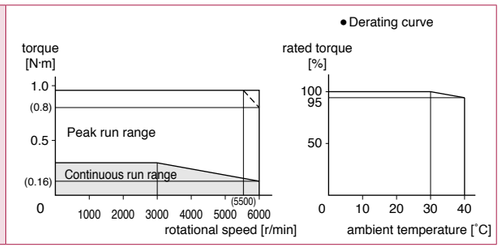

With oil seal

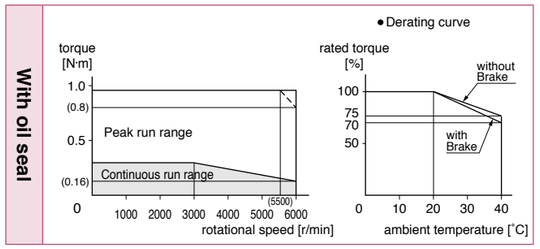

Dimensions

Motor specifications	Round shaft/ Key way, center tap shaft					
	without brake			with brake		
	without oil seal	with oil seal	with protective lip/ with oil seal	without oil seal	with oil seal	with protective lip/ with oil seal
Leadwire type (IP65)	P.120		—	P.120		—
Connector type (IP67)	P.121		—	P.121		—

<Cautions> Reduce the moment of inertia ratio if high speed response operation is required.
Dimensions are subject to change without notice. Contact us or a dealer for the latest information.
Read the Instruction Manual carefully and understand all precautions and remarks before using the products.

100 V MSMF 200 W [Low inertia 60 mm sq.] IP65

Specifications

			AC100 V
Motor model *1			MSMF021L1□□
Applicable driver	Model No.	Multifunction type	MBDLT21SF
		RS485 communication type *2	MBDLN21SG
		Basic type *2	MBDLN21SE
	Frame symbol		B-frame
Power supply capacity (kVA)			0.5
Rated output (W)			200
Rated torque (N·m)			0.64
Continuous stall torque (N·m)			0.64
Momentary Max. peak torque (N·m)			1.91
Rated current (A(rms))			2.5
Max. current (A(o-p))			10.6
Regenerative brake frequency (times/min) Note)1		Without option	No limit Note)2
		DV0P4283	No limit Note)2
Rated rotational speed (r/min)			3000
Max. rotational speed (r/min)			6000
Moment of inertia of rotor ($\times 10^{-4}$ kg·m^2)		Without brake	0.14
		With brake	0.17
Recommended moment of inertia ratio of the load and the rotor Note)3			30 times or less
Rotary encoder specifications *3			23-bit Absolute
	Resolution per single turn		8388608

• Brake specifications (For details, refer to P.305)

(This brake will be released when it is energized. Do not use this for braking the motor in motion.)

Static friction torque (N·m)	1.27 or more
Engaging time (ms)	50 or less
Releasing time (ms) Note)4	15 or less
Exciting current (DC) (A)	0.36
Releasing voltage (DC) (V)	1 or more
Exciting voltage (DC) (V)	24±1.2

• Permissible load (For details, refer to P.304)

During assembly	Radial load P-direction (N)	392
	Thrust load A-direction (N)	147
	Thrust load B-direction (N)	196
During operation	Radial load P-direction (N)	245
	Thrust load A, B-direction (N)	98.0

- For details of Note)1 to Note)4, refer to P.303.
- Dimensions of Driver, refer to P.57.

*1 □□ in the motor part number represents the motor specifications.

*2 Basic type and RS485 communication type are "Position control type". Detail of model designation, refer to P.22.

*3 When using a rotary encoder as an incremental system (not using multi-turn data), do not connect a battery for absolute encoder.

Torque characteristics (at AC100 V of power voltage <Dotted line represents the torque at 10 % less supply voltage.>)

Without oil seal

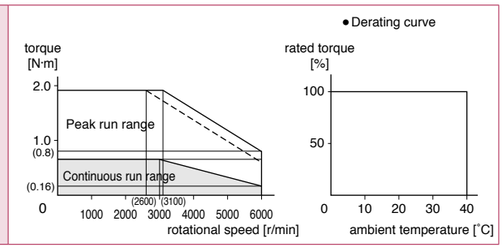

With oil seal

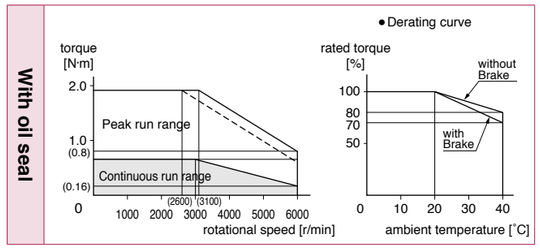

Dimensions

Motor specifications	Round shaft/ Key way, center tap shaft					
	without brake			with brake		
	without oil seal	with oil seal	with protective lip/ with oil seal	without oil seal	with oil seal	with protective lip/ with oil seal
Leadwire type (IP65)	P.121		—	P.122		—
Connector type (IP67)	P.122		—	P.122		—

<Cautions> Reduce the moment of inertia ratio if high speed response operation is required.
Dimensions are subject to change without notice. Contact us or a dealer for the latest information.
Read the Instruction Manual carefully and understand all precautions and remarks before using the products.

Specifications

			AC200 V
Motor model *1			MSMF022L1□□
Applicable driver	Model No.	Multifunction type	MADLT15SF
		RS485 communication type *2	MADLN15SG
		Basic type *2	MADLN15SE
	Frame symbol		A-frame
Power supply capacity (kVA)			0.5
Rated output (W)			200
Rated torque (N·m)			0.64
Continuous stall torque (N·m)			0.64
Momentary Max. peak torque (N·m)			1.91
Rated current (A(rms))			1.5
Max. current (A(o-p))			6.5
Regenerative brake frequency (times/min) Note)1		Without option	No limit Note)2
		DV0P4283	No limit Note)2
Rated rotational speed (r/min)			3000
Max. rotational speed (r/min)			6000
Moment of inertia of rotor ($\times 10^{-4}$ kg·m^2)		Without brake	0.14
		With brake	0.17
Recommended moment of inertia ratio of the load and the rotor Note)3			30 times or less
Rotary encoder specifications *3			23-bit Absolute
	Resolution per single turn		8388608

• Brake specifications (For details, refer to P.305)

(This brake will be released when it is energized. Do not use this for braking the motor in motion.)

Static friction torque (N·m)	1.27 or more
Engaging time (ms)	50 or less
Releasing time (ms) Note)4	15 or less
Exciting current (DC) (A)	0.36
Releasing voltage (DC) (V)	1 or more
Exciting voltage (DC) (V)	24±1.2

• Permissible load (For details, refer to P.304)

During assembly	Radial load P-direction (N)	392
	Thrust load A-direction (N)	147
	Thrust load B-direction (N)	196
During operation	Radial load P-direction (N)	245
	Thrust load A, B-direction (N)	98.0

- For details of Note)1 to Note)4, refer to P.303.
- Dimensions of Driver, refer to P.57.

*1 □□ in the motor part number represents the motor specifications.

*2 Basic type and RS485 communication type are "Position control type". Detail of model designation, refer to P.22.

*3 When using a rotary encoder as an incremental system (not using multi-turn data), do not connect a battery for absolute encoder.

Torque characteristics (at AC200 V of power voltage <Dotted line represents the torque at 10 % less supply voltage.>)

Without oil seal

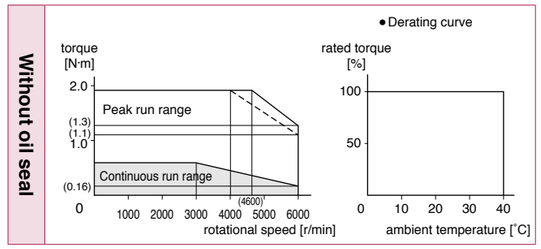

With oil seal

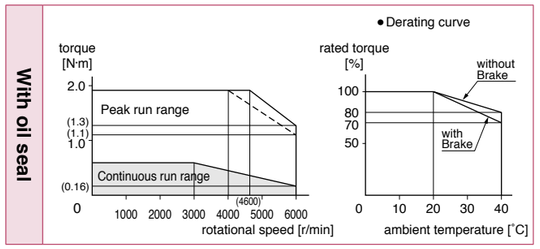

Dimensions

Motor specifications	Round shaft/ Key way, center tap shaft					
	without brake			with brake		
	without oil seal	with oil seal	with protective lip/ with oil seal	without oil seal	with oil seal	with protective lip/ with oil seal
Leadwire type (IP65)	P.121		—	P.122		—
Connector type (IP67)	P.122		—	P.122		—

<Cautions> Reduce the moment of inertia ratio if high speed response operation is required.
Dimensions are subject to change without notice. Contact us or a dealer for the latest information.
Read the Instruction Manual carefully and understand all precautions and remarks before using the products.

100 V MSMF 400 W [Low inertia 60 mm sq.] IP65

Specifications

			AC100 V
Motor model *1			MSMF041L1□□
Applicable driver	Model No.	Multifunction type	MCDLT31SF
		RS485 communication type *2	MCDLN31SG
		Basic type *2	MCDLN31SE
	Frame symbol		C-frame
Power supply capacity		(kVA)	0.9
Rated output		(W)	400
Rated torque		(N·m)	1.27
Continuous stall torque		(N·m)	1.27
Momentary Max. peak torque		(N·m)	3.82
Rated current		(A(rms))	4.6
Max. current		(A(o-p))	19.5
Regenerative brake frequency (times/min) Note)1	Without option		No limit Note)2
	DV0P4282		No limit Note)2
Rated rotational speed		(r/min)	3000
Max. rotational speed		(r/min)	6000
Moment of inertia of rotor ($\times 10^{-4}$ kg·m^2)	Without brake		0.27
	With brake		0.30
Recommended moment of inertia ratio of the load and the rotor Note)3			30 times or less
Rotary encoder specifications *3			23-bit Absolute
	Resolution per single turn		8388608

- **Brake specifications** (For details, refer to P.305)

(This brake will be released when it is energized. Do not use this for braking the motor in motion.)

Static friction torque (N·m)	1.27 or more
Engaging time (ms)	50 or less
Releasing time (ms) Note)4	15 or less
Exciting current (DC) (A)	0.36
Releasing voltage (DC) (V)	1 or more
Exciting voltage (DC) (V)	24±1.2

- **Permissible load** (For details, refer to P.304)

During assembly	Radial load P-direction (N)	392
	Thrust load A-direction (N)	147
	Thrust load B-direction (N)	196
During operation	Radial load P-direction (N)	245
	Thrust load A, B-direction (N)	98.0

- For details of Note)1 to Note)4, refer to P.303.
- Dimensions of Driver, refer to P.58.

*1 □□ in the motor part number represents the motor specifications.

*2 Basic type and RS485 communication type are "Position control type". Detail of model designation, refer to P.22.

*3 When using a rotary encoder as an incremental system (not using multi-turn data), do not connect a battery for absolute encoder.

Torque characteristics (at AC100 V of power voltage <Dotted line represents the torque at 10 % less supply voltage.>)

Without oil seal

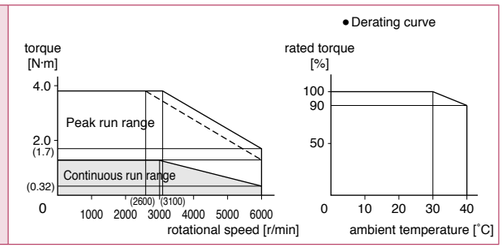

With oil seal

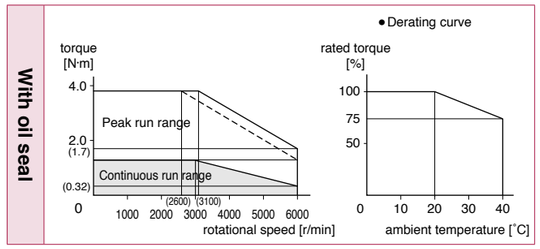

Dimensions

Motor specifications	Round shaft/ Key way, center tap shaft					
	without brake			with brake		
	without oil seal	with oil seal	with protective lip/ with oil seal	without oil seal	with oil seal	with protective lip/ with oil seal
Leadwire type (IP65)	P.123		—	P.123		—
Connector type (IP67)	P.123		—	P.124		—

<Cautions> Reduce the moment of inertia ratio if high speed response operation is required.
Dimensions are subject to change without notice. Contact us or a dealer for the latest information.
Read the Instruction Manual carefully and understand all precautions and remarks before using the products.

Specifications

			AC200 V
Motor model *1			MSMF042L1□□
Applicable driver	Model No.	Multifunction type	MBDLT25SF
		RS485 communication type *2	MBDLN25SG
		Basic type *2	MBDLN25SE
	Frame symbol		B-frame
Power supply capacity		(kVA)	0.9
Rated output		(W)	400
Rated torque		(N·m)	1.27
Continuous stall torque		(N·m)	1.27
Momentary Max. peak torque		(N·m)	3.82
Rated current		(A(rms))	2.4
Max. current		(A(o-p))	10.2
Regenerative brake frequency (times/min) Note)1	Without option		No limit Note)2
	DV0P4283		No limit Note)2
Rated rotational speed		(r/min)	3000
Max. rotational speed		(r/min)	6000
Moment of inertia of rotor ($\times 10^{-4}$ kg·m^2)	Without brake		0.27
	With brake		0.30
Recommended moment of inertia ratio of the load and the rotor Note)3			30 times or less
Rotary encoder specifications *3			23-bit Absolute
	Resolution per single turn		8388608

- **Brake specifications** (For details, refer to P.305)

(This brake will be released when it is energized. Do not use this for braking the motor in motion.)

Static friction torque (N·m)	1.27 or more
Engaging time (ms)	50 or less
Releasing time (ms) Note)4	15 or less
Exciting current (DC) (A)	0.36
Releasing voltage (DC) (V)	1 or more
Exciting voltage (DC) (V)	24±1.2

- **Permissible load** (For details, refer to P.304)

During assembly	Radial load P-direction (N)	392
	Thrust load A-direction (N)	147
	Thrust load B-direction (N)	196
During operation	Radial load P-direction (N)	245
	Thrust load A, B-direction (N)	98.0

- For details of Note)1 to Note)4, refer to P.303.
- Dimensions of Driver, refer to P.57.

*1 □□ in the motor part number represents the motor specifications.

*2 Basic type and RS485 communication type are "Position control type". Detail of model designation, refer to P.22.

*3 When using a rotary encoder as an incremental system (not using multi-turn data), do not connect a battery for absolute encoder.

Torque characteristics (at AC200 V of power voltage <Dotted line represents the torque at 10 % less supply voltage.>)

Without oil seal

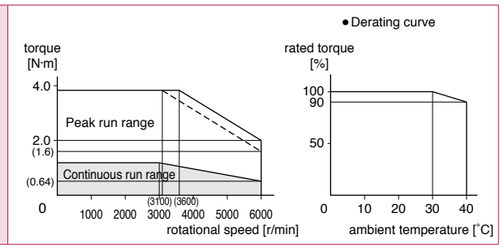

With oil seal

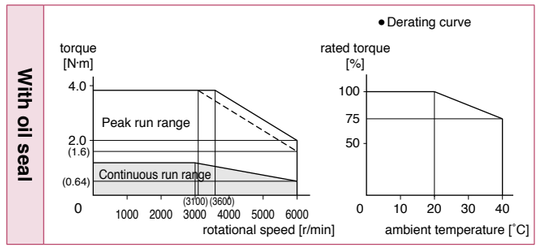

Dimensions

Motor specifications	Round shaft/ Key way, center tap shaft					
	without brake			with brake		
	without oil seal	with oil seal	with protective lip/ with oil seal	without oil seal	with oil seal	with protective lip/ with oil seal
Leadwire type (IP65)	P.123		—	P.123		—
Connector type (IP67)	P.123		—	P.124		—

<Cautions> Reduce the moment of inertia ratio if high speed response operation is required.
Dimensions are subject to change without notice. Contact us or a dealer for the latest information.
Read the Instruction Manual carefully and understand all precautions and remarks before using the products.

200 V MSMF 750 W [Low inertia 80 mm sq.] IP65

Specifications

			AC200 V
Motor model *1			MSMF082L1□□
Applicable driver	Model No.	Multifunction type	MCDLT35SF
		RS485 communication type *2	MCDLN35SG
		Basic type *2	MCDLN35SE
	Frame symbol		C-frame
Power supply capacity		(kVA)	1.8
Rated output		(W)	750
Rated torque		(N·m)	2.39
Continuous stall torque		(N·m)	2.39
Momentary Max. peak torque		(N·m)	7.16
Rated current		(A(rms))	4.1
Max. current		(A(o-p))	17.4
Regenerative brake frequency (times/min) Note)1	Without option		No limit Note)2
	DV0P4283		No limit Note)2
Rated rotational speed		(r/min)	3000
Max. rotational speed		(r/min)	6000
Moment of inertia of rotor ($\times 10^{-4}$ kg·m^2)	Without brake		0.96
	With brake		1.06
Recommended moment of inertia ratio of the load and the rotor Note)3			20 times or less
Rotary encoder specifications *3			23-bit Absolute
	Resolution per single turn		8388608

- **Brake specifications** (For details, refer to P.305)

(This brake will be released when it is energized. Do not use this for braking the motor in motion.)

Static friction torque (N·m)	2.45 or more
Engaging time (ms)	70 or less
Releasing time (ms) Note)4	20 or less
Exciting current (DC) (A)	0.42
Releasing voltage (DC) (V)	1 or more
Exciting voltage (DC) (V)	24±1.2

- **Permissible load** (For details, refer to P.304)

During assembly	Radial load P-direction (N)	686
	Thrust load A-direction (N)	294
	Thrust load B-direction (N)	392
During operation	Radial load P-direction (N)	392
	Thrust load A, B-direction (N)	147

- For details of Note)1 to Note)4, refer to P.303.
- Dimensions of Driver, refer to P.58.

*1 □□ in the motor part number represents the motor specifications.

*2 Basic type and RS485 communication type are "Position control type". Detail of model designation, refer to P.22.

*3 When using a rotary encoder as an incremental system (not using multi-turn data), do not connect a battery for absolute encoder.

Torque characteristics (at AC200 V of power voltage <Dotted line represents the torque at 10 % less supply voltage.>)

Without oil seal

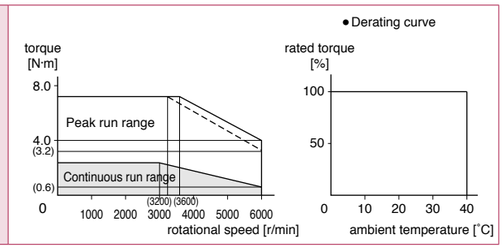

With oil seal

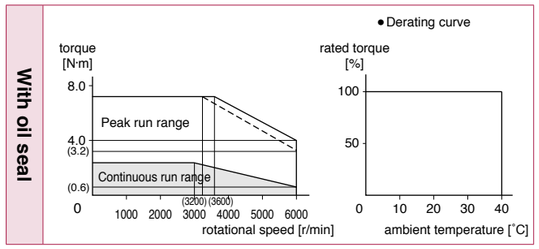

Dimensions

Motor specifications	Round shaft/ Key way, center tap shaft					
	without brake			with brake		
	without oil seal	with oil seal	with protective lip/ with oil seal	without oil seal	with oil seal	with protective lip/ with oil seal
Leadwire type (IP65)	P.124		—	P.124		—
Connector type (IP67)	P.125		—	P.125		—

<Cautions> Reduce the moment of inertia ratio if high speed response operation is required.
Dimensions are subject to change without notice. Contact us or a dealer for the latest information.
Read the Instruction Manual carefully and understand all precautions and remarks before using the products.

Specifications

			AC200 V
Motor model *1			MSMF092L1□□
Applicable driver	Model No.	Multifunction type	MDDLT45SF
		RS485 communication type *2	MDDLN45SG
		Basic type *2	MDDLN45SE
	Frame symbol		D-frame
Power supply capacity		(kVA)	2.4
Rated output		(W)	1000
Rated torque		(N·m)	3.18
Continuous stall torque		(N·m)	3.18
Momentary Max. peak torque		(N·m)	9.55
Rated current		(A(rms))	5.7
Max. current		(A(o-p))	24.2
Regenerative brake frequency (times/min) Note)1	Without option		No limit Note)2
	DV0P4284		No limit Note)2
Rated rotational speed		(r/min)	3000
Max. rotational speed		(r/min)	6000
Moment of inertia of rotor ($\times 10^{-4}$ kg·m^2)	Without brake		1.26
	With brake		1.36
Recommended moment of inertia ratio of the load and the rotor Note)3			15 times or less
Rotary encoder specifications *3			23-bit Absolute
	Resolution per single turn		8388608

- **Brake specifications** (For details, refer to P.305)

(This brake will be released when it is energized. Do not use this for braking the motor in motion.)

Static friction torque (N·m)	3.80 or more
Engaging time (ms)	70 or less
Releasing time (ms) Note)4	20 or less
Exciting current (DC) (A)	0.42
Releasing voltage (DC) (V)	1 or more
Exciting voltage (DC) (V)	24±2.4

- **Permissible load** (For details, refer to P.304)

During assembly	Radial load P-direction (N)	686
	Thrust load A-direction (N)	294
	Thrust load B-direction (N)	392
During operation	Radial load P-direction (N)	392
	Thrust load A, B-direction (N)	147

- For details of Note)1 to Note)4, refer to P.303.
- Dimensions of Driver, refer to P.58.

*1 □□ in the motor part number represents the motor specifications.

*2 Basic type and RS485 communication type are "Position control type". Detail of model designation, refer to P.22.

*3 When using a rotary encoder as an incremental system (not using multi-turn data), do not connect a battery for absolute encoder.

Torque characteristics (at AC200 V of power voltage <Dotted line represents the torque at 10 % less supply voltage.>)

Without oil seal

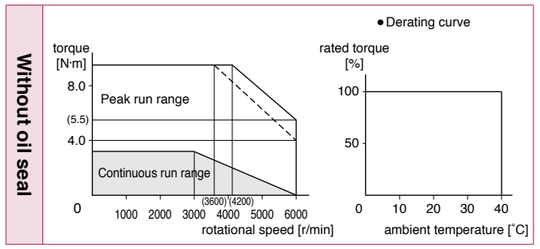

With oil seal

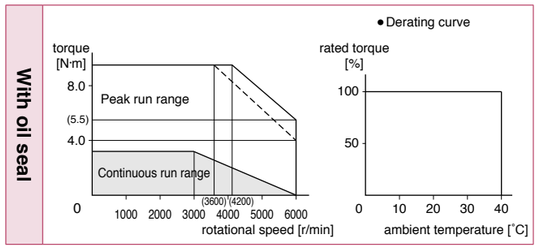

Dimensions

Motor specifications	Round shaft/ Key way, center tap shaft					
	without brake			with brake		
	without oil seal	with oil seal	with protective lip/ with oil seal	without oil seal	with oil seal	with protective lip/ with oil seal
Leadwire type (IP65)	P.125		—	P.126		—
Connector type (IP67)	P.126		—	P.126		—

<Cautions> Reduce the moment of inertia ratio if high speed response operation is required.
Dimensions are subject to change without notice. Contact us or a dealer for the latest information.
Read the Instruction Manual carefully and understand all precautions and remarks before using the products.

200 V MSMF 1.0 kW [Low inertia 100 mm sq.] IP67

Specifications

			AC200 V
Motor model *1			MSMF102L1□□
Applicable driver	Model No.	Multifunction type	MDDLT55SF
		RS485 communication type *2	MDDLN55SG
		Basic type *2	MDDLN55SE
	Frame symbol		D-frame
Power supply capacity		(kVA)	2.4
Rated output		(W)	1000
Rated torque		(N·m)	3.18
Continuous stall torque		(N·m)	3.82
Momentary Max. peak torque		(N·m)	9.55
Rated current		(A(rms))	6.6
Max. current		(A(o-p))	28
Regenerative brake frequency (times/min) Note)1	Without option		No limit Note)2
	DV0P4284		No limit Note)2
Rated rotational speed		(r/min)	3000
Max. rotational speed		(r/min)	5000
Moment of inertia of rotor ($\times 10^{-4}$ kg·m^2)	Without brake		2.15
	With brake		2.47
Recommended moment of inertia ratio of the load and the rotor Note)3			15 times or less
Rotary encoder specifications *3			23-bit Absolute
	Resolution per single turn		8388608

- **Brake specifications** (For details, refer to P.305)

(This brake will be released when it is energized. Do not use this for braking the motor in motion.)

Static friction torque (N·m)	8.0 or more
Engaging time (ms)	50 or less
Releasing time (ms) Note)4	15 or less
Exciting current (DC) (A)	0.81
Releasing voltage (DC) (V)	2 or more
Exciting voltage (DC) (V)	24±2.4

- **Permissible load** (For details, refer to P.304)

During assembly	Radial load P-direction (N)	980
	Thrust load A-direction (N)	588
	Thrust load B-direction (N)	686
During operation	Radial load P-direction (N)	490
	Thrust load A, B-direction (N)	196

- For details of Note)1 to Note)4, refer to P.303.
- Dimensions of Driver, refer to P.58.

*1 □□ in the motor part number represents the motor specifications.

*2 Basic type and RS485 communication type are "Position control type". Detail of model designation, refer to P.22.

*3 When using a rotary encoder as an incremental system (not using multi-turn data), do not connect a battery for absolute encoder.

Torque characteristics (at AC200 V of power voltage <Dotted line represents the torque at 10 % less supply voltage.>)

With oil seal

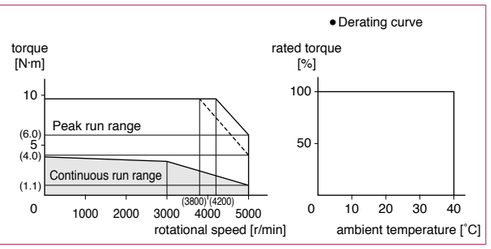

Dimensions

Motor specifications	Key way shaft/ Round shaft					
	without brake			with brake		
	without oil seal	with oil seal	with protective lip/ with oil seal	without oil seal	with oil seal	with protective lip/ with oil seal
Encoder connector Large size (JL10) type	—	P.127		—	P.127	
Encoder connector Small size (JN2) type	—	P.127		—	P.128	

<Cautions> Reduce the moment of inertia ratio if high speed response operation is required.
Dimensions are subject to change without notice. Contact us or a dealer for the latest information.
Read the Instruction Manual carefully and understand all precautions and remarks before using the products.

Specifications

			AC200 V
Motor model *1			MSMF152L1□□
Applicable driver	Model No.	Multifunction type	MDDLT55SF
		RS485 communication type *2	MDDLN55SG
		Basic type *2	MDDLN55SE
	Frame symbol		D-frame
Power supply capacity		(kVA)	2.9
Rated output		(W)	1500
Rated torque		(N·m)	4.77
Continuous stall torque		(N·m)	5.72
Momentary Max. peak torque		(N·m)	14.3
Rated current		(A(rms))	8.2
Max. current		(A(o-p))	35
Regenerative brake frequency (times/min) Note)1	Without option		No limit Note)2
	DV0P4284		No limit Note)2
Rated rotational speed		(r/min)	3000
Max. rotational speed		(r/min)	5000
Moment of inertia of rotor ($\times 10^{-4}$ kg·m^2)	Without brake		3.10
	With brake		3.45
Recommended moment of inertia ratio of the load and the rotor Note)3			15 times or less
Rotary encoder specifications *3			23-bit Absolute
	Resolution per single turn		8388608

- **Brake specifications** (For details, refer to P.305)

(This brake will be released when it is energized. Do not use this for braking the motor in motion.)

Static friction torque (N·m)	8.0 or more
Engaging time (ms)	50 or less
Releasing time (ms) Note)4	15 or less
Exciting current (DC) (A)	0.81
Releasing voltage (DC) (V)	2 or more
Exciting voltage (DC) (V)	24±2.4

- **Permissible load** (For details, refer to P.304)

During assembly	Radial load P-direction (N)	980
	Thrust load A-direction (N)	588
	Thrust load B-direction (N)	686
During operation	Radial load P-direction (N)	490
	Thrust load A, B-direction (N)	196

- For details of Note)1 to Note)4, refer to P.303.
- Dimensions of Driver, refer to P.58.

*1 □□ in the motor part number represents the motor specifications.

*2 Basic type and RS485 communication type are "Position control type". Detail of model designation, refer to P.22.

*3 When using a rotary encoder as an incremental system (not using multi-turn data), do not connect a battery for absolute encoder.

Torque characteristics (at AC200 V of power voltage <Dotted line represents the torque at 10 % less supply voltage.>)

With oil seal

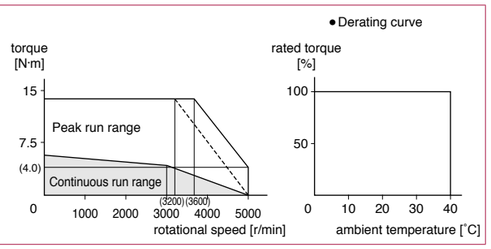

Dimensions

Motor specifications	Key way shaft/ Round shaft					
	without brake			with brake		
	without oil seal	with oil seal	with protective lip/ with oil seal	without oil seal	with oil seal	with protective lip/ with oil seal
Encoder connector Large size (JL10) type	—	P.128		—	P.128	
Encoder connector Small size (JN2) type	—	P.129		—	P.129	

<Cautions> Reduce the moment of inertia ratio if high speed response operation is required.
Dimensions are subject to change without notice. Contact us or a dealer for the latest information.
Read the Instruction Manual carefully and understand all precautions and remarks before using the products.

200 V MSMF 2.0 kW [Low inertia 100 mm sq.] IP67

Specifications

			AC200 V
Motor model *1			MSMF202L1□□
Applicable driver	Model No.	Multifunction type	MEDLT83SF
		RS485 communication type *2	MEDLN83SG
		Basic type *2	MEDLN83SE
	Frame symbol		E-frame
Power supply capacity (kVA)			3.8
Rated output (W)			2000
Rated torque (N·m)			6.37
Continuous stall torque (N·m)			7.64
Momentary Max. peak torque (N·m)			19.1
Rated current (A(rms))			11.3
Max. current (A(o-p))			48
Regenerative brake frequency (times/min) Note)1		Without option	No limit Note)2
		DV0P4285	No limit Note)2
Rated rotational speed (r/min)			3000
Max. rotational speed (r/min)			5000
Moment of inertia of rotor ($\times 10^{-4}$ kg·m^2)		Without brake	4.06
		With brake	4.41
Recommended moment of inertia ratio of the load and the rotor Note)3			15 times or less
Rotary encoder specifications *3			23-bit Absolute
	Resolution per single turn		8388608

- **Brake specifications** (For details, refer to P.305)

(This brake will be released when it is energized. Do not use this for braking the motor in motion.)

Static friction torque (N·m)	8.0 or more
Engaging time (ms)	50 or less
Releasing time (ms) Note)4	15 or less
Exciting current (DC) (A)	0.81
Releasing voltage (DC) (V)	2 or more
Exciting voltage (DC) (V)	24±2.4

- **Permissible load** (For details, refer to P.304)

During assembly	Radial load P-direction (N)	980
	Thrust load A-direction (N)	588
	Thrust load B-direction (N)	686
During operation	Radial load P-direction (N)	490
	Thrust load A, B-direction (N)	196

- For details of Note)1 to Note)4, refer to P.303.
- Dimensions of Driver, refer to P.59.

*1 □□ in the motor part number represents the motor specifications.

*2 Basic type and RS485 communication type are "Position control type". Detail of model designation, refer to P.22.

*3 When using a rotary encoder as an incremental system (not using multi-turn data), do not connect a battery for absolute encoder.

Torque characteristics (at AC200 V of power voltage <Dotted line represents the torque at 10 % less supply voltage.>)

With oil seal

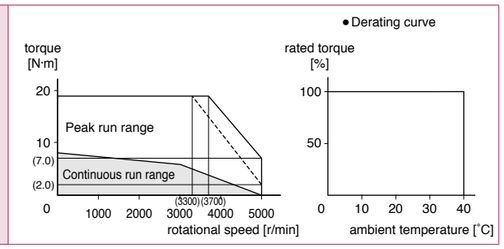

Dimensions

Motor specifications	Key way shaft/ Round shaft					
	without brake			with brake		
	without oil seal	with oil seal	with protective lip/ with oil seal	without oil seal	with oil seal	with protective lip/ with oil seal
Encoder connector Large size (JL10) type	—	P.129		—	P.130	
Encoder connector Small size (JN2) type	—	P.130		—	P.130	

<Cautions> Reduce the moment of inertia ratio if high speed response operation is required.
Dimensions are subject to change without notice. Contact us or a dealer for the latest information.
Read the Instruction Manual carefully and understand all precautions and remarks before using the products.

Specifications

			AC200 V
Motor model *1			MSMF302L1□□
Applicable driver	Model No.	Multifunction type	MFDLTA3SF
		RS485 communication type *2	MFDLNA3SG
		Basic type *2	MFDLNA3SE
	Frame symbol		F-frame
Power supply capacity (kVA)			5.2
Rated output (W)			3000
Rated torque (N·m)			9.55
Continuous stall torque (N·m)			11.0
Momentary Max. peak torque (N·m)			28.6
Rated current (A(rms))			18.1
Max. current (A(o-p))			77
Regenerative brake frequency (times/min) Note)1		Without option	No limit Note)2
		DV0P4285×2	No limit Note)2
Rated rotational speed (r/min)			3000
Max. rotational speed (r/min)			5000
Moment of inertia of rotor ($\times 10^{-4}$ kg·m^2)		Without brake	7.04
		With brake	7.38
Recommended moment of inertia ratio of the load and the rotor Note)3			15 times or less
Rotary encoder specifications *3			23-bit Absolute
	Resolution per single turn		8388608

- **Brake specifications** (For details, refer to P.305)

(This brake will be released when it is energized. Do not use this for braking the motor in motion.)

Static friction torque (N·m)	12.0 or more
Engaging time (ms)	80 or less
Releasing time (ms) Note)4	15 or less
Exciting current (DC) (A)	0.81
Releasing voltage (DC) (V)	2 or more
Exciting voltage (DC) (V)	24±2.4

- **Permissible load** (For details, refer to P.304)

During assembly	Radial load P-direction (N)	980
	Thrust load A-direction (N)	588
	Thrust load B-direction (N)	686
During operation	Radial load P-direction (N)	490
	Thrust load A, B-direction (N)	196

- For details of Note)1 to Note)4, refer to P.303.
- Dimensions of Driver, refer to P.59.

*1 □□ in the motor part number represents the motor specifications.

*2 Basic type and RS485 communication type are "Position control type". Detail of model designation, refer to P.22.

*3 When using a rotary encoder as an incremental system (not using multi-turn data), do not connect a battery for absolute encoder.

Torque characteristics (at AC200 V of power voltage <Dotted line represents the torque at 10 % less supply voltage.>)

With oil seal

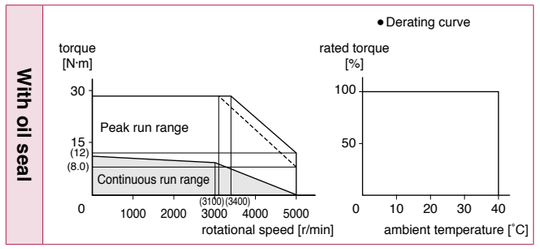

Dimensions

Motor specifications	Key way shaft/ Round shaft					
	without brake			with brake		
	without oil seal	with oil seal	with protective lip/ with oil seal	without oil seal	with oil seal	with protective lip/ with oil seal
Encoder connector Large size (JL10) type	—	P.131		—	P.131	
Encoder connector Small size (JN2) type	—	P.131		—	P.132	

<Cautions> Reduce the moment of inertia ratio if high speed response operation is required.
Dimensions are subject to change without notice. Contact us or a dealer for the latest information.
Read the Instruction Manual carefully and understand all precautions and remarks before using the products.

200 V MSMF 4.0 kW [Low inertia 130 mm sq.] IP67

Specifications

			AC200 V
Motor model *1			MSMF402L1□□
Applicable driver	Model No.	Multifunction type	MFDLTB3SF
		RS485 communication type *2	MFDLNB3SG
		Basic type *2	MFDLNB3SE
	Frame symbol		F-frame
Power supply capacity		(kVA)	6.5
Rated output		(W)	4000
Rated torque		(N·m)	12.7
Continuous stall torque		(N·m)	15.2
Momentary Max. peak torque		(N·m)	38.2
Rated current		(A(rms))	19.6
Max. current		(A(o-p))	83
Regenerative brake frequency (times/min) Note)1	Without option		No limit Note)2
	DV0P4285×2		No limit Note)2
Rated rotational speed		(r/min)	3000
Max. rotational speed		(r/min)	4500
Moment of inertia of rotor (×10^{-4} kg·m^2)	Without brake		14.4
	With brake		15.6
Recommended moment of inertia ratio of the load and the rotor Note)3			15 times or less
Rotary encoder specifications *3			23-bit Absolute
	Resolution per single turn		8388608

- **Brake specifications** (For details, refer to P.305)

(This brake will be released when it is energized. Do not use this for braking the motor in motion.)

Static friction torque (N·m)	16.2 or more
Engaging time (ms)	110 or less
Releasing time (ms) Note)4	50 or less
Exciting current (DC) (A)	0.90
Releasing voltage (DC) (V)	2 or more
Exciting voltage (DC) (V)	24±2.4

- **Permissible load** (For details, refer to P.304)

During assembly	Radial load P-direction (N)	980
	Thrust load A-direction (N)	588
	Thrust load B-direction (N)	686
During operation	Radial load P-direction (N)	784
	Thrust load A, B-direction (N)	343

- For details of Note)1 to Note)4, refer to P.303.
- Dimensions of Driver, refer to P.59.

*1 □□ in the motor part number represents the motor specifications.

*2 Basic type and RS485 communication type are "Position control type". Detail of model designation, refer to P.22.

*3 When using a rotary encoder as an incremental system (not using multi-turn data), do not connect a battery for absolute encoder.

Torque characteristics (at AC200 V of power voltage <Dotted line represents the torque at 10 % less supply voltage.>)

With oil seal

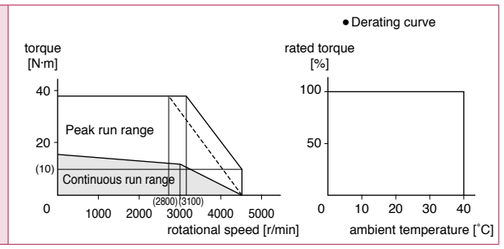

Dimensions

Motor specifications	Key way shaft/ Round shaft					
	without brake			with brake		
	without oil seal	with oil seal	with protective lip/ with oil seal	without oil seal	with oil seal	with protective lip/ with oil seal
Encoder connector Large size (JL10) type	—	P.132		—	P.132	
Encoder connector Small size (JN2) type	—	P.133		—	P.133	

<Cautions> Reduce the moment of inertia ratio if high speed response operation is required.
Dimensions are subject to change without notice. Contact us or a dealer for the latest information.
Read the Instruction Manual carefully and understand all precautions and remarks before using the products.

Specifications

			AC200 V
Motor model *1			MSMF502L1□□
Applicable driver	Model No.	Multifunction type	MFDLTB3SF
		RS485 communication type *2	MFDLNB3SG
		Basic type *2	MFDLNB3SE
	Frame symbol		F-frame
Power supply capacity		(kVA)	7.8
Rated output		(W)	5000
Rated torque		(N·m)	15.9
Continuous stall torque		(N·m)	19.1
Momentary Max. peak torque		(N·m)	47.7
Rated current		(A(rms))	24.0
Max. current		(A(o-p))	102
Regenerative brake frequency (times/min) Note)1	Without option		No limit Note)2
	DV0P4285×2		No limit Note)2
Rated rotational speed		(r/min)	3000
Max. rotational speed		(r/min)	4500
Moment of inertia of rotor (×10^{-4} kg·m^2)	Without brake		19.0
	With brake		20.2
Recommended moment of inertia ratio of the load and the rotor Note)3			15 times or less
Rotary encoder specifications *3			23-bit Absolute
	Resolution per single turn		8388608

- **Brake specifications** (For details, refer to P.305)

(This brake will be released when it is energized. Do not use this for braking the motor in motion.)

Static friction torque (N·m)	22.0 or more
Engaging time (ms)	110 or less
Releasing time (ms) Note)4	50 or less
Exciting current (DC) (A)	0.90
Releasing voltage (DC) (V)	2 or more
Exciting voltage (DC) (V)	24±2.4

- **Permissible load** (For details, refer to P.304)

During assembly	Radial load P-direction (N)	980
	Thrust load A-direction (N)	588
	Thrust load B-direction (N)	686
During operation	Radial load P-direction (N)	784
	Thrust load A, B-direction (N)	343

- For details of Note)1 to Note)4, refer to P.303.
- Dimensions of Driver, refer to P.59.

*1 □□ in the motor part number represents the motor specifications.

*2 Basic type and RS485 communication type are "Position control type". Detail of model designation, refer to P.22.

*3 When using a rotary encoder as an incremental system (not using multi-turn data), do not connect a battery for absolute encoder.

Torque characteristics (at AC200 V of power voltage <Dotted line represents the torque at 10 % less supply voltage.>)

With oil seal

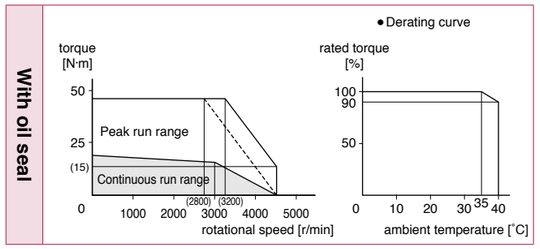

Dimensions

Motor specifications	Key way shaft/ Round shaft					
	without brake			with brake		
	without oil seal	with oil seal	with protective lip/ with oil seal	without oil seal	with oil seal	with protective lip/ with oil seal
Encoder connector Large size (JL10) type	—	P.133		—	P.134	
Encoder connector Small size (JN2) type	—	P.134		—	P.134	

<Cautions> Reduce the moment of inertia ratio if high speed response operation is required.
Dimensions are subject to change without notice. Contact us or a dealer for the latest information.
Read the Instruction Manual carefully and understand all precautions and remarks before using the products.

100 V MQMF 100 W [Middle inertia Flat type 60 mm sq.] IP65

Specifications

			AC100 V
Motor model *1			MQMF011L1□□
Applicable driver	Model No.	Multifunction type	MADLT11SF
		RS485 communication type *2	MADLN11SG
		Basic type *2	MADLN11SE
	Frame symbol		A-frame
Power supply capacity		(kVA)	0.4
Rated output		(W)	100
Rated torque		(N·m)	0.32
Continuous stall torque		(N·m)	0.33
Momentary Max. peak torque		(N·m)	1.11
Rated current		(A(rms))	1.6
Max. current		(A(o-p))	7.9
Regenerative brake frequency (times/min) Note)1	Without option		No limit Note)2
	DV0P4280		No limit Note)2
Rated rotational speed		(r/min)	3000
Max. rotational speed		(r/min)	6500
Moment of inertia of rotor ($\times 10^{-4}$ kg·m^2)	Without brake		0.15
	With brake		0.18
Recommended moment of inertia ratio of the load and the rotor Note)3			20 times or less
Rotary encoder specifications *3			23-bit Absolute
	Resolution per single turn		8388608

- **Brake specifications** (For details, refer to P.305)

(This brake will be released when it is energized. Do not use this for braking the motor in motion.)

Static friction torque (N·m)	0.39 or more
Engaging time (ms)	15 or less
Releasing time (ms) Note)4	20 or less
Exciting current (DC) (A)	0.30
Releasing voltage (DC) (V)	1 or more
Exciting voltage (DC) (V)	24±2.4

- **Permissible load** (For details, refer to P.304)

During assembly	Radial load P-direction (N)	147
	Thrust load A-direction (N)	88
	Thrust load B-direction (N)	117.6
During operation	Radial load P-direction (N)	68.6
	Thrust load A, B-direction (N)	58.8

- For details of Note)1 to Note)4, refer to P.303.
- Dimensions of Driver, refer to P.57.

*1 □□ in the motor part number represents the motor specifications.

*2 Basic type and RS485 communication type are "Position control type". Detail of model designation, refer to P.22.

*3 When using a rotary encoder as an incremental system (not using multi-turn data), do not connect a battery for absolute encoder.

Torque characteristics (at AC100 V of power voltage <Dotted line represents the torque at 10 % less supply voltage.>)

Without oil seal

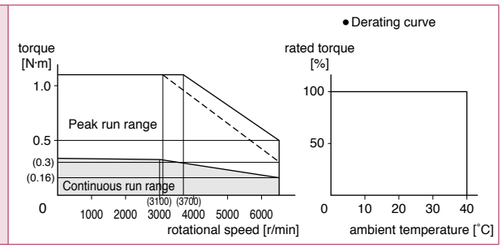

With oil seal

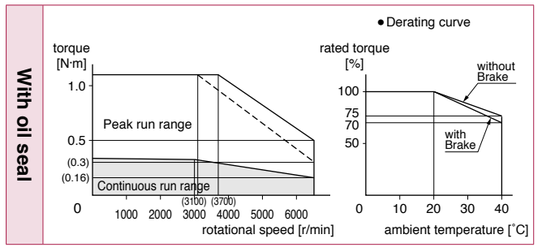

Dimensions

Motor specifications	Round shaft/ Key way, center tap shaft					
	without brake			with brake		
	without oil seal	with oil seal	with protective lip/ with oil seal	without oil seal	with oil seal	with protective lip/ with oil seal
Leadwire type (IP65)	P.135	P.135	P.135	P.136	P.136	P.136
Connector type (IP67)	P.137	P.137	P.137	P.138	P.138	P.138

<Cautions> Reduce the moment of inertia ratio if high speed response operation is required.
Dimensions are subject to change without notice. Contact us or a dealer for the latest information.
Read the Instruction Manual carefully and understand all precautions and remarks before using the products.

200 V MQMF 100 W [Middle inertia Flat type 60 mm sq.] IP65

Specifications

			AC200 V
Motor model *1			MQMF012L1□□
Applicable driver	Model No.	Multifunction type	MADLT05SF
		RS485 communication type *2	MADLN05SG
		Basic type *2	MADLN05SE
	Frame symbol		A-frame
Power supply capacity		(kVA)	0.5
Rated output		(W)	100
Rated torque		(N·m)	0.32
Continuous stall torque		(N·m)	0.33
Momentary Max. peak torque		(N·m)	1.11
Rated current		(A(rms))	1.1
Max. current		(A(o-p))	5.5
Regenerative brake frequency (times/min) Note)1	Without option		No limit Note)2
	DV0P4281		No limit Note)2
Rated rotational speed		(r/min)	3000
Max. rotational speed		(r/min)	6500
Moment of inertia of rotor ($\times 10^{-4}$ kg·m^2)	Without brake		0.15
	With brake		0.18
Recommended moment of inertia ratio of the load and the rotor Note)3			20 times or less
Rotary encoder specifications *3			23-bit Absolute
	Resolution per single turn		8388608

- **Brake specifications** (For details, refer to P.305)

(This brake will be released when it is energized. Do not use this for braking the motor in motion.)

Static friction torque (N·m)	0.39 or more
Engaging time (ms)	15 or less
Releasing time (ms) Note)4	20 or less
Exciting current (DC) (A)	0.30
Releasing voltage (DC) (V)	1 or more
Exciting voltage (DC) (V)	24±2.4

- **Permissible load** (For details, refer to P.304)

During assembly	Radial load P-direction (N)	147
	Thrust load A-direction (N)	88
	Thrust load B-direction (N)	117.6
During operation	Radial load P-direction (N)	68.6
	Thrust load A, B-direction (N)	58.8

- For details of Note)1 to Note)4, refer to P.303.
- Dimensions of Driver, refer to P.57.

*1 □□ in the motor part number represents the motor specifications.

*2 Basic type and RS485 communication type are "Position control type". Detail of model designation, refer to P.22.

*3 When using a rotary encoder as an incremental system (not using multi-turn data), do not connect a battery for absolute encoder.

Torque characteristics (at AC200 V of power voltage <Dotted line represents the torque at 10 % less supply voltage.>)

Without oil seal

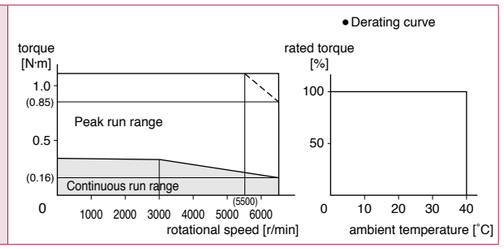

With oil seal

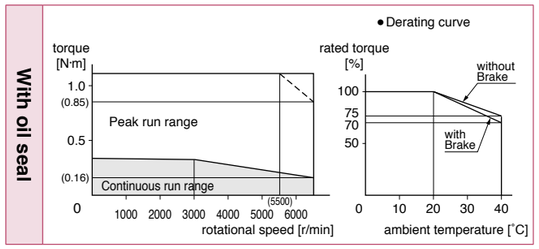

Dimensions

Motor specifications	Round shaft/ Key way, center tap shaft					
	without brake			with brake		
	without oil seal	with oil seal	with protective lip/ with oil seal	without oil seal	with oil seal	with protective lip/ with oil seal
Leadwire type (IP65)	P.135	P.135	P.135	P.136	P.136	P.136
Connector type (IP67)	P.137	P.137	P.137	P.138	P.138	P.138

<Cautions> Reduce the moment of inertia ratio if high speed response operation is required.
Dimensions are subject to change without notice. Contact us or a dealer for the latest information.
Read the Instruction Manual carefully and understand all precautions and remarks before using the products.

100 V MQMF 200 W [Middle inertia Flat type 80 mm sq.] IP65

Specifications

			AC100 V
Motor model *1			MQMF021L1□□
Applicable driver	Model No.	Multifunction type	MBDLT21SF
		RS485 communication type *2	MBDLN21SG
		Basic type *2	MBDLN21SE
	Frame symbol		B-frame
Power supply capacity (kVA)			0.5
Rated output (W)			200
Rated torque (N·m)			0.64
Continuous stall torque (N·m)			0.76
Momentary Max. peak torque (N·m)			2.23
Rated current (A(rms))			2.1
Max. current (A(o-p))			10.4
Regenerative brake frequency (times/min) Note)1		Without option	No limit Note)2
		DV0P4283	No limit Note)2
Rated rotational speed (r/min)			3000
Max. rotational speed (r/min)			6500
Moment of inertia of rotor ($\times 10^{-4}$ kg·m^2)		Without brake	0.50
		With brake	0.59
Recommended moment of inertia ratio of the load and the rotor Note)3			20 times or less
Rotary encoder specifications *3			23-bit Absolute
	Resolution per single turn		8388608

• Brake specifications (For details, refer to P.305)

(This brake will be released when it is energized. Do not use this for braking the motor in motion.)

Static friction torque (N·m)	1.6 or more
Engaging time (ms)	70 or less
Releasing time (ms) Note)4	20 or less
Exciting current (DC) (A)	0.36
Releasing voltage (DC) (V)	1 or more
Exciting voltage (DC) (V)	24±2.4

• Permissible load (For details, refer to P.304)

During assembly	Radial load P-direction (N)	392
	Thrust load A-direction (N)	147
	Thrust load B-direction (N)	196
During operation	Radial load P-direction (N)	245
	Thrust load A, B-direction (N)	98

- For details of Note)1 to Note)4, refer to P.303.
- Dimensions of Driver, refer to P.57.

*1 □□ in the motor part number represents the motor specifications.

*2 Basic type and RS485 communication type are "Position control type". Detail of model designation, refer to P.22.

*3 When using a rotary encoder as an incremental system (not using multi-turn data), do not connect a battery for absolute encoder.

Torque characteristics (at AC100 V of power voltage <Dotted line represents the torque at 10 % less supply voltage.>)

Without oil seal

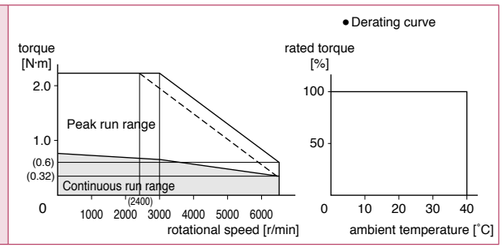

With oil seal

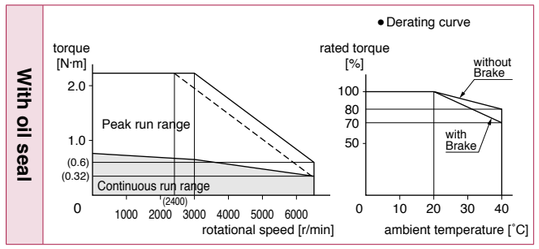

Dimensions

Motor specifications	Round shaft/ Key way, center tap shaft					
	without brake			with brake		
	without oil seal	with oil seal	with protective lip/ with oil seal	without oil seal	with oil seal	with protective lip/ with oil seal
Leadwire type (IP65)	P.139	P.139	P.139	P.140	P.140	P.140
Connector type (IP67)	P.141	P.141	P.141	P.142	P.142	P.142

<Cautions> Reduce the moment of inertia ratio if high speed response operation is required.
Dimensions are subject to change without notice. Contact us or a dealer for the latest information.
Read the Instruction Manual carefully and understand all precautions and remarks before using the products.

Specifications

			AC200 V
Motor model *1			MQMF022L1□□
Applicable driver	Model No.	Multifunction type	MADLT15SF
		RS485 communication type *2	MADLN15SG
		Basic type *2	MADLN15SE
	Frame symbol		A-frame
Power supply capacity (kVA)			0.5
Rated output (W)			200
Rated torque (N·m)			0.64
Continuous stall torque (N·m)			0.76
Momentary Max. peak torque (N·m)			2.23
Rated current (A(rms))			1.4
Max. current (A(o-p))			6.9
Regenerative brake frequency (times/min) Note)1		Without option	No limit Note)2
		DV0P4283	No limit Note)2
Rated rotational speed (r/min)			3000
Max. rotational speed (r/min)			6500
Moment of inertia of rotor ($\times 10^{-4}$ kg·m^2)		Without brake	0.50
		With brake	0.59
Recommended moment of inertia ratio of the load and the rotor Note)3			20 times or less
Rotary encoder specifications *3			23-bit Absolute
	Resolution per single turn		8388608

• Brake specifications (For details, refer to P.305)

(This brake will be released when it is energized. Do not use this for braking the motor in motion.)

Static friction torque (N·m)	1.6 or more
Engaging time (ms)	70 or less
Releasing time (ms) Note)4	20 or less
Exciting current (DC) (A)	0.36
Releasing voltage (DC) (V)	1 or more
Exciting voltage (DC) (V)	24±2.4

• Permissible load (For details, refer to P.304)

During assembly	Radial load P-direction (N)	392
	Thrust load A-direction (N)	147
	Thrust load B-direction (N)	196
During operation	Radial load P-direction (N)	245
	Thrust load A, B-direction (N)	98

- For details of Note)1 to Note)4, refer to P.303.
- Dimensions of Driver, refer to P.57.

*1 □□ in the motor part number represents the motor specifications.

*2 Basic type and RS485 communication type are "Position control type". Detail of model designation, refer to P.22.

*3 When using a rotary encoder as an incremental system (not using multi-turn data), do not connect a battery for absolute encoder.

Torque characteristics (at AC200 V of power voltage <Dotted line represents the torque at 10 % less supply voltage.>)

Without oil seal

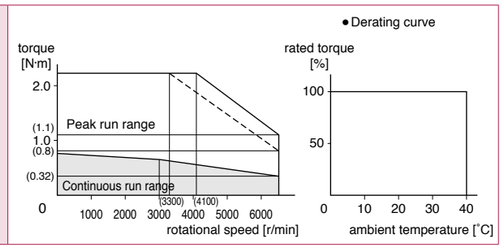

With oil seal

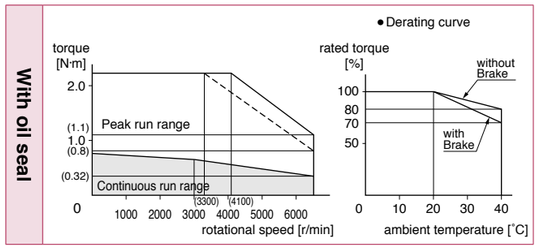

Dimensions

Motor specifications	Round shaft/ Key way, center tap shaft					
	without brake			with brake		
	without oil seal	with oil seal	with protective lip/ with oil seal	without oil seal	with oil seal	with protective lip/ with oil seal
Leadwire type (IP65)	P.139	P.139	P.139	P.140	P.140	P.140
Connector type (IP67)	P.141	P.141	P.141	P.142	P.142	P.142

<Cautions> Reduce the moment of inertia ratio if high speed response operation is required.
Dimensions are subject to change without notice. Contact us or a dealer for the latest information.
Read the Instruction Manual carefully and understand all precautions and remarks before using the products.

100 V MQMF 400 W [Middle inertia Flat type 80 mm sq.] IP65

Specifications

			AC100 V
Motor model *1			MQMF041L1□□
Applicable driver	Model No.	Multifunction type	MCDLT31SF
		RS485 communication type *2	MCDLN31SG
		Basic type *2	MCDLN31SE
	Frame symbol		C-frame
Power supply capacity		(kVA)	0.9
Rated output		(W)	400
Rated torque		(N·m)	1.27
Continuous stall torque		(N·m)	1.40
Momentary Max. peak torque		(N·m)	4.46
Rated current		(A(rms))	4.1
Max. current		(A(o-p))	20.3
Regenerative brake frequency (times/min) Note)1	Without option		No limit Note)2
	DV0P4282		No limit Note)2
Rated rotational speed		(r/min)	3000
Max. rotational speed		(r/min)	6500
Moment of inertia of rotor ($\times 10^{-4}$ kg·m^2)	Without brake		0.98
	With brake		1.06
Recommended moment of inertia ratio of the load and the rotor Note)3			20 times or less
Rotary encoder specifications *3			23-bit Absolute
	Resolution per single turn		8388608

- **Brake specifications** (For details, refer to P.305)

(This brake will be released when it is energized. Do not use this for braking the motor in motion.)

Static friction torque (N·m)	1.6 or more
Engaging time (ms)	70 or less
Releasing time (ms) Note)4	20 or less
Exciting current (DC) (A)	0.36
Releasing voltage (DC) (V)	1 or more
Exciting voltage (DC) (V)	24±2.4

- **Permissible load** (For details, refer to P.304)

During assembly	Radial load P-direction (N)	392
	Thrust load A-direction (N)	147
	Thrust load B-direction (N)	196
During operation	Radial load P-direction (N)	245
	Thrust load A, B-direction (N)	98

- For details of Note)1 to Note)4, refer to P.303.
- Dimensions of Driver, refer to P.58.

*1 □□ in the motor part number represents the motor specifications.

*2 Basic type and RS485 communication type are "Position control type". Detail of model designation, refer to P.22.

*3 When using a rotary encoder as an incremental system (not using multi-turn data), do not connect a battery for absolute encoder.

Torque characteristics (at AC100 V of power voltage <Dotted line represents the torque at 10 % less supply voltage.>)

Without oil seal

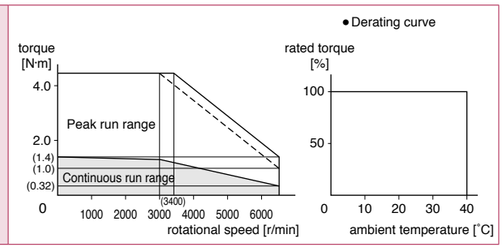

With oil seal

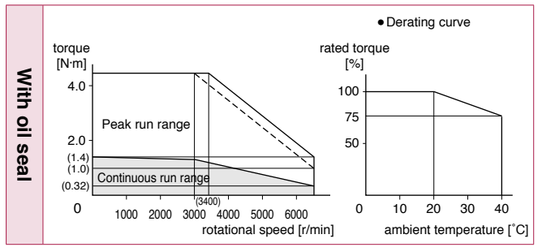

Dimensions

Motor specifications	Round shaft/ Key way, center tap shaft					
	without brake			with brake		
	without oil seal	with oil seal	with protective lip/ with oil seal	without oil seal	with oil seal	with protective lip/ with oil seal
Leadwire type (IP65)	P.143	P.143	P.143	P.144	P.144	P.144
Connector type (IP67)	P.145	P.145	P.145	P.146	P.146	P.146

<Cautions> Reduce the moment of inertia ratio if high speed response operation is required.
Dimensions are subject to change without notice. Contact us or a dealer for the latest information.
Read the Instruction Manual carefully and understand all precautions and remarks before using the products.

200 V MQMF 400 W [Middle inertia Flat type 80 mm sq.] IP65

Specifications

			AC200 V
Motor model *1			MQMF042L1□□
Applicable driver	Model No.	Multifunction type	MBDLT25SF
		RS485 communication type *2	MBDLN25SG
		Basic type *2	MBDLN25SE
	Frame symbol		B-frame
Power supply capacity		(kVA)	0.9
Rated output		(W)	400
Rated torque		(N·m)	1.27
Continuous stall torque		(N·m)	1.40
Momentary Max. peak torque		(N·m)	4.46
Rated current		(A(rms))	2.1
Max. current		(A(o-p))	10.4
Regenerative brake frequency (times/min) Note)1	Without option		No limit Note)2
	DV0P4283		No limit Note)2
Rated rotational speed		(r/min)	3000
Max. rotational speed		(r/min)	6500
Moment of inertia of rotor ($\times 10^{-4}$ kg·m^2)	Without brake		0.98
	With brake		1.06
Recommended moment of inertia ratio of the load and the rotor Note)3			20 times or less
Rotary encoder specifications *3			23-bit Absolute
	Resolution per single turn		8388608

- **Brake specifications** (For details, refer to P.305)

(This brake will be released when it is energized. Do not use this for braking the motor in motion.)

Static friction torque (N·m)	1.6 or more
Engaging time (ms)	70 or less
Releasing time (ms) Note)4	20 or less
Exciting current (DC) (A)	0.36
Releasing voltage (DC) (V)	1 or more
Exciting voltage (DC) (V)	24±2.4

- **Permissible load** (For details, refer to P.304)

During assembly	Radial load P-direction (N)	392
	Thrust load A-direction (N)	147
	Thrust load B-direction (N)	196
During operation	Radial load P-direction (N)	245
	Thrust load A, B-direction (N)	98

- For details of Note)1 to Note)4, refer to P.303.
- Dimensions of Driver, refer to P.57.

*1 □□ in the motor part number represents the motor specifications.

*2 Basic type and RS485 communication type are "Position control type". Detail of model designation, refer to P.22.

*3 When using a rotary encoder as an incremental system (not using multi-turn data), do not connect a battery for absolute encoder.

Torque characteristics (at AC200 V of power voltage <Dotted line represents the torque at 10 % less supply voltage.>)

Without oil seal

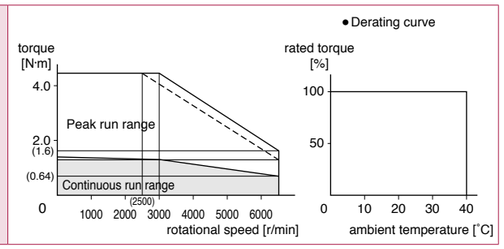

With oil seal

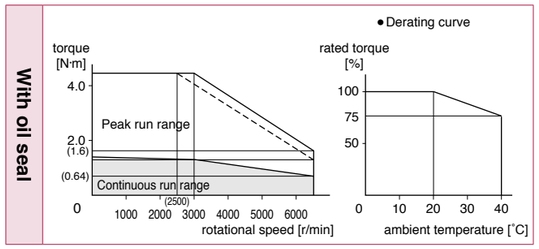

Dimensions

Motor specifications	Round shaft/ Key way, center tap shaft					
	without brake			with brake		
	without oil seal	with oil seal	with protective lip/ with oil seal	without oil seal	with oil seal	with protective lip/ with oil seal
Leadwire type (IP65)	P.143	P.143	P.143	P.144	P.144	P.144
Connector type (IP67)	P.145	P.145	P.145	P.146	P.146	P.146

<Cautions> Reduce the moment of inertia ratio if high speed response operation is required.
Dimensions are subject to change without notice. Contact us or a dealer for the latest information.
Read the Instruction Manual carefully and understand all precautions and remarks before using the products.

100 V MHMF 50 W [High inertia 40 mm sq.] IP65

Specifications

			AC100 V
Motor model *1			MHMF5AZL1□□
Applicable driver	Model No.	Multifunction type	MADLT01SF
		RS485 communication type *2	MADLN01SG
		Basic type *2	MADLN01SE
	Frame symbol		A-frame
Power supply capacity		(kVA)	0.4
Rated output		(W)	50
Rated torque		(N·m)	0.16
Continuous stall torque		(N·m)	0.18
Momentary Max. peak torque		(N·m)	0.56
Rated current		(A(rms))	1.1
Max. current		(A(o-p))	5.5
Regenerative brake frequency (times/min) Note)1	Without option		No limit Note)2
	DV0P4280		No limit Note)2
Rated rotational speed		(r/min)	3000
Max. rotational speed		(r/min)	6500
Moment of inertia of rotor (×10^{-4} kg·m^2)	Without brake		0.038
	With brake		0.042
Recommended moment of inertia ratio of the load and the rotor Note)3			30 times or less
Rotary encoder specifications *3			23-bit Absolute
	Resolution per single turn		8388608

- **Brake specifications** (For details, refer to P.305)

(This brake will be released when it is energized. Do not use this for braking the motor in motion.)

Static friction torque (N·m)	0.38 or more
Engaging time (ms)	35 or less
Releasing time (ms) Note)4	20 or less
Exciting current (DC) (A)	0.30
Releasing voltage (DC) (V)	1 or more
Exciting voltage (DC) (V)	24±2.4

- **Permissible load** (For details, refer to P.304)

During assembly	Radial load P-direction (N)	147
	Thrust load A-direction (N)	88
	Thrust load B-direction (N)	117.6
During operation	Radial load P-direction (N)	68.6
	Thrust load A, B-direction (N)	49

- For details of Note)1 to Note)4, refer to P.303.
- Dimensions of Driver, refer to P.57.

*1 □□ in the motor part number represents the motor specifications.

*2 Basic type and RS485 communication type are "Position control type". Detail of model designation, refer to P.22.

*3 When using a rotary encoder as an incremental system (not using multi-turn data), do not connect a battery for absolute encoder.

Torque characteristics (at AC100 V of power voltage <Dotted line represents the torque at 10 % less supply voltage.>)

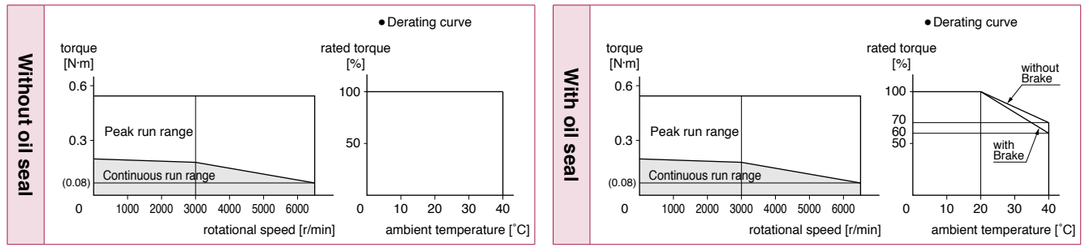

Dimensions

Motor specifications	Round shaft/ Key way, center tap shaft					
	without brake			with brake		
	without oil seal	with oil seal	with protective lip/ with oil seal	without oil seal	with oil seal	with protective lip/ with oil seal
Leadwire type (IP65)	P.147	P.147	P.147	P.148	P.148	P.148
Connector type (IP67)	P.149	P.149	P.149	P.150	P.150	P.150

<Cautions> Reduce the moment of inertia ratio if high speed response operation is required.
Dimensions are subject to change without notice. Contact us or a dealer for the latest information.
Read the Instruction Manual carefully and understand all precautions and remarks before using the products.

200 V MHMF 50 W [High inertia 40 mm sq.] IP65

Specifications

			AC200 V
Motor model *1			MHMF5AZL1□□
Applicable driver	Model No.	Multifunction type	MADLT05SF
		RS485 communication type *2	MADLN05SG
		Basic type *2	MADLN05SE
	Frame symbol		A-frame
Power supply capacity		(kVA)	0.5
Rated output		(W)	50
Rated torque		(N·m)	0.16
Continuous stall torque		(N·m)	0.18
Momentary Max. peak torque		(N·m)	0.56
Rated current		(A(rms))	1.1
Max. current		(A(o-p))	5.5
Regenerative brake frequency (times/min) Note)1	Without option		No limit Note)2
	DV0P4281		No limit Note)2
Rated rotational speed		(r/min)	3000
Max. rotational speed		(r/min)	6500
Moment of inertia of rotor (×10^{-4} kg·m^2)	Without brake		0.038
	With brake		0.042
Recommended moment of inertia ratio of the load and the rotor Note)3			30 times or less
Rotary encoder specifications *3			23-bit Absolute
	Resolution per single turn		8388608

- **Brake specifications** (For details, refer to P.305)

(This brake will be released when it is energized. Do not use this for braking the motor in motion.)

Static friction torque (N·m)	0.38 or more
Engaging time (ms)	35 or less
Releasing time (ms) Note)4	20 or less
Exciting current (DC) (A)	0.30
Releasing voltage (DC) (V)	1 or more
Exciting voltage (DC) (V)	24±2.4

- **Permissible load** (For details, refer to P.304)

During assembly	Radial load P-direction (N)	147
	Thrust load A-direction (N)	88
	Thrust load B-direction (N)	117.6
During operation	Radial load P-direction (N)	68.6
	Thrust load A, B-direction (N)	49

- For details of Note)1 to Note)4, refer to P.303.
- Dimensions of Driver, refer to P.57.

*1 □□ in the motor part number represents the motor specifications.

*2 Basic type and RS485 communication type are "Position control type". Detail of model designation, refer to P.22.

*3 When using a rotary encoder as an incremental system (not using multi-turn data), do not connect a battery for absolute encoder.

Torque characteristics (at AC200 V of power voltage <Dotted line represents the torque at 10 % less supply voltage.>)

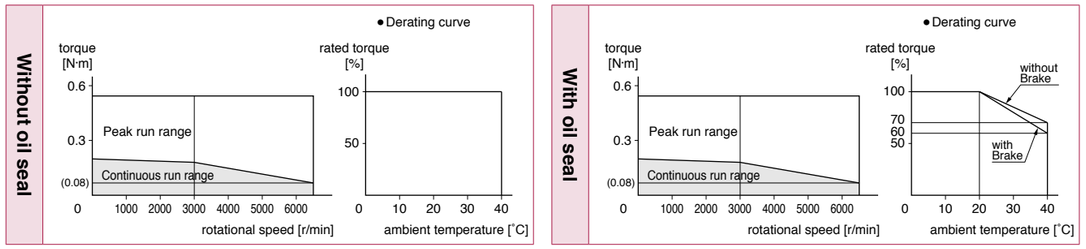

Dimensions

Motor specifications	Round shaft/ Key way, center tap shaft					
	without brake			with brake		
	without oil seal	with oil seal	with protective lip/ with oil seal	without oil seal	with oil seal	with protective lip/ with oil seal
Leadwire type (IP65)	P.147	P.147	P.147	P.148	P.148	P.148
Connector type (IP67)	P.149	P.149	P.149	P.150	P.150	P.150

<Cautions> Reduce the moment of inertia ratio if high speed response operation is required.
Dimensions are subject to change without notice. Contact us or a dealer for the latest information.
Read the Instruction Manual carefully and understand all precautions and remarks before using the products.

100 V MHMF 100 W [High inertia 40 mm sq.] IP65

Specifications

			AC100 V
Motor model *1			MHMF011L1□□
Applicable driver	Model No.	Multifunction type	MADLT11SF
		RS485 communication type *2	MADLN11SG
		Basic type *2	MADLN11SE
	Frame symbol		A-frame
Power supply capacity		(kVA)	0.4
Rated output		(W)	100
Rated torque		(N·m)	0.32
Continuous stall torque		(N·m)	0.33
Momentary Max. peak torque		(N·m)	1.11
Rated current		(A(rms))	1.6
Max. current		(A(o-p))	7.9
Regenerative brake frequency (times/min) Note)1	Without option		No limit Note)2
	DV0P4280		No limit Note)2
Rated rotational speed		(r/min)	3000
Max. rotational speed		(r/min)	6500
Moment of inertia of rotor ($\times 10^{-4}$ kg·m^2)	Without brake		0.071
	With brake		0.074
Recommended moment of inertia ratio of the load and the rotor Note)3			30 times or less
Rotary encoder specifications *3			23-bit Absolute
	Resolution per single turn		8388608

- **Brake specifications** (For details, refer to P.305)

(This brake will be released when it is energized. Do not use this for braking the motor in motion.)

Static friction torque (N·m)	0.38 or more
Engaging time (ms)	35 or less
Releasing time (ms) Note)4	20 or less
Exciting current (DC) (A)	0.30
Releasing voltage (DC) (V)	1 or more
Exciting voltage (DC) (V)	24±2.4

- **Permissible load** (For details, refer to P.304)

During assembly	Radial load P-direction (N)	147
	Thrust load A-direction (N)	88
	Thrust load B-direction (N)	117.6
During operation	Radial load P-direction (N)	68.6
	Thrust load A, B-direction (N)	58.8

- For details of Note)1 to Note)4, refer to P.303.
- Dimensions of Driver, refer to P.57.

*1 □□ in the motor part number represents the motor specifications.

*2 Basic type and RS485 communication type are "Position control type". Detail of model designation, refer to P.22.

*3 When using a rotary encoder as an incremental system (not using multi-turn data), do not connect a battery for absolute encoder.

Torque characteristics (at AC100 V of power voltage <Dotted line represents the torque at 10 % less supply voltage.>)

Without oil seal

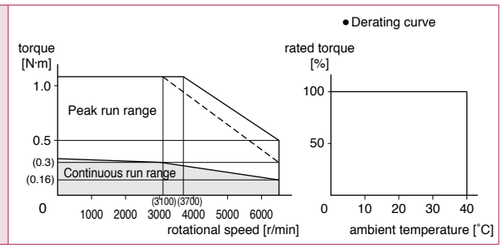

With oil seal

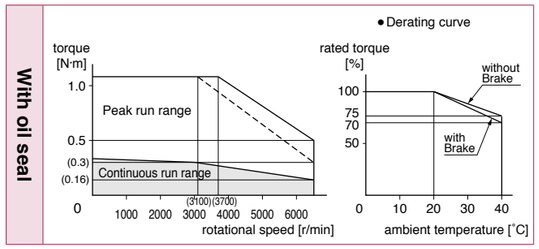

Dimensions

Motor specifications	Round shaft/ Key way, center tap shaft					
	without brake			with brake		
	without oil seal	with oil seal	with protective lip/ with oil seal	without oil seal	with oil seal	with protective lip/ with oil seal
Leadwire type (IP65)	P.151	P.151	P.151	P.152	P.152	P.152
Connector type (IP67)	P.153	P.153	P.153	P.154	P.154	P.154

<Cautions> Reduce the moment of inertia ratio if high speed response operation is required.
Dimensions are subject to change without notice. Contact us or a dealer for the latest information.
Read the Instruction Manual carefully and understand all precautions and remarks before using the products.

200 V MHMF 100 W [High inertia 40 mm sq.] IP65

Specifications

			AC200 V
Motor model *1			MHMF012L1□□
Applicable driver	Model No.	Multifunction type	MADLT05SF
		RS485 communication type *2	MADLN05SG
		Basic type *2	MADLN05SE
	Frame symbol		A-frame
Power supply capacity		(kVA)	0.5
Rated output		(W)	100
Rated torque		(N·m)	0.32
Continuous stall torque		(N·m)	0.33
Momentary Max. peak torque		(N·m)	1.11
Rated current		(A(rms))	1.1
Max. current		(A(o-p))	5.5
Regenerative brake frequency (times/min) Note)1	Without option		No limit Note)2
	DV0P4281		No limit Note)2
Rated rotational speed		(r/min)	3000
Max. rotational speed		(r/min)	6500
Moment of inertia of rotor ($\times 10^{-4}$ kg·m^2)	Without brake		0.071
	With brake		0.074
Recommended moment of inertia ratio of the load and the rotor Note)3			30 times or less
Rotary encoder specifications *3			23-bit Absolute
	Resolution per single turn		8388608

- **Brake specifications** (For details, refer to P.305)

(This brake will be released when it is energized. Do not use this for braking the motor in motion.)

Static friction torque (N·m)	0.38 or more
Engaging time (ms)	35 or less
Releasing time (ms) Note)4	20 or less
Exciting current (DC) (A)	0.30
Releasing voltage (DC) (V)	1 or more
Exciting voltage (DC) (V)	24±2.4

- **Permissible load** (For details, refer to P.304)

During assembly	Radial load P-direction (N)	147
	Thrust load A-direction (N)	88
	Thrust load B-direction (N)	117.6
During operation	Radial load P-direction (N)	68.6
	Thrust load A, B-direction (N)	58.8

- For details of Note)1 to Note)4, refer to P.303.
- Dimensions of Driver, refer to P.57.

*1 □□ in the motor part number represents the motor specifications.

*2 Basic type and RS485 communication type are "Position control type". Detail of model designation, refer to P.22.

*3 When using a rotary encoder as an incremental system (not using multi-turn data), do not connect a battery for absolute encoder.

Torque characteristics (at AC200 V of power voltage <Dotted line represents the torque at 10 % less supply voltage.>)

Without oil seal

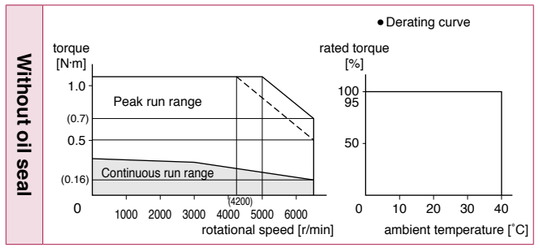

With oil seal

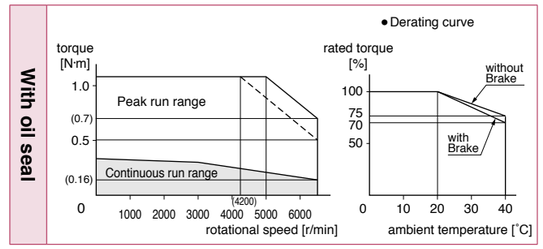

Dimensions

Motor specifications	Round shaft/ Key way, center tap shaft					
	without brake			with brake		
	without oil seal	with oil seal	with protective lip/ with oil seal	without oil seal	with oil seal	with protective lip/ with oil seal
Leadwire type (IP65)	P.151	P.151	P.151	P.152	P.152	P.152
Connector type (IP67)	P.153	P.153	P.153	P.154	P.154	P.154

<Cautions> Reduce the moment of inertia ratio if high speed response operation is required.
Dimensions are subject to change without notice. Contact us or a dealer for the latest information.
Read the Instruction Manual carefully and understand all precautions and remarks before using the products.

100 V MHMF 200 W [High inertia 60 mm sq.] IP65

Specifications

			AC100 V
Motor model *1			MHMF021L1□□
Applicable driver	Model No.	Multifunction type	MBDLT21SF
		RS485 communication type *2	MBDLN21SG
		Basic type *2	MBDLN21SE
	Frame symbol		B-frame
Power supply capacity		(kVA)	0.5
Rated output		(W)	200
Rated torque		(N·m)	0.64
Continuous stall torque		(N·m)	0.76
Momentary Max. peak torque		(N·m)	2.23
Rated current		(A(rms))	2.1
Max. current		(A(o-p))	10.4
Regenerative brake frequency (times/min) Note)1	Without option		No limit Note)2
	DV0P4283		No limit Note)2
Rated rotational speed		(r/min)	3000
Max. rotational speed		(r/min)	6500
Moment of inertia of rotor ($\times 10^{-4}$ kg·m^2)	Without brake		0.29
	With brake		0.31
Recommended moment of inertia ratio of the load and the rotor Note)3			30 times or less
Rotary encoder specifications *3			23-bit Absolute
	Resolution per single turn		8388608

- **Brake specifications** (For details, refer to P.305)

(This brake will be released when it is energized. Do not use this for braking the motor in motion.)

Static friction torque (N·m)	1.6 or more
Engaging time (ms)	50 or less
Releasing time (ms) Note)4	20 or less
Exciting current (DC) (A)	0.36
Releasing voltage (DC) (V)	1 or more
Exciting voltage (DC) (V)	24±2.4

- **Permissible load** (For details, refer to P.304)

During assembly	Radial load P-direction (N)	392
	Thrust load A-direction (N)	147
	Thrust load B-direction (N)	196
During operation	Radial load P-direction (N)	245
	Thrust load A, B-direction (N)	98

- For details of Note)1 to Note)4, refer to P.303.
- Dimensions of Driver, refer to P.57.

*1 □□ in the motor part number represents the motor specifications.

*2 Basic type and RS485 communication type are "Position control type". Detail of model designation, refer to P.22.

*3 When using a rotary encoder as an incremental system (not using multi-turn data), do not connect a battery for absolute encoder.

Torque characteristics (at AC100 V of power voltage <Dotted line represents the torque at 10 % less supply voltage.>)

Without oil seal

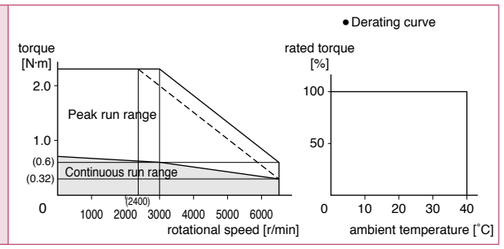

With oil seal

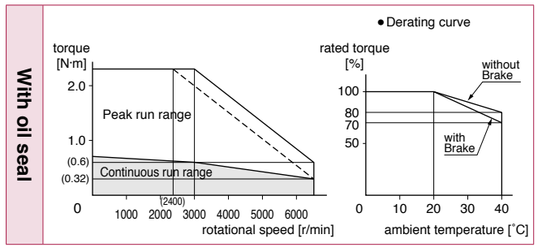

Dimensions

Motor specifications	Round shaft/ Key way, center tap shaft					
	without brake			with brake		
	without oil seal	with oil seal	with protective lip/ with oil seal	without oil seal	with oil seal	with protective lip/ with oil seal
Leadwire type (IP65)	P.155	P.155	P.155	P.156	P.156	P.156
Connector type (IP67)	P.157	P.157	P.157	P.158	P.158	P.158

<Cautions> Reduce the moment of inertia ratio if high speed response operation is required.
Dimensions are subject to change without notice. Contact us or a dealer for the latest information.
Read the Instruction Manual carefully and understand all precautions and remarks before using the products.

200 V MHMF 200 W [High inertia 60 mm sq.] IP65

Specifications

			AC200 V
Motor model *1			MHMF022L1□□
Applicable driver	Model No.	Multifunction type	MADLT15SF
		RS485 communication type *2	MADLN15SG
		Basic type *2	MADLN15SE
	Frame symbol		A-frame
Power supply capacity		(kVA)	0.5
Rated output		(W)	200
Rated torque		(N·m)	0.64
Continuous stall torque		(N·m)	0.76
Momentary Max. peak torque		(N·m)	2.23
Rated current		(A(rms))	1.4
Max. current		(A(o-p))	6.9
Regenerative brake frequency (times/min) Note)1	Without option		No limit Note)2
	DV0P4283		No limit Note)2
Rated rotational speed		(r/min)	3000
Max. rotational speed		(r/min)	6500
Moment of inertia of rotor ($\times 10^{-4}$ kg·m^2)	Without brake		0.29
	With brake		0.31
Recommended moment of inertia ratio of the load and the rotor Note)3			30 times or less
Rotary encoder specifications *3			23-bit Absolute
	Resolution per single turn		8388608

- **Brake specifications** (For details, refer to P.305)

(This brake will be released when it is energized. Do not use this for braking the motor in motion.)

Static friction torque (N·m)	1.6 or more
Engaging time (ms)	50 or less
Releasing time (ms) Note)4	20 or less
Exciting current (DC) (A)	0.36
Releasing voltage (DC) (V)	1 or more
Exciting voltage (DC) (V)	24±2.4

- **Permissible load** (For details, refer to P.304)

During assembly	Radial load P-direction (N)	392
	Thrust load A-direction (N)	147
	Thrust load B-direction (N)	196
During operation	Radial load P-direction (N)	245
	Thrust load A, B-direction (N)	98

- For details of Note)1 to Note)4, refer to P.303.
- Dimensions of Driver, refer to P.57.

*1 □□ in the motor part number represents the motor specifications.

*2 Basic type and RS485 communication type are "Position control type". Detail of model designation, refer to P.22.

*3 When using a rotary encoder as an incremental system (not using multi-turn data), do not connect a battery for absolute encoder.

Torque characteristics (at AC200 V of power voltage <Dotted line represents the torque at 10 % less supply voltage.>)

Without oil seal

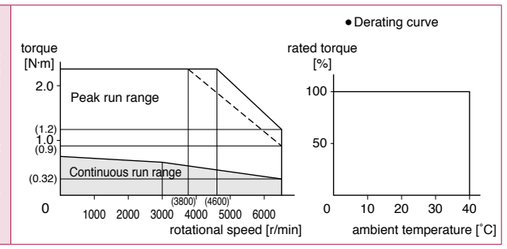

With oil seal

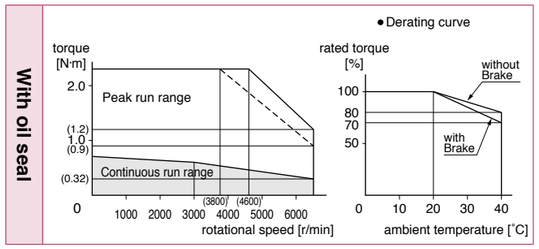

Dimensions

Motor specifications	Round shaft/ Key way, center tap shaft					
	without brake			with brake		
	without oil seal	with oil seal	with protective lip/ with oil seal	without oil seal	with oil seal	with protective lip/ with oil seal
Leadwire type (IP65)	P.155	P.155	P.155	P.156	P.156	P.156
Connector type (IP67)	P.157	P.157	P.157	P.158	P.158	P.158

<Cautions> Reduce the moment of inertia ratio if high speed response operation is required.
Dimensions are subject to change without notice. Contact us or a dealer for the latest information.
Read the Instruction Manual carefully and understand all precautions and remarks before using the products.

100 V MHMF 400 W [High inertia 60 mm sq.] IP65

Specifications

			AC100 V
Motor model *1			MHMF041L1□□
Applicable driver	Model No.	Multifunction type	MCDLT31SF
		RS485 communication type *2	MCDLN31SG
		Basic type *2	MCDLN31SE
	Frame symbol		C-frame
Power supply capacity		(kVA)	0.9
Rated output		(W)	400
Rated torque		(N·m)	1.27
Continuous stall torque		(N·m)	1.40
Momentary Max. peak torque		(N·m)	4.46
Rated current		(A(rms))	4.1
Max. current		(A(o-p))	20.3
Regenerative brake frequency (times/min) Note)1	Without option		No limit Note)2
	DV0P4282		No limit Note)2
Rated rotational speed		(r/min)	3000
Max. rotational speed		(r/min)	6500
Moment of inertia of rotor ($\times 10^{-4}$ kg·m^2)	Without brake		0.56
	With brake		0.58
Recommended moment of inertia ratio of the load and the rotor Note)3			30 times or less
Rotary encoder specifications *3			23-bit Absolute
	Resolution per single turn		8388608

- **Brake specifications** (For details, refer to P.305)

(This brake will be released when it is energized. Do not use this for braking the motor in motion.)

Static friction torque (N·m)	1.6 or more
Engaging time (ms)	50 or less
Releasing time (ms) Note)4	20 or less
Exciting current (DC) (A)	0.36
Releasing voltage (DC) (V)	1 or more
Exciting voltage (DC) (V)	24±2.4

- **Permissible load** (For details, refer to P.304)

During assembly	Radial load P-direction (N)	392
	Thrust load A-direction (N)	147
	Thrust load B-direction (N)	196
During operation	Radial load P-direction (N)	245
	Thrust load A, B-direction (N)	98

- For details of Note)1 to Note)4, refer to P.303.
- Dimensions of Driver, refer to P.58.

*1 □□ in the motor part number represents the motor specifications.

*2 Basic type and RS485 communication type are "Position control type". Detail of model designation, refer to P.22.

*3 When using a rotary encoder as an incremental system (not using multi-turn data), do not connect a battery for absolute encoder.

Torque characteristics (at AC100 V of power voltage <Dotted line represents the torque at 10 % less supply voltage.>)

Without oil seal

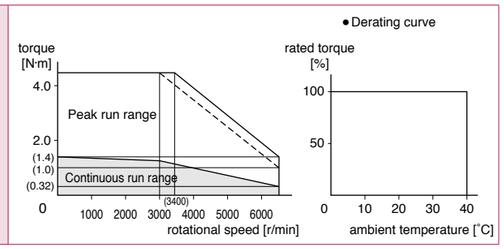

With oil seal

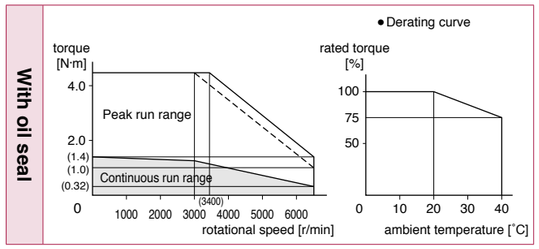

Dimensions

Motor specifications	Round shaft/ Key way, center tap shaft					
	without brake			with brake		
	without oil seal	with oil seal	with protective lip/ with oil seal	without oil seal	with oil seal	with protective lip/ with oil seal
Leadwire type (IP65)	P.159	P.159	P.159	P.160	P.160	P.160
Connector type (IP67)	P.161	P.161	P.161	P.162	P.162	P.162

<Cautions> Reduce the moment of inertia ratio if high speed response operation is required.
Dimensions are subject to change without notice. Contact us or a dealer for the latest information.
Read the Instruction Manual carefully and understand all precautions and remarks before using the products.

200 V MHMF 400 W [High inertia 60 mm sq.] IP65

Specifications

			AC200 V
Motor model *1			MHMF042L1□□
Applicable driver	Model No.	Multifunction type	MBDLT25SF
		RS485 communication type *2	MBDLN25SG
		Basic type *2	MBDLN25SE
	Frame symbol		B-frame
Power supply capacity		(kVA)	0.9
Rated output		(W)	400
Rated torque		(N·m)	1.27
Continuous stall torque		(N·m)	1.40
Momentary Max. peak torque		(N·m)	4.46
Rated current		(A(rms))	2.1
Max. current		(A(o-p))	10.4
Regenerative brake frequency (times/min) Note)1	Without option		No limit Note)2
	DV0P4283		No limit Note)2
Rated rotational speed		(r/min)	3000
Max. rotational speed		(r/min)	6500
Moment of inertia of rotor ($\times 10^{-4}$ kg·m^2)	Without brake		0.56
	With brake		0.58
Recommended moment of inertia ratio of the load and the rotor Note)3			30 times or less
Rotary encoder specifications *3			23-bit Absolute
	Resolution per single turn		8388608

- **Brake specifications** (For details, refer to P.305)

(This brake will be released when it is energized. Do not use this for braking the motor in motion.)

Static friction torque (N·m)	1.6 or more
Engaging time (ms)	50 or less
Releasing time (ms) Note)4	20 or less
Exciting current (DC) (A)	0.36
Releasing voltage (DC) (V)	1 or more
Exciting voltage (DC) (V)	24±2.4

- **Permissible load** (For details, refer to P.304)

During assembly	Radial load P-direction (N)	392
	Thrust load A-direction (N)	147
	Thrust load B-direction (N)	196
During operation	Radial load P-direction (N)	245
	Thrust load A, B-direction (N)	98

- For details of Note)1 to Note)4, refer to P.303.
- Dimensions of Driver, refer to P.57.

*1 □□ in the motor part number represents the motor specifications.

*2 Basic type and RS485 communication type are "Position control type". Detail of model designation, refer to P.22.

*3 When using a rotary encoder as an incremental system (not using multi-turn data), do not connect a battery for absolute encoder.

Torque characteristics (at AC200 V of power voltage <Dotted line represents the torque at 10 % less supply voltage.>)

Without oil seal

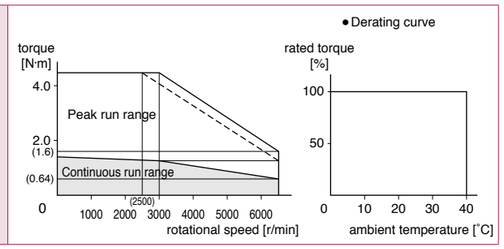

With oil seal

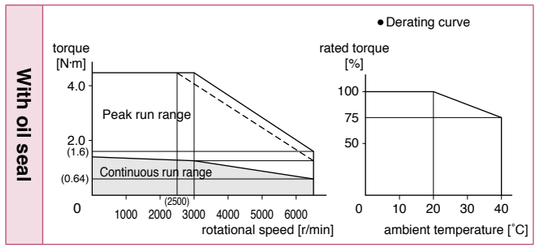

Dimensions

Motor specifications	Round shaft/ Key way, center tap shaft					
	without brake			with brake		
	without oil seal	with oil seal	with protective lip/ with oil seal	without oil seal	with oil seal	with protective lip/ with oil seal
Leadwire type (IP65)	P.159	P.159	P.159	P.160	P.160	P.160
Connector type (IP67)	P.161	P.161	P.161	P.162	P.162	P.162

<Cautions> Reduce the moment of inertia ratio if high speed response operation is required.
Dimensions are subject to change without notice. Contact us or a dealer for the latest information.
Read the Instruction Manual carefully and understand all precautions and remarks before using the products.

200 V MHMF 750 W [High inertia 80 mm sq.] IP65

Specifications

			AC200 V
Motor model *1			MHMF082L1□□
Applicable driver	Model No.	Multifunction type	MCDLT35SF
		RS485 communication type *2	MCDLN35SG
		Basic type *2	MCDLN35SE
	Frame symbol		C-frame
Power supply capacity		(kVA)	1.8
Rated output		(W)	750
Rated torque		(N·m)	2.39
Continuous stall torque		(N·m)	2.86
Momentary Max. peak torque		(N·m)	8.36
Rated current		(A(rms))	3.8
Max. current		(A(o-p))	18.8
Regenerative brake frequency (times/min) Note)1	Without option		No limit Note)2
	DV0P4283		No limit Note)2
Rated rotational speed		(r/min)	3000
Max. rotational speed		(r/min)	6000
Moment of inertia of rotor ($\times 10^{-4}$ kg·m^2)	Without brake		1.56
	With brake		1.66
Recommended moment of inertia ratio of the load and the rotor Note)3			20 times or less
Rotary encoder specifications *3			23-bit Absolute
	Resolution per single turn		8388608

- **Brake specifications** (For details, refer to P.305)

(This brake will be released when it is energized. Do not use this for braking the motor in motion.)

Static friction torque (N·m)	3.8 or more
Engaging time (ms)	70 or less
Releasing time (ms) Note)4	20 or less
Exciting current (DC) (A)	0.42
Releasing voltage (DC) (V)	1 or more
Exciting voltage (DC) (V)	24±2.4

- **Permissible load** (For details, refer to P.304)

During assembly	Radial load P-direction (N)	686
	Thrust load A-direction (N)	294
	Thrust load B-direction (N)	392
During operation	Radial load P-direction (N)	392
	Thrust load A, B-direction (N)	147

- For details of Note)1 to Note)4, refer to P.303.
- Dimensions of Driver, refer to P.58.

*1 □□ in the motor part number represents the motor specifications.

*2 Basic type and RS485 communication type are "Position control type". Detail of model designation, refer to P.22.

*3 When using a rotary encoder as an incremental system (not using multi-turn data), do not connect a battery for absolute encoder.

Torque characteristics (at AC200 V of power voltage <Dotted line represents the torque at 10 % less supply voltage.>)

Without oil seal

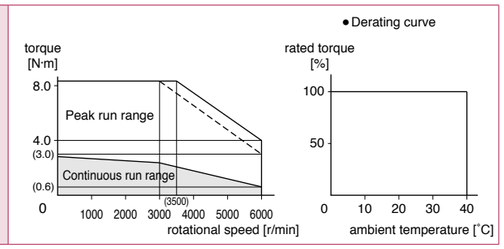

With oil seal

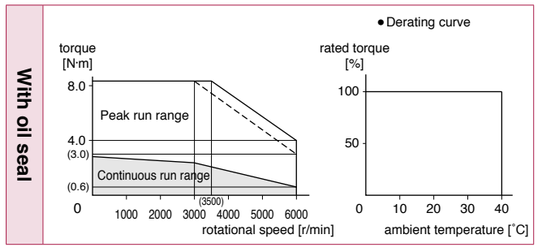

Dimensions

Motor specifications	Round shaft/ Key way, center tap shaft					
	without brake			with brake		
	without oil seal	with oil seal	with protective lip/ with oil seal	without oil seal	with oil seal	with protective lip/ with oil seal
Leadwire type (IP65)	P.163	P.163	P.163	P.164	P.164	P.164
Connector type (IP67)	P.165	P.165	P.165	P.166	P.166	P.166

<Cautions> Reduce the moment of inertia ratio if high speed response operation is required.
Dimensions are subject to change without notice. Contact us or a dealer for the latest information.
Read the Instruction Manual carefully and understand all precautions and remarks before using the products.

200 V MHMF 1000 W [High inertia 80 mm sq.] IP65

Specifications

			AC200 V
Motor model *1			MHMF092L1□□
Applicable driver	Model No.	Multifunction type	MDDLT55SF
		RS485 communication type *2	MDDLN55SG
		Basic type *2	MDDLN55SE
	Frame symbol		D-frame
Power supply capacity		(kVA)	2.4
Rated output		(W)	1000
Rated torque		(N·m)	3.18
Continuous stall torque		(N·m)	3.34
Momentary Max. peak torque		(N·m)	11.1
Rated current		(A(rms))	5.7
Max. current		(A(o-p))	28.2
Regenerative brake frequency (times/min) Note)1	Without option		No limit Note)2
	DV0P4284		No limit Note)2
Rated rotational speed		(r/min)	3000
Max. rotational speed		(r/min)	6000
Moment of inertia of rotor ($\times 10^{-4}$ kg·m^2)	Without brake		2.03
	With brake		2.13
Recommended moment of inertia ratio of the load and the rotor Note)3			15 times or less
Rotary encoder specifications *3			23-bit Absolute
	Resolution per single turn		8388608

- **Brake specifications** (For details, refer to P.305)

(This brake will be released when it is energized. Do not use this for braking the motor in motion.)

Static friction torque (N·m)	3.8 or more
Engaging time (ms)	70 or less
Releasing time (ms) Note)4	20 or less
Exciting current (DC) (A)	0.42
Releasing voltage (DC) (V)	1 or more
Exciting voltage (DC) (V)	24±2.4

- **Permissible load** (For details, refer to P.304)

During assembly	Radial load P-direction (N)	686
	Thrust load A-direction (N)	294
	Thrust load B-direction (N)	392
During operation	Radial load P-direction (N)	392
	Thrust load A, B-direction (N)	147

- For details of Note)1 to Note)4, refer to P.303.
- Dimensions of Driver, refer to P.58.

*1 □□ in the motor part number represents the motor specifications.

*2 Basic type and RS485 communication type are "Position control type". Detail of model designation, refer to P.22.

*3 When using a rotary encoder as an incremental system (not using multi-turn data), do not connect a battery for absolute encoder.

Torque characteristics (at AC200 V of power voltage <Dotted line represents the torque at 10 % less supply voltage.>)

Without oil seal

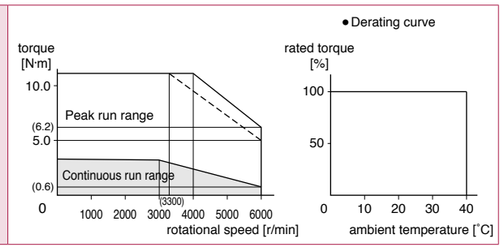

With oil seal

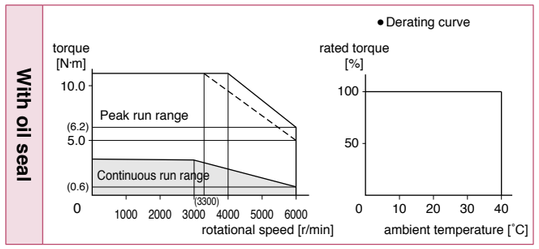

Dimensions

Motor specifications	Round shaft/ Key way, center tap shaft					
	without brake			with brake		
	without oil seal	with oil seal	with protective lip/ with oil seal	without oil seal	with oil seal	with protective lip/ with oil seal
Leadwire type (IP65)	P.167	P.167	P.167	P.168	P.168	P.168
Connector type (IP67)	P.169	P.169	P.169	P.170	P.170	P.170

<Cautions> Reduce the moment of inertia ratio if high speed response operation is required.
Dimensions are subject to change without notice. Contact us or a dealer for the latest information.
Read the Instruction Manual carefully and understand all precautions and remarks before using the products.

200 V MHMF 1.0 kW [High inertia 130 mm sq.] IP67

Specifications

			AC200 V
Motor model *1			MHMF102L1□□
Applicable driver	Model No.	Multifunction type	MDDLT45SF
		RS485 communication type *2	MDDLN45SG
		Basic type *2	MDDLN45SE
	Frame symbol		D-frame
Power supply capacity		(kVA)	2.4
Rated output		(W)	1000
Rated torque		(N·m)	4.77
Continuous stall torque		(N·m)	5.25
Momentary Max. peak torque		(N·m)	14.3
Rated current		(A(rms))	5.2
Max. current		(A(o-p))	22
Regenerative brake frequency (times/min) Note)1	Without option		No limit Note)2
	DV0P4284		No limit Note)2
Rated rotational speed		(r/min)	2000
Max. rotational speed		(r/min)	3000
Moment of inertia of rotor ($\times 10^{-4}$ kg·m^2)	Without brake		22.9
	With brake		24.1
Recommended moment of inertia ratio of the load and the rotor Note)3			5 times or less
Rotary encoder specifications *3			23-bit Absolute
	Resolution per single turn		8388608

- **Brake specifications** (For details, refer to P.305)

(This brake will be released when it is energized. Do not use this for braking the motor in motion.)

Static friction torque (N·m)	13.7 or more
Engaging time (ms)	100 or less
Releasing time (ms) Note)4	50 or less
Exciting current (DC) (A)	0.79
Releasing voltage (DC) (V)	2 or more
Exciting voltage (DC) (V)	24±2.4

- **Permissible load** (For details, refer to P.304)

During assembly	Radial load P-direction (N)	980
	Thrust load A-direction (N)	588
	Thrust load B-direction (N)	686
During operation	Radial load P-direction (N)	490
	Thrust load A, B-direction (N)	196

- For details of Note)1 to Note)4, refer to P.303.
- Dimensions of Driver, refer to P.58.

*1 □□ in the motor part number represents the motor specifications.

*2 Basic type and RS485 communication type are "Position control type". Detail of model designation, refer to P.22.

*3 When using a rotary encoder as an incremental system (not using multi-turn data), do not connect a battery for absolute encoder.

Torque characteristics (at AC200 V of power voltage <Dotted line represents the torque at 10 % less supply voltage.>)

With oil seal

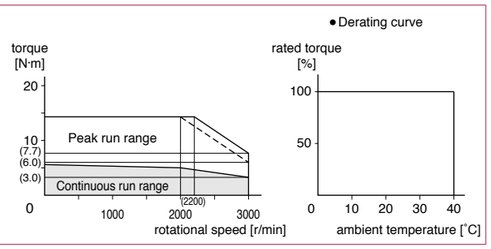

Dimensions

Motor specifications	Key way shaft/ Round shaft					
	without brake			with brake		
	without oil seal	with oil seal	with protective lip/ with oil seal	without oil seal	with oil seal	with protective lip/ with oil seal
Encoder connector Large size (JL10) type	—	P.171		—	P.171	
Encoder connector Small size (JN2) type	—	P.171		—	P.172	

<Cautions> Reduce the moment of inertia ratio if high speed response operation is required.
Dimensions are subject to change without notice. Contact us or a dealer for the latest information.
Read the Instruction Manual carefully and understand all precautions and remarks before using the products.

200 V MHMF 1.5 kW [High inertia 130 mm sq.] IP67

Specifications

			AC200 V
Motor model *1			MHMF152L1□□
Applicable driver	Model No.	Multifunction type	MDDLT55SF
		RS485 communication type *2	MDDLN55SG
		Basic type *2	MDDLN55SE
	Frame symbol		D-frame
Power supply capacity		(kVA)	2.9
Rated output		(W)	1500
Rated torque		(N·m)	7.16
Continuous stall torque		(N·m)	7.52
Momentary Max. peak torque		(N·m)	21.5
Rated current		(A(rms))	8.0
Max. current		(A(o-p))	34
Regenerative brake frequency (times/min) Note)1	Without option		No limit Note)2
	DV0P4284		No limit Note)2
Rated rotational speed		(r/min)	2000
Max. rotational speed		(r/min)	3000
Moment of inertia of rotor ($\times 10^{-4}$ kg·m^2)	Without brake		33.4
	With brake		34.6
Recommended moment of inertia ratio of the load and the rotor Note)3			5 times or less
Rotary encoder specifications *3			23-bit Absolute
	Resolution per single turn		8388608

- **Brake specifications** (For details, refer to P.305)

(This brake will be released when it is energized. Do not use this for braking the motor in motion.)

Static friction torque (N·m)	13.7 or more
Engaging time (ms)	100 or less
Releasing time (ms) Note)4	50 or less
Exciting current (DC) (A)	0.79
Releasing voltage (DC) (V)	2 or more
Exciting voltage (DC) (V)	24±2.4

- **Permissible load** (For details, refer to P.304)

During assembly	Radial load P-direction (N)	980
	Thrust load A-direction (N)	588
	Thrust load B-direction (N)	686
During operation	Radial load P-direction (N)	490
	Thrust load A, B-direction (N)	196

- For details of Note)1 to Note)4, refer to P.303.
- Dimensions of Driver, refer to P.58.

*1 □□ in the motor part number represents the motor specifications.

*2 Basic type and RS485 communication type are "Position control type". Detail of model designation, refer to P.22.

*3 When using a rotary encoder as an incremental system (not using multi-turn data), do not connect a battery for absolute encoder.

Torque characteristics (at AC200 V of power voltage <Dotted line represents the torque at 10 % less supply voltage.>)

With oil seal

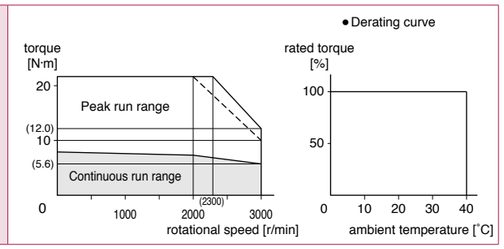

Dimensions

Motor specifications	Key way shaft/ Round shaft					
	without brake			with brake		
	without oil seal	with oil seal	with protective lip/ with oil seal	without oil seal	with oil seal	with protective lip/ with oil seal
Encoder connector Large size (JL10) type	—	P.172		—	P.172	
Encoder connector Small size (JN2) type	—	P.173		—	P.173	

<Cautions> Reduce the moment of inertia ratio if high speed response operation is required.
Dimensions are subject to change without notice. Contact us or a dealer for the latest information.
Read the Instruction Manual carefully and understand all precautions and remarks before using the products.

200 V MHMF 2.0 kW [High inertia 176 mm sq.] IP67

Specifications

			AC200 V
Motor model *1			MHMF202L1□□
Applicable driver	Model No.	Multifunction type	MEDLT83SF
		RS485 communication type *2	MEDLN83SG
		Basic type *2	MEDLN83SE
	Frame symbol		E-frame
Power supply capacity		(kVA)	3.8
Rated output		(W)	2000
Rated torque		(N·m)	9.55
Continuous stall torque		(N·m)	11.5
Momentary Max. peak torque		(N·m)	28.6
Rated current		(A(rms))	12.5
Max. current		(A(o-p))	53
Regenerative brake frequency (times/min) Note)1	Without option		No limit Note)2
	DV0P4285		No limit Note)2
Rated rotational speed		(r/min)	2000
Max. rotational speed		(r/min)	3000
Moment of inertia of rotor ($\times 10^{-4}$ kg·m^2)	Without brake		55.7
	With brake		61.0
Recommended moment of inertia ratio of the load and the rotor Note)3			5 times or less
Rotary encoder specifications *3			23-bit Absolute
	Resolution per single turn		8388608

- **Brake specifications** (For details, refer to P.305)

(This brake will be released when it is energized. Do not use this for braking the motor in motion.)

Static friction torque (N·m)	25.0 or more
Engaging time (ms)	80 or less
Releasing time (ms) Note)4	25 or less
Exciting current (DC) (A)	1.29
Releasing voltage (DC) (V)	2 or more
Exciting voltage (DC) (V)	24±2.4

- **Permissible load** (For details, refer to P.304)

During assembly	Radial load P-direction (N)	1666
	Thrust load A-direction (N)	784
	Thrust load B-direction (N)	980
During operation	Radial load P-direction (N)	784
	Thrust load A, B-direction (N)	343

- For details of Note)1 to Note)4, refer to P.303.
- Dimensions of Driver, refer to P.59.

*1 □□ in the motor part number represents the motor specifications.

*2 Basic type and RS485 communication type are "Position control type". Detail of model designation, refer to P.22.

*3 When using a rotary encoder as an incremental system (not using multi-turn data), do not connect a battery for absolute encoder.

Torque characteristics (at AC200 V of power voltage <Dotted line represents the torque at 10 % less supply voltage.>)

With oil seal

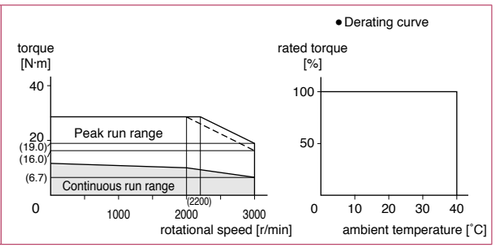

Dimensions

Motor specifications	Key way shaft/ Round shaft					
	without brake			with brake		
	without oil seal	with oil seal	with protective lip/ with oil seal	without oil seal	with oil seal	with protective lip/ with oil seal
Encoder connector Large size (JL10) type	—	P.173		—	P.174	
Encoder connector Small size (JN2) type	—	P.174		—	P.174	

<Cautions> Reduce the moment of inertia ratio if high speed response operation is required.
Dimensions are subject to change without notice. Contact us or a dealer for the latest information.
Read the Instruction Manual carefully and understand all precautions and remarks before using the products.

Specifications

			AC200 V
Motor model *1			MHMF302L1□□
Applicable driver	Model No.	Multifunction type	MFDLTA3SF
		RS485 communication type *2	MFDLNA3SG
		Basic type *2	MFDLNA3SE
	Frame symbol		F-frame
Power supply capacity		(kVA)	5.2
Rated output		(W)	3000
Rated torque		(N·m)	14.3
Continuous stall torque		(N·m)	17.2
Momentary Max. peak torque		(N·m)	43.0
Rated current		(A(rms))	17.0
Max. current		(A(o-p))	72
Regenerative brake frequency (times/min) Note)1	Without option		No limit Note)2
	DV0P4285×2		No limit Note)2
Rated rotational speed		(r/min)	2000
Max. rotational speed		(r/min)	3000
Moment of inertia of rotor ($\times 10^{-4}$ kg·m^2)	Without brake		85.3
	With brake		90.7
Recommended moment of inertia ratio of the load and the rotor Note)3			5 times or less
Rotary encoder specifications *3			23-bit Absolute
	Resolution per single turn		8388608

- **Brake specifications** (For details, refer to P.305)

(This brake will be released when it is energized. Do not use this for braking the motor in motion.)

Static friction torque (N·m)	25.0 or more
Engaging time (ms)	80 or less
Releasing time (ms) Note)4	25 or less
Exciting current (DC) (A)	1.29
Releasing voltage (DC) (V)	2 or more
Exciting voltage (DC) (V)	24±2.4

- **Permissible load** (For details, refer to P.304)

During assembly	Radial load P-direction (N)	1666
	Thrust load A-direction (N)	784
	Thrust load B-direction (N)	980
During operation	Radial load P-direction (N)	784
	Thrust load A, B-direction (N)	343

- For details of Note)1 to Note)4, refer to P.303.
- Dimensions of Driver, refer to P.59.

*1 □□ in the motor part number represents the motor specifications.

*2 Basic type and RS485 communication type are "Position control type". Detail of model designation, refer to P.22.

*3 When using a rotary encoder as an incremental system (not using multi-turn data), do not connect a battery for absolute encoder.

Torque characteristics (at AC200 V of power voltage <Dotted line represents the torque at 10 % less supply voltage.>)

With oil seal

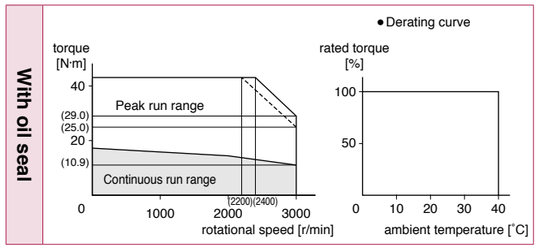

Dimensions

Motor specifications	Key way shaft/ Round shaft					
	without brake			with brake		
	without oil seal	with oil seal	with protective lip/ with oil seal	without oil seal	with oil seal	with protective lip/ with oil seal
Encoder connector Large size (JL10) type	—	P.175		—	P.175	
Encoder connector Small size (JN2) type	—	P.175		—	P.176	

<Cautions> Reduce the moment of inertia ratio if high speed response operation is required.
Dimensions are subject to change without notice. Contact us or a dealer for the latest information.
Read the Instruction Manual carefully and understand all precautions and remarks before using the products.

200 V MHMF 4.0 kW [High inertia 176 mm sq.] IP67

Specifications

			AC200 V
Motor model *1			MHMF402L1□□
Applicable driver	Model No.	Multifunction type	MFDLTB3SF
		RS485 communication type *2	MFDLNB3SG
		Basic type *2	MFDLNB3SE
	Frame symbol		F-frame
Power supply capacity (kVA)			6.5
Rated output (W)			4000
Rated torque (N·m)			19.1
Continuous stall torque (N·m)			22.0
Momentary Max. peak torque (N·m)			57.3
Rated current (A(rms))			20
Max. current (A(o-p))			85
Regenerative brake frequency (times/min) Note)1		Without option	No limit Note)2
		DV0P4285×2	No limit Note)2
Rated rotational speed (r/min)			2000
Max. rotational speed (r/min)			3000
Moment of inertia of rotor ($\times 10^{-4}$ kg·m^2)		Without brake	104
		With brake	110
Recommended moment of inertia ratio of the load and the rotor Note)3			5 times or less
Rotary encoder specifications *3			23-bit Absolute
	Resolution per single turn		8388608

- **Brake specifications** (For details, refer to P.305)

(This brake will be released when it is energized. Do not use this for braking the motor in motion.)

Static friction torque (N·m)	25.0 or more
Engaging time (ms)	80 or less
Releasing time (ms) Note)4	25 or less
Exciting current (DC) (A)	1.29
Releasing voltage (DC) (V)	2 or more
Exciting voltage (DC) (V)	24±2.4

- **Permissible load** (For details, refer to P.304)

During assembly	Radial load P-direction (N)	1666
	Thrust load A-direction (N)	784
	Thrust load B-direction (N)	980
During operation	Radial load P-direction (N)	784
	Thrust load A, B-direction (N)	343

- For details of Note)1 to Note)4, refer to P.303.
- Dimensions of Driver, refer to P.59.

*1 □□ in the motor part number represents the motor specifications.

*2 Basic type and RS485 communication type are "Position control type". Detail of model designation, refer to P.22.

*3 When using a rotary encoder as an incremental system (not using multi-turn data), do not connect a battery for absolute encoder.

Torque characteristics (at AC200 V of power voltage <Dotted line represents the torque at 10 % less supply voltage.>)

With oil seal

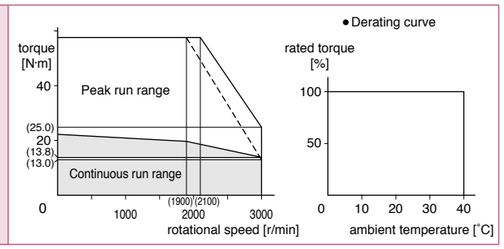

Dimensions

Motor specifications	Key way shaft/ Round shaft					
	without brake			with brake		
	without oil seal	with oil seal	with protective lip/ with oil seal	without oil seal	with oil seal	with protective lip/ with oil seal
Encoder connector Large size (JL10) type	—	P.176		—	P.176	
Encoder connector Small size (JN2) type	—	P.177		—	P.177	

<Cautions> Reduce the moment of inertia ratio if high speed response operation is required.
Dimensions are subject to change without notice. Contact us or a dealer for the latest information.
Read the Instruction Manual carefully and understand all precautions and remarks before using the products.

Specifications

			AC200 V
Motor model *1			MHMF502L1□□
Applicable driver	Model No.	Multifunction type	MFDLTB3SF
		RS485 communication type *2	MFDLNB3SG
		Basic type *2	MFDLNB3SE
	Frame symbol		F-frame
Power supply capacity (kVA)			7.8
Rated output (W)			5000
Rated torque (N·m)			23.9
Continuous stall torque (N·m)			26.3
Momentary Max. peak torque (N·m)			71.6
Rated current (A(rms))			23.3
Max. current (A(o-p))			99
Regenerative brake frequency (times/min) Note)1		Without option	No limit Note)2
		DV0P4285×2	No limit Note)2
Rated rotational speed (r/min)			2000
Max. rotational speed (r/min)			3000
Moment of inertia of rotor ($\times 10^{-4}$ kg·m^2)		Without brake	146
		With brake	151
Recommended moment of inertia ratio of the load and the rotor Note)3			5 times or less
Rotary encoder specifications *3			23-bit Absolute
	Resolution per single turn		8388608

- **Brake specifications** (For details, refer to P.305)

(This brake will be released when it is energized. Do not use this for braking the motor in motion.)

Static friction torque (N·m)	44.1 or more
Engaging time (ms)	150 or less
Releasing time (ms) Note)4	30 or less
Exciting current (DC) (A)	1.29
Releasing voltage (DC) (V)	2 or more
Exciting voltage (DC) (V)	24±2.4

- **Permissible load** (For details, refer to P.304)

During assembly	Radial load P-direction (N)	1666
	Thrust load A-direction (N)	784
	Thrust load B-direction (N)	980
During operation	Radial load P-direction (N)	784
	Thrust load A, B-direction (N)	343

- For details of Note)1 to Note)4, refer to P.303.
- Dimensions of Driver, refer to P.59.

*1 □□ in the motor part number represents the motor specifications.

*2 Basic type and RS485 communication type are "Position control type". Detail of model designation, refer to P.22.

*3 When using a rotary encoder as an incremental system (not using multi-turn data), do not connect a battery for absolute encoder.

Torque characteristics (at AC200 V of power voltage <Dotted line represents the torque at 10 % less supply voltage.>)

With oil seal

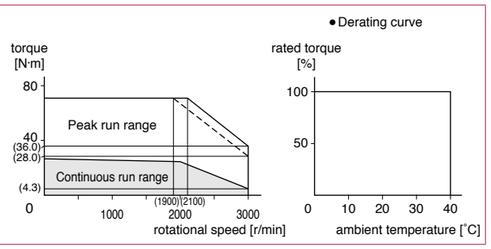

Dimensions

Motor specifications	Key way shaft/ Round shaft					
	without brake			with brake		
	without oil seal	with oil seal	with protective lip/ with oil seal	without oil seal	with oil seal	with protective lip/ with oil seal
Encoder connector Large size (JL10) type	—	P.177		—	P.178	
Encoder connector Small size (JN2) type	—	P.178		—	P.178	

<Cautions> Reduce the moment of inertia ratio if high speed response operation is required.
Dimensions are subject to change without notice. Contact us or a dealer for the latest information.
Read the Instruction Manual carefully and understand all precautions and remarks before using the products.

200 V MHMF 7.5 kW [High inertia 176 mm sq.] IP67

Specifications

			AC200 V
Motor model *1			MHMF752L1□□
Applicable driver	Model No.	Multifunction type	MGDLTC3SF
		RS485 communication type *2	—
		Basic type *2	—
	Frame symbol		G-frame
Power supply capacity		(kVA)	11
Rated output		(W)	7500
Rated torque		(N·m)	47.8
Continuous stall torque		(N·m)	47.8
Momentary Max. peak torque		(N·m)	125
Rated current		(A(rms))	40.2
Max. current		(A(o-p))	154
Regenerative brake frequency (times/min) Note)1	Without option		No limit Note)2
	DV0P4285×3		No limit Note)2
Rated rotational speed		(r/min)	1500
Max. rotational speed		(r/min)	3000
Moment of inertia of rotor ($\times 10^{-4}$ kg·m^2)	Without brake		272
	With brake		279
Recommended moment of inertia ratio of the load and the rotor Note)3			5 times or less
Rotary encoder specifications *3			23-bit Absolute
	Resolution per single turn		8388608

- **Brake specifications** (For details, refer to P.305)

(This brake will be released when it is energized. Do not use this for braking the motor in motion.)

Static friction torque (N·m)	63.0 or more
Engaging time (ms)	200 or less
Releasing time (ms) Note)4	80 or less
Exciting current (DC) (A)	1.29
Releasing voltage (DC) (V)	2 or more
Exciting voltage (DC) (V)	24±2.4

- **Permissible load** (For details, refer to P.304)

During assembly	Radial load P-direction (N)	2058
	Thrust load A-direction (N)	980
	Thrust load B-direction (N)	1176
During operation	Radial load P-direction (N)	1176
	Thrust load A, B-direction (N)	490

- For details of Note)1 to Note)4, refer to P.303.
- Dimensions of Driver, refer to P.60.
- *1 □□ in the motor part number represents the motor specifications.
- *2 Basic type and RS485 communication type are "Position control type". Detail of model designation, refer to P.22.
- *3 When using a rotary encoder as an incremental system (not using multi-turn data), do not connect a battery for absolute encoder.

Torque characteristics (at AC200 V of power voltage <Dotted line represents the torque at 10 % less supply voltage.>)

With oil seal

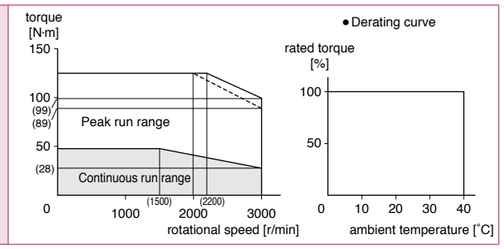

Dimensions

Motor specifications	Key way shaft/ Round shaft					
	without brake			with brake		
	without oil seal	with oil seal	with protective lip/ with oil seal	without oil seal	with oil seal	with protective lip/ with oil seal
Encoder connector Large size (JL10) type	—	P.179	—	—	P.179	—
Encoder connector Small size (JN2) type	—	P.179	—	—	P.180	—

<Cautions> Reduce the moment of inertia ratio if high speed response operation is required.
Dimensions are subject to change without notice. Contact us or a dealer for the latest information.
Read the Instruction Manual carefully and understand all precautions and remarks before using the products.

200 V MDMF 1.0 kW [Middle inertia 130 mm sq.] IP67

Specifications

			AC200 V
Motor model *1			MDMF102L1□□
Applicable driver	Model No.	Multifunction type	MDDLT45SF
		RS485 communication type *2	MDDLN45SG
		Basic type *2	MDDLN45SE
	Frame symbol		D-frame
Power supply capacity		(kVA)	2.4
Rated output		(W)	1000
Rated torque		(N·m)	4.77
Continuous stall torque		(N·m)	5.25
Momentary Max. peak torque		(N·m)	14.3
Rated current		(A(rms))	5.2
Max. current		(A(o-p))	22
Regenerative brake frequency (times/min) Note)1	Without option		No limit Note)2
	DV0P4284		No limit Note)2
Rated rotational speed		(r/min)	2000
Max. rotational speed		(r/min)	3000
Moment of inertia of rotor ($\times 10^{-4}$ kg·m^2)	Without brake		6.18
	With brake		7.40
Recommended moment of inertia ratio of the load and the rotor Note)3			10 times or less
Rotary encoder specifications *3			23-bit Absolute
	Resolution per single turn		8388608

- **Brake specifications** (For details, refer to P.305)

(This brake will be released when it is energized. Do not use this for braking the motor in motion.)

Static friction torque (N·m)	13.7 or more
Engaging time (ms)	100 or less
Releasing time (ms) Note)4	50 or less
Exciting current (DC) (A)	0.79
Releasing voltage (DC) (V)	2 or more
Exciting voltage (DC) (V)	24±2.4

- **Permissible load** (For details, refer to P.304)

During assembly	Radial load P-direction (N)	980
	Thrust load A-direction (N)	588
	Thrust load B-direction (N)	686
During operation	Radial load P-direction (N)	490
	Thrust load A, B-direction (N)	196

- For details of Note)1 to Note)4, refer to P.303.
- Dimensions of Driver, refer to P.58.
- *1 □□ in the motor part number represents the motor specifications.
- *2 Basic type and RS485 communication type are "Position control type". Detail of model designation, refer to P.22.
- *3 When using a rotary encoder as an incremental system (not using multi-turn data), do not connect a battery for absolute encoder.

Torque characteristics (at AC200 V of power voltage <Dotted line represents the torque at 10 % less supply voltage.>)

With oil seal

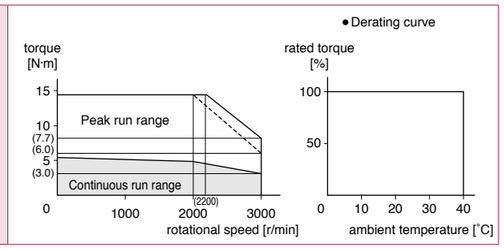

Dimensions

Motor specifications	Key way shaft/ Round shaft					
	without brake			with brake		
	without oil seal	with oil seal	with protective lip/ with oil seal	without oil seal	with oil seal	with protective lip/ with oil seal
Encoder connector Large size (JL10) type	—	P.180		—	P.180	
Encoder connector Small size (JN2) type	—	P.181		—	P.181	

<Cautions> Reduce the moment of inertia ratio if high speed response operation is required.
Dimensions are subject to change without notice. Contact us or a dealer for the latest information.
Read the Instruction Manual carefully and understand all precautions and remarks before using the products.

200 V MDMF 1.5 kW [Middle inertia 130 mm sq.] IP67

Specifications

			AC200 V
Motor model *1			MDMF152L1□□
Applicable driver	Model No.	Multifunction type	MDDLT55SF
		RS485 communication type *2	MDDLN55SG
		Basic type *2	MDDLN55SE
	Frame symbol		D-frame
Power supply capacity		(kVA)	2.9
Rated output		(W)	1500
Rated torque		(N·m)	7.16
Continuous stall torque		(N·m)	7.52
Momentary Max. peak torque		(N·m)	21.5
Rated current		(A(rms))	8.0
Max. current		(A(o-p))	34
Regenerative brake frequency (times/min) Note)1	Without option		No limit Note)2
	DV0P4284		No limit Note)2
Rated rotational speed		(r/min)	2000
Max. rotational speed		(r/min)	3000
Moment of inertia of rotor ($\times 10^{-4}$ kg·m^2)	Without brake		9.16
	With brake		10.4
Recommended moment of inertia ratio of the load and the rotor Note)3			10 times or less
Rotary encoder specifications *3			23-bit Absolute
	Resolution per single turn		8388608

- **Brake specifications** (For details, refer to P.305)

(This brake will be released when it is energized. Do not use this for braking the motor in motion.)

Static friction torque (N·m)	13.7 or more
Engaging time (ms)	100 or less
Releasing time (ms) Note)4	50 or less
Exciting current (DC) (A)	0.79
Releasing voltage (DC) (V)	2 or more
Exciting voltage (DC) (V)	24±2.4

- **Permissible load** (For details, refer to P.304)

During assembly	Radial load P-direction (N)	980
	Thrust load A-direction (N)	588
	Thrust load B-direction (N)	686
During operation	Radial load P-direction (N)	490
	Thrust load A, B-direction (N)	196

- For details of Note)1 to Note)4, refer to P.303.
- Dimensions of Driver, refer to P.58.

*1 □□ in the motor part number represents the motor specifications.

*2 Basic type and RS485 communication type are "Position control type". Detail of model designation, refer to P.22.

*3 When using a rotary encoder as an incremental system (not using multi-turn data), do not connect a battery for absolute encoder.

Torque characteristics (at AC200 V of power voltage <Dotted line represents the torque at 10 % less supply voltage.>)

With oil seal

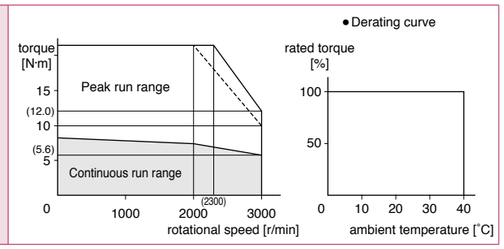

Dimensions

Motor specifications	Key way shaft/ Round shaft					
	without brake			with brake		
	without oil seal	with oil seal	with protective lip/ with oil seal	without oil seal	with oil seal	with protective lip/ with oil seal
Encoder connector Large size (JL10) type	—	P.181		—	P.182	
Encoder connector Small size (JN2) type	—	P.182		—	P.182	

<Cautions> Reduce the moment of inertia ratio if high speed response operation is required.
Dimensions are subject to change without notice. Contact us or a dealer for the latest information.
Read the Instruction Manual carefully and understand all precautions and remarks before using the products.

200 V MDMF 2.0 kW [Middle inertia 130 mm sq.] IP67

Specifications

			AC200 V
Motor model *1			MDMF202L1□□
Applicable driver	Model No.	Multifunction type	MEDLT83SF
		RS485 communication type *2	MEDLN83SG
		Basic type *2	MEDLN83SE
	Frame symbol		E-frame
Power supply capacity		(kVA)	3.8
Rated output		(W)	2000
Rated torque		(N·m)	9.55
Continuous stall torque		(N·m)	10.0
Momentary Max. peak torque		(N·m)	28.6
Rated current		(A(rms))	9.9
Max. current		(A(o-p))	42
Regenerative brake frequency (times/min) Note)1	Without option		No limit Note)2
	DV0P4285		No limit Note)2
Rated rotational speed		(r/min)	2000
Max. rotational speed		(r/min)	3000
Moment of inertia of rotor ($\times 10^{-4}$ kg·m^2)	Without brake		12.1
	With brake		13.3
Recommended moment of inertia ratio of the load and the rotor Note)3			10 times or less
Rotary encoder specifications *3			23-bit Absolute
	Resolution per single turn		8388608

- **Brake specifications** (For details, refer to P.305)

(This brake will be released when it is energized. Do not use this for braking the motor in motion.)

Static friction torque (N·m)	13.7 or more
Engaging time (ms)	100 or less
Releasing time (ms) Note)4	50 or less
Exciting current (DC) (A)	0.79
Releasing voltage (DC) (V)	2 or more
Exciting voltage (DC) (V)	24±2.4

- **Permissible load** (For details, refer to P.304)

During assembly	Radial load P-direction (N)	980
	Thrust load A-direction (N)	588
	Thrust load B-direction (N)	686
During operation	Radial load P-direction (N)	490
	Thrust load A, B-direction (N)	196

- For details of Note)1 to Note)4, refer to P.303.
- Dimensions of Driver, refer to P.59.

*1 □□ in the motor part number represents the motor specifications.

*2 Basic type and RS485 communication type are "Position control type". Detail of model designation, refer to P.22.

*3 When using a rotary encoder as an incremental system (not using multi-turn data), do not connect a battery for absolute encoder.

Torque characteristics (at AC200 V of power voltage <Dotted line represents the torque at 10 % less supply voltage.>)

With oil seal

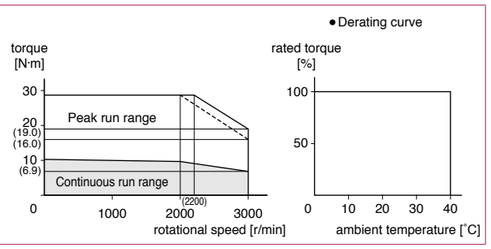

Dimensions

Motor specifications	Key way shaft/ Round shaft					
	without brake			with brake		
	without oil seal	with oil seal	with protective lip/ with oil seal	without oil seal	with oil seal	with protective lip/ with oil seal
Encoder connector Large size (JL10) type	—	P.183		—	P.183	
Encoder connector Small size (JN2) type	—	P.183		—	P.184	

<Cautions> Reduce the moment of inertia ratio if high speed response operation is required.
Dimensions are subject to change without notice. Contact us or a dealer for the latest information.
Read the Instruction Manual carefully and understand all precautions and remarks before using the products.

200 V MDMF 3.0 kW [Middle inertia 130 mm sq.] IP67

Specifications

			AC200 V
Motor model *1			MDMF302L1□□
Applicable driver	Model No.	Multifunction type	MFDLTA3SF
		RS485 communication type *2	MFDLNA3SG
		Basic type *2	MFDLNA3SE
	Frame symbol		F-frame
Power supply capacity (kVA)			5.2
Rated output (W)			3000
Rated torque (N·m)			14.3
Continuous stall torque (N·m)			15.0
Momentary Max. peak torque (N·m)			43.0
Rated current (A(rms))			16.4
Max. current (A(o-p))			70
Regenerative brake frequency (times/min) Note)1		Without option	No limit Note)2
		DV0P4285×2	No limit Note)2
Rated rotational speed (r/min)			2000
Max. rotational speed (r/min)			3000
Moment of inertia of rotor ($\times 10^{-4}$ kg·m^2)		Without brake	18.6
		With brake	19.6
Recommended moment of inertia ratio of the load and the rotor Note)3			10 times or less
Rotary encoder specifications *3			23-bit Absolute
	Resolution per single turn		8388608

- **Brake specifications** (For details, refer to P.305)

(This brake will be released when it is energized. Do not use this for braking the motor in motion.)

Static friction torque (N·m)	22.0 or more
Engaging time (ms)	110 or less
Releasing time (ms) Note)4	50 or less
Exciting current (DC) (A)	0.90
Releasing voltage (DC) (V)	2 or more
Exciting voltage (DC) (V)	24±2.4

- **Permissible load** (For details, refer to P.304)

During assembly	Radial load P-direction (N)	980
	Thrust load A-direction (N)	588
	Thrust load B-direction (N)	686
During operation	Radial load P-direction (N)	784
	Thrust load A, B-direction (N)	343

- For details of Note)1 to Note)4, refer to P.303.
- Dimensions of Driver, refer to P.59.

*1 □□ in the motor part number represents the motor specifications.

*2 Basic type and RS485 communication type are "Position control type". Detail of model designation, refer to P.22.

*3 When using a rotary encoder as an incremental system (not using multi-turn data), do not connect a battery for absolute encoder.

Torque characteristics (at AC200 V of power voltage <Dotted line represents the torque at 10 % less supply voltage.>)

With oil seal

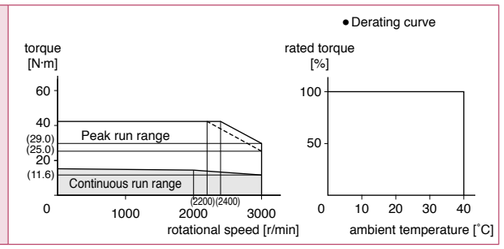

Dimensions

Motor specifications	Key way shaft/ Round shaft					
	without brake			with brake		
	without oil seal	with oil seal	with protective lip/ with oil seal	without oil seal	with oil seal	with protective lip/ with oil seal
Encoder connector Large size (JL10) type	—	P.184		—	P.184	
Encoder connector Small size (JN2) type	—	P.185		—	P.185	

200 V MDMF 4.0 kW [Middle inertia 176 mm sq.] IP67

Specifications

			AC200 V
Motor model *1			MDMF402L1□□
Applicable driver	Model No.	Multifunction type	MFDLTB3SF
		RS485 communication type *2	MFDLNB3SG
		Basic type *2	MFDLNB3SE
	Frame symbol		F-frame
Power supply capacity (kVA)			6.5
Rated output (W)			4000
Rated torque (N·m)			19.1
Continuous stall torque (N·m)			22.0
Momentary Max. peak torque (N·m)			57.3
Rated current (A(rms))			20.0
Max. current (A(o-p))			85
Regenerative brake frequency (times/min) Note)1		Without option	No limit Note)2
		DV0P4285×2	No limit Note)2
Rated rotational speed (r/min)			2000
Max. rotational speed (r/min)			3000
Moment of inertia of rotor ($\times 10^{-4}$ kg·m^2)		Without brake	46.9
		With brake	52.3
Recommended moment of inertia ratio of the load and the rotor Note)3			10 times or less
Rotary encoder specifications *3			23-bit Absolute
	Resolution per single turn		8388608

- **Brake specifications** (For details, refer to P.305)

(This brake will be released when it is energized. Do not use this for braking the motor in motion.)

Static friction torque (N·m)	25.0 or more
Engaging time (ms)	80 or less
Releasing time (ms) Note)4	25 or less
Exciting current (DC) (A)	1.29
Releasing voltage (DC) (V)	2 or more
Exciting voltage (DC) (V)	24±2.4

- **Permissible load** (For details, refer to P.304)

During assembly	Radial load P-direction (N)	1666
	Thrust load A-direction (N)	784
	Thrust load B-direction (N)	980
During operation	Radial load P-direction (N)	784
	Thrust load A, B-direction (N)	343

- For details of Note)1 to Note)4, refer to P.303.
- Dimensions of Driver, refer to P.59.

*1 □□ in the motor part number represents the motor specifications.

*2 Basic type and RS485 communication type are "Position control type". Detail of model designation, refer to P.22.

*3 When using a rotary encoder as an incremental system (not using multi-turn data), do not connect a battery for absolute encoder.

Torque characteristics (at AC200 V of power voltage <Dotted line represents the torque at 10 % less supply voltage.>)

With oil seal

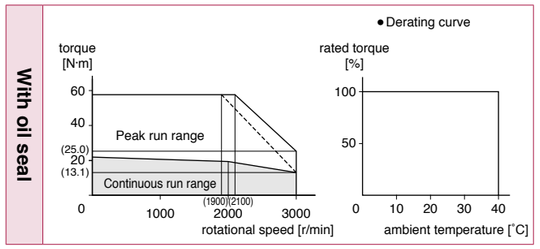

Dimensions

Motor specifications	Key way shaft/ Round shaft					
	without brake			with brake		
	without oil seal	with oil seal	with protective lip/ with oil seal	without oil seal	with oil seal	with protective lip/ with oil seal
Encoder connector Large size (JL10) type	—	P.185		—	P.186	
Encoder connector Small size (JN2) type	—	P.186		—	P.186	

<Cautions> Reduce the moment of inertia ratio if high speed response operation is required.
Dimensions are subject to change without notice. Contact us or a dealer for the latest information.
Read the Instruction Manual carefully and understand all precautions and remarks before using the products.

200 V MDMF 5.0 kW [Middle inertia 176 mm sq.] IP67

Specifications

			AC200 V
Motor model *1			MDMF502L1□□
Applicable driver	Model No.	Multifunction type	MFDLTB3SF
		RS485 communication type *2	MFDLNB3SG
		Basic type *2	MFDLNB3SE
	Frame symbol		F-frame
Power supply capacity (kVA)			7.8
Rated output (W)			5000
Rated torque (N·m)			23.9
Continuous stall torque (N·m)			26.3
Momentary Max. peak torque (N·m)			71.6
Rated current (A(rms))			23.3
Max. current (A(o-p))			99
Regenerative brake frequency (times/min) Note)1	Without option		No limit Note)2
	DV0P4285×2		No limit Note)2
Rated rotational speed (r/min)			2000
Max. rotational speed (r/min)			3000
Moment of inertia of rotor (×10^{-4} kg·m^2)	Without brake		58.2
	With brake		63.0
Recommended moment of inertia ratio of the load and the rotor Note)3			10 times or less
Rotary encoder specifications *3			23-bit Absolute
	Resolution per single turn		8388608

- **Brake specifications** (For details, refer to P.305)

(This brake will be released when it is energized. Do not use this for braking the motor in motion.)

Static friction torque (N·m)	44.1 or more
Engaging time (ms)	150 or less
Releasing time (ms) Note)4	30 or less
Exciting current (DC) (A)	1.29
Releasing voltage (DC) (V)	2 or more
Exciting voltage (DC) (V)	24±2.4

- **Permissible load** (For details, refer to P.304)

During assembly	Radial load P-direction (N)	1666
	Thrust load A-direction (N)	784
	Thrust load B-direction (N)	980
During operation	Radial load P-direction (N)	784
	Thrust load A, B-direction (N)	343

- For details of Note)1 to Note)4, refer to P.303.
- Dimensions of Driver, refer to P.59.

*1 □□ in the motor part number represents the motor specifications.

*2 Basic type and RS485 communication type are "Position control type". Detail of model designation, refer to P.22.

*3 When using a rotary encoder as an incremental system (not using multi-turn data), do not connect a battery for absolute encoder.

Torque characteristics (at AC200 V of power voltage <Dotted line represents the torque at 10 % less supply voltage.>)

With oil seal

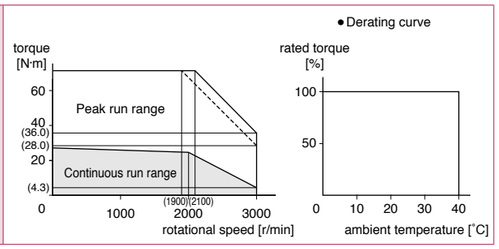

Dimensions

Motor specifications	Key way shaft/ Round shaft					
	without brake			with brake		
	without oil seal	with oil seal	with protective lip/ with oil seal	without oil seal	with oil seal	with protective lip/ with oil seal
Encoder connector Large size (JL10) type	—	P.187		—	P.187	
Encoder connector Small size (JN2) type	—	P.187		—	P.188	

<Cautions> Reduce the moment of inertia ratio if high speed response operation is required.
Dimensions are subject to change without notice. Contact us or a dealer for the latest information.
Read the Instruction Manual carefully and understand all precautions and remarks before using the products.

200 V MDMF 7.5 kW [Middle inertia 176 mm sq.] IP67

Specifications

			AC200 V
Motor model *1			MDMF752L1□□
Applicable driver	Model No.	Multifunction type	MGDLTC3SF
		RS485 communication type *2	—
		Basic type *2	—
	Frame symbol		G-frame
Power supply capacity (kVA)			11
Rated output (W)			7500
Rated torque (N·m)			47.8
Continuous stall torque (N·m)			47.8
Momentary Max. peak torque (N·m)			125
Rated current (A(rms))			40.2
Max. current (A(o-p))			154
Regenerative brake frequency (times/min) Note)1	Without option		No limit Note)2
	DV0P4285×3		No limit Note)2
Rated rotational speed (r/min)			1500
Max. rotational speed (r/min)			3000
Moment of inertia of rotor (×10^{-4} kg·m^2)	Without brake		122
	With brake		127
Recommended moment of inertia ratio of the load and the rotor Note)3			10 times or less
Rotary encoder specifications *3			23-bit Absolute
	Resolution per single turn		8388608

- **Brake specifications** (For details, refer to P.305)

(This brake will be released when it is energized. Do not use this for braking the motor in motion.)

Static friction torque (N·m)	63.0 or more
Engaging time (ms)	200 or less
Releasing time (ms) Note)4	80 or less
Exciting current (DC) (A)	1.29
Releasing voltage (DC) (V)	2 or more
Exciting voltage (DC) (V)	24±2.4

- **Permissible load** (For details, refer to P.304)

During assembly	Radial load P-direction (N)	2058
	Thrust load A-direction (N)	980
	Thrust load B-direction (N)	1176
During operation	Radial load P-direction (N)	1176
	Thrust load A, B-direction (N)	490

- For details of Note)1 to Note)4, refer to P.303.
- Dimensions of Driver, refer to P.60.

*1 □□ in the motor part number represents the motor specifications.

*2 Basic type and RS485 communication type are "Position control type". Detail of model designation, refer to P.22.

*3 When using a rotary encoder as an incremental system (not using multi-turn data), do not connect a battery for absolute encoder.

Torque characteristics (at AC200 V of power voltage <Dotted line represents the torque at 10 % less supply voltage.>)

With oil seal

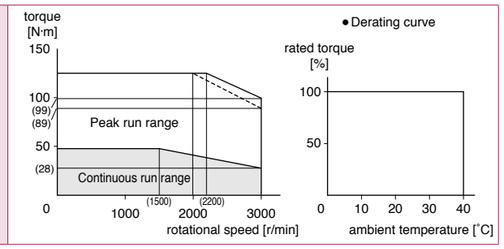

Dimensions

Motor specifications	Key way shaft/ Round shaft					
	without brake			with brake		
	without oil seal	with oil seal	with protective lip/ with oil seal	without oil seal	with oil seal	with protective lip/ with oil seal
Encoder connector Large size (JL10) type	—	P.188	—	—	P.188	—
Encoder connector Small size (JN2) type	—	P.189	—	—	P.189	—

<Cautions> Reduce the moment of inertia ratio if high speed response operation is required.
Dimensions are subject to change without notice. Contact us or a dealer for the latest information.
Read the Instruction Manual carefully and understand all precautions and remarks before using the products.

200 V MDMF 11.0 kW [Middle inertia 220 mm sq.] IP67

Specifications

			AC200 V
Motor model *1			MDMFC12L1□□
Applicable driver	Model No.	Multifunction type	MHDLTE3SF
		RS485 communication type *2	—
		Basic type *2	—
	Frame symbol		H-frame
Power supply capacity		(kVA)	15
Rated output		(W)	11000
Rated torque		(N·m)	70.0
Continuous stall torque		(N·m)	70.0
Momentary Max. peak torque		(N·m)	175
Rated current		(A(rms))	57.1
Max. current		(A(o-p))	209
Regenerative brake frequency (times/min) Note)1	Without option		No limit Note)2
	DV0P4285×6		No limit Note)2
Rated rotational speed		(r/min)	1500
Max. rotational speed		(r/min)	2000
Moment of inertia of rotor (×10^{-4} kg·m^2)	Without brake		205
	With brake		214
Recommended moment of inertia ratio of the load and the rotor Note)3			10 times or less
Rotary encoder specifications *3			23-bit Absolute
	Resolution per single turn		8388608

- **Brake specifications** (For details, refer to P.305)

(This brake will be released when it is energized. Do not use this for braking the motor in motion.)

Static friction torque (N·m)	100 or more
Engaging time (ms)	300 or less
Releasing time (ms) Note)4	140 or less
Exciting current (DC) (A)	1.08
Releasing voltage (DC) (V)	2 or more
Exciting voltage (DC) (V)	24±2.4

- **Permissible load** (For details, refer to P.304)

During assembly	Radial load P-direction (N)	4508
	Thrust load A-direction (N)	1470
	Thrust load B-direction (N)	2646
During operation	Radial load P-direction (N)	2254
	Thrust load A, B-direction (N)	686

- For details of Note)1 to Note)4, refer to P.303.
- Dimensions of Driver, refer to P.61.

*1 □□ in the motor part number represents the motor specifications.

*2 Basic type and RS485 communication type are "Position control type". Detail of model designation, refer to P.22.

*3 When using a rotary encoder as an incremental system (not using multi-turn data), do not connect a battery for absolute encoder.

Torque characteristics (at AC200 V of power voltage <Dotted line represents the torque at 10 % less supply voltage.>)

With oil seal

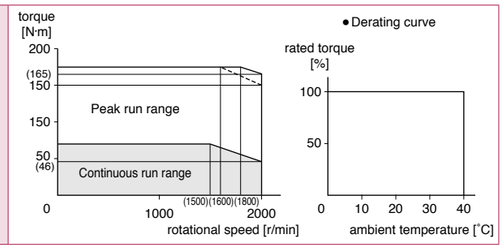

Dimensions

Motor specifications	Key way shaft/ Round shaft					
	without brake			with brake		
	without oil seal	with oil seal	with protective lip/ with oil seal	without oil seal	with oil seal	with protective lip/ with oil seal
Encoder connector Large size (JL10) type	—	P.189	—	—	P.190	—
Encoder connector Small size (JN2) type	—	P.190	—	—	P.190	—

<Cautions> Reduce the moment of inertia ratio if high speed response operation is required.
Dimensions are subject to change without notice. Contact us or a dealer for the latest information.
Read the Instruction Manual carefully and understand all precautions and remarks before using the products.

Specifications

			AC200 V
Motor model *1			MDMFC52L1□□
Applicable driver	Model No.	Multifunction type	MHDLTE3SF
		RS485 communication type *2	—
		Basic type *2	—
	Frame symbol		H-frame
Power supply capacity		(kVA)	20
Rated output		(W)	15000
Rated torque		(N·m)	95.5
Continuous stall torque		(N·m)	95.5
Momentary Max. peak torque		(N·m)	224
Rated current		(A(rms))	65.8
Max. current		(A(o-p))	225
Regenerative brake frequency (times/min) Note)1	Without option		No limit Note)2
	DV0P4285×6		No limit Note)2
Rated rotational speed		(r/min)	1500
Max. rotational speed		(r/min)	2000
Moment of inertia of rotor (×10^{-4} kg·m^2)	Without brake		280
	With brake		289
Recommended moment of inertia ratio of the load and the rotor Note)3			10 times or less
Rotary encoder specifications *3			23-bit Absolute
	Resolution per single turn		8388608

- **Brake specifications** (For details, refer to P.305)

(This brake will be released when it is energized. Do not use this for braking the motor in motion.)

Static friction torque (N·m)	100 or more
Engaging time (ms)	300 or less
Releasing time (ms) Note)4	140 or less
Exciting current (DC) (A)	1.08
Releasing voltage (DC) (V)	2 or more
Exciting voltage (DC) (V)	24±2.4

- **Permissible load** (For details, refer to P.304)

During assembly	Radial load P-direction (N)	4508
	Thrust load A-direction (N)	1470
	Thrust load B-direction (N)	2646
During operation	Radial load P-direction (N)	2254
	Thrust load A, B-direction (N)	686

- For details of Note)1 to Note)4, refer to P.303.
- Dimensions of Driver, refer to P.61.

*1 □□ in the motor part number represents the motor specifications.

*2 Basic type and RS485 communication type are "Position control type". Detail of model designation, refer to P.22.

*3 When using a rotary encoder as an incremental system (not using multi-turn data), do not connect a battery for absolute encoder.

Torque characteristics (at AC200 V of power voltage <Dotted line represents the torque at 10 % less supply voltage.>)

With oil seal

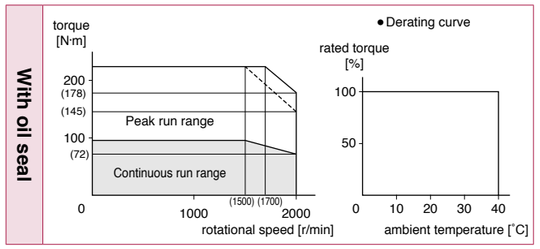

Dimensions

Motor specifications	Key way shaft/ Round shaft					
	without brake			with brake		
	without oil seal	with oil seal	with protective lip/ with oil seal	without oil seal	with oil seal	with protective lip/ with oil seal
Encoder connector Large size (JL10) type	—	P.191	—	—	P.191	—
Encoder connector Small size (JN2) type	—	P.191	—	—	P.192	—

<Cautions> Reduce the moment of inertia ratio if high speed response operation is required.
Dimensions are subject to change without notice. Contact us or a dealer for the latest information.
Read the Instruction Manual carefully and understand all precautions and remarks before using the products.

200 V MDMF 22.0 kW [Middle inertia 220 mm sq.] IP44

Specifications

			AC200 V
Motor model *1			MDMFD22L1□□
Applicable driver	Model No.	Multifunction type	MHDLTF3SF
		RS485 communication type *2	—
		Basic type *2	—
	Frame symbol		H-frame
Power supply capacity		(kVA)	28
Rated output		(W)	22000
Rated torque		(N·m)	140
Continuous stall torque		(N·m)	140
Momentary Max. peak torque		(N·m)	350
Rated current		(A(rms))	80.9
Max. current		(A(o-p))	294
Regenerative brake frequency (times/min) Note)1	Without option		No limit Note)2
	DV0P4285×6		No limit Note)2
Rated rotational speed		(r/min)	1500
Max. rotational speed		(r/min)	2000
Moment of inertia of rotor ($\times 10^{-4}$ kg·m^2)	Without brake		431
	With brake		455
Recommended moment of inertia ratio of the load and the rotor Note)3			10 times or less
Rotary encoder specifications *3			23-bit Absolute
	Resolution per single turn		8388608

- **Brake specifications** (For details, refer to P.305)

(This brake will be released when it is energized. Do not use this for braking the motor in motion.)

Static friction torque (N·m)	200 or more
Engaging time (ms)	300 or less
Releasing time (ms) Note)4	150 or less
Exciting current (DC) (A)	1.72
Releasing voltage (DC) (V)	2 or more
Exciting voltage (DC) (V)	24±2.4

- **Permissible load** (For details, refer to P.304)

During assembly	Radial load P-direction (N)	4508
	Thrust load A-direction (N)	1470
	Thrust load B-direction (N)	2646
During operation	Radial load P-direction (N)	2254
	Thrust load A, B-direction (N)	686

- For details of Note)1 to Note)4, refer to P.303.
- Dimensions of Driver, refer to P.61.

*1 □□ in the motor part number represents the motor specifications.

*2 Basic type and RS485 communication type are "Position control type". Detail of model designation, refer to P.22.

*3 When using a rotary encoder as an incremental system (not using multi-turn data), do not connect a battery for absolute encoder.

Torque characteristics (at AC200 V of power voltage <Dotted line represents the torque at 10 % less supply voltage.>)

With oil seal

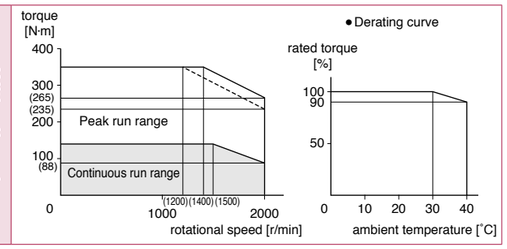

Dimensions

Motor specifications	Key way shaft/ Round shaft					
	without brake			with brake		
	without oil seal	with oil seal	with protective lip/ with oil seal	without oil seal	with oil seal	with protective lip/ with oil seal
Encoder connector Large size (JL10) type	—	P.192	—	—	P.192	—
Encoder connector Small size (JN2) type	—	P.193	—	—	P.193	—

<Cautions> Reduce the moment of inertia ratio if high speed response operation is required.
Dimensions are subject to change without notice. Contact us or a dealer for the latest information.
Read the Instruction Manual carefully and understand all precautions and remarks before using the products.

Specifications

			AC200 V
Motor model *1			MGMF092L1□□
Applicable driver	Model No.	Multifunction type	MDDLT45SF
		RS485 communication type *2	MDDLN45SG
		Basic type *2	MDDLN45SE
	Frame symbol		D-frame
Power supply capacity		(kVA)	2.0
Rated output		(W)	850
Rated torque		(N·m)	5.41
Continuous stall torque		(N·m)	5.41
Momentary Max. peak torque		(N·m)	14.3
Rated current		(A(rms))	5.9
Max. current		(A(o-p))	22
Regenerative brake frequency (times/min) Note)1	Without option		No limit Note)2
	DV0P4284		No limit Note)2
Rated rotational speed		(r/min)	1500
Max. rotational speed		(r/min)	3000
Moment of inertia of rotor ($\times 10^{-4}$ kg·m^2)	Without brake		6.18
	With brake		7.40
Recommended moment of inertia ratio of the load and the rotor Note)3			10 times or less
Rotary encoder specifications *3			23-bit Absolute
	Resolution per single turn		8388608

- **Brake specifications** (For details, refer to P.305)

(This brake will be released when it is energized. Do not use this for braking the motor in motion.)

Static friction torque (N·m)	13.7 or more
Engaging time (ms)	100 or less
Releasing time (ms) Note)4	50 or less
Exciting current (DC) (A)	0.79
Releasing voltage (DC) (V)	2 or more
Exciting voltage (DC) (V)	24±2.4

- **Permissible load** (For details, refer to P.304)

During assembly	Radial load P-direction (N)	980
	Thrust load A-direction (N)	588
	Thrust load B-direction (N)	686
During operation	Radial load P-direction (N)	686
	Thrust load A, B-direction (N)	196

- For details of Note)1 to Note)4, refer to P.303.
- Dimensions of Driver, refer to P.58.

*1 □□ in the motor part number represents the motor specifications.

*2 Basic type and RS485 communication type are "Position control type". Detail of model designation, refer to P.22.

*3 When using a rotary encoder as an incremental system (not using multi-turn data), do not connect a battery for absolute encoder.

Torque characteristics (at AC200 V of power voltage <Dotted line represents the torque at 10 % less supply voltage.>)

With oil seal

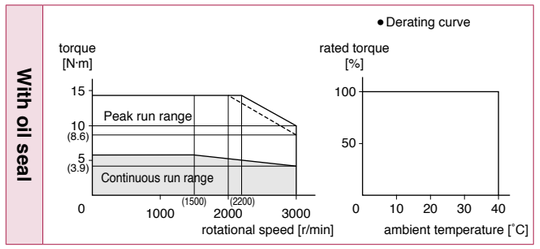

Dimensions

Motor specifications	Key way shaft/ Round shaft					
	without brake			with brake		
	without oil seal	with oil seal	with protective lip/ with oil seal	without oil seal	with oil seal	with protective lip/ with oil seal
Encoder connector Large size (JL10) type	—	P.193		—	P.194	
Encoder connector Small size (JN2) type	—	P.194		—	P.194	

<Cautions> Reduce the moment of inertia ratio if high speed response operation is required.
Dimensions are subject to change without notice. Contact us or a dealer for the latest information.
Read the Instruction Manual carefully and understand all precautions and remarks before using the products.

200 V MGMF 1.3 kW [Middle inertia Low speed/High torque type 130 mm sq.] IP67

Specifications

			AC200 V
Motor model *1			MGMF132L1□□
Applicable driver	Model No.	Multifunction type	MDDLT55SF
		RS485 communication type *2	MDDLN55SG
		Basic type *2	MDDLN55SE
	Frame symbol		D-frame
Power supply capacity		(kVA)	2.6
Rated output		(W)	1300
Rated torque		(N·m)	8.28
Continuous stall torque		(N·m)	8.28
Momentary Max. peak torque		(N·m)	23.3
Rated current		(A(rms))	9.3
Max. current		(A(o-p))	37
Regenerative brake frequency (times/min) Note)1	Without option		No limit Note)2
	DV0P4284		No limit Note)2
Rated rotational speed		(r/min)	1500
Max. rotational speed		(r/min)	3000
Moment of inertia of rotor ($\times 10^{-4}$ kg·m^2)	Without brake		9.16
	With brake		10.4
Recommended moment of inertia ratio of the load and the rotor Note)3			10 times or less
Rotary encoder specifications *3			23-bit Absolute
	Resolution per single turn		8388608

- **Brake specifications** (For details, refer to P.305)

(This brake will be released when it is energized. Do not use this for braking the motor in motion.)

Static friction torque (N·m)	13.7 or more
Engaging time (ms)	100 or less
Releasing time (ms) Note)4	50 or less
Exciting current (DC) (A)	0.79
Releasing voltage (DC) (V)	2 or more
Exciting voltage (DC) (V)	24±2.4

- **Permissible load** (For details, refer to P.304)

During assembly	Radial load P-direction (N)	980
	Thrust load A-direction (N)	588
	Thrust load B-direction (N)	686
During operation	Radial load P-direction (N)	686
	Thrust load A, B-direction (N)	196

- For details of Note)1 to Note)4, refer to P.303.
- Dimensions of Driver, refer to P.58.

*1 □□ in the motor part number represents the motor specifications.

*2 Basic type and RS485 communication type are "Position control type". Detail of model designation, refer to P.22.

*3 When using a rotary encoder as an incremental system (not using multi-turn data), do not connect a battery for absolute encoder.

Torque characteristics (at AC200 V of power voltage <Dotted line represents the torque at 10 % less supply voltage.>)

With oil seal

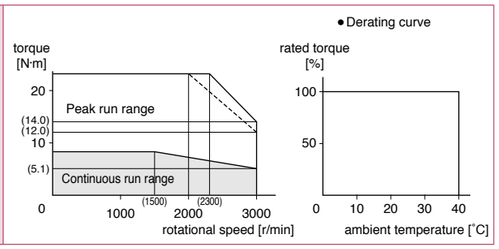

Dimensions

Motor specifications	Key way shaft/ Round shaft					
	without brake			with brake		
	without oil seal	with oil seal	with protective lip/ with oil seal	without oil seal	with oil seal	with protective lip/ with oil seal
Encoder connector Large size (JL10) type	—	P.195		—	P.195	
Encoder connector Small size (JN2) type	—	P.195		—	P.196	

<Cautions> Reduce the moment of inertia ratio if high speed response operation is required.
Dimensions are subject to change without notice. Contact us or a dealer for the latest information.
Read the Instruction Manual carefully and understand all precautions and remarks before using the products.

Specifications

			AC200 V
Motor model *1			MGMF182L1□□
Applicable driver	Model No.	Multifunction type	MEDLT83SF
		RS485 communication type *2	MEDLN83SG
		Basic type *2	MEDLN83SE
	Frame symbol		E-frame
Power supply capacity		(kVA)	3.4
Rated output		(W)	1800
Rated torque		(N·m)	11.5
Continuous stall torque		(N·m)	11.5
Momentary Max. peak torque		(N·m)	28.7
Rated current		(A(rms))	11.8
Max. current		(A(o-p))	42
Regenerative brake frequency (times/min) Note)1	Without option		No limit Note)2
	DV0P4285×2		No limit Note)2
Rated rotational speed		(r/min)	1500
Max. rotational speed		(r/min)	3000
Moment of inertia of rotor ($\times 10^{-4}$ kg·m^2)	Without brake		12.1
	With brake		13.3
Recommended moment of inertia ratio of the load and the rotor Note)3			10 times or less
Rotary encoder specifications *3			23-bit Absolute
	Resolution per single turn		8388608

- **Brake specifications** (For details, refer to P.305)

(This brake will be released when it is energized. Do not use this for braking the motor in motion.)

Static friction torque (N·m)	13.7 or more
Engaging time (ms)	100 or less
Releasing time (ms) Note)4	50 or less
Exciting current (DC) (A)	0.79
Releasing voltage (DC) (V)	2 or more
Exciting voltage (DC) (V)	24±2.4

- **Permissible load** (For details, refer to P.304)

During assembly	Radial load P-direction (N)	980
	Thrust load A-direction (N)	588
	Thrust load B-direction (N)	686
During operation	Radial load P-direction (N)	686
	Thrust load A, B-direction (N)	196

- For details of Note)1 to Note)4, refer to P.303.
- Dimensions of Driver, refer to P.59.

*1 □□ in the motor part number represents the motor specifications.

*2 Basic type and RS485 communication type are "Position control type". Detail of model designation, refer to P.22.

*3 When using a rotary encoder as an incremental system (not using multi-turn data), do not connect a battery for absolute encoder.

Torque characteristics (at AC200 V of power voltage <Dotted line represents the torque at 10 % less supply voltage.>)

With oil seal

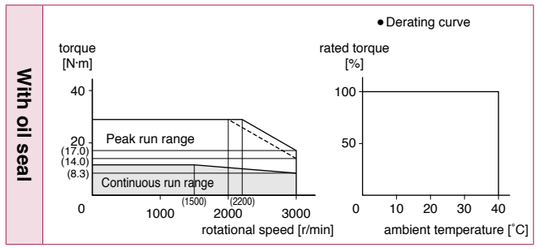

Dimensions

Motor specifications	Key way shaft/ Round shaft					
	without brake			with brake		
	without oil seal	with oil seal	with protective lip/ with oil seal	without oil seal	with oil seal	with protective lip/ with oil seal
Encoder connector Large size (JL10) type	—	P.196		—	P.196	
Encoder connector Small size (JN2) type	—	P.197		—	P.197	

<Cautions> Reduce the moment of inertia ratio if high speed response operation is required.
Dimensions are subject to change without notice. Contact us or a dealer for the latest information.
Read the Instruction Manual carefully and understand all precautions and remarks before using the products.

200 V MGMF 2.4 kW [Middle inertia Low speed/High torque type 176 mm sq.] IP67

Specifications

			AC200 V
Motor model *1			MGMF242L1□□
Applicable driver	Model No.	Multifunction type	MEDLT93SF
		RS485 communication type *2	MEDLN93SG
		Basic type *2	MEDLN93SE
	Frame symbol		E-frame
Power supply capacity		(kVA)	4.5
Rated output		(W)	2400
Rated torque		(N·m)	15.3
Continuous stall torque		(N·m)	15.3
Momentary Max. peak torque		(N·m)	45.2
Rated current		(A(rms))	16.0
Max. current		(A(o-p))	67
Regenerative brake frequency (times/min) Note)1	Without option		No limit Note)2
	DV0P4285×2		No limit Note)2
Rated rotational speed		(r/min)	1500
Max. rotational speed		(r/min)	3000
Moment of inertia of rotor (×10^{-4} kg·m^2)	Without brake		46.9
	With brake		52.3
Recommended moment of inertia ratio of the load and the rotor Note)3			10 times or less
Rotary encoder specifications *3			23-bit Absolute
	Resolution per single turn		8388608

- **Brake specifications** (For details, refer to P.305)

(This brake will be released when it is energized. Do not use this for braking the motor in motion.)

Static friction torque (N·m)	25.0 or more
Engaging time (ms)	80 or less
Releasing time (ms) Note)4	25 or less
Exciting current (DC) (A)	1.29
Releasing voltage (DC) (V)	2 or more
Exciting voltage (DC) (V)	24±2.4

- **Permissible load** (For details, refer to P.304)

During assembly	Radial load P-direction (N)	1666
	Thrust load A-direction (N)	784
	Thrust load B-direction (N)	980
During operation	Radial load P-direction (N)	1176
	Thrust load A, B-direction (N)	490

- For details of Note)1 to Note)4, refer to P.303.
- Dimensions of Driver, refer to P.59.

*1 □□ in the motor part number represents the motor specifications.

*2 Basic type and RS485 communication type are "Position control type". Detail of model designation, refer to P.22.

*3 When using a rotary encoder as an incremental system (not using multi-turn data), do not connect a battery for absolute encoder.

Torque characteristics (at AC200 V of power voltage <Dotted line represents the torque at 10 % less supply voltage.>)

With oil seal

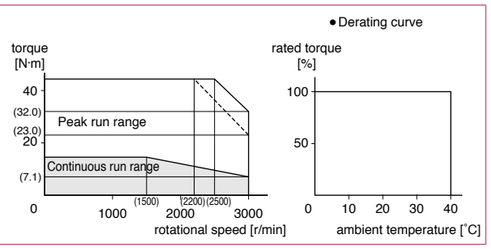

Dimensions

Motor specifications	Key way shaft/ Round shaft					
	without brake			with brake		
	without oil seal	with oil seal	with protective lip/ with oil seal	without oil seal	with oil seal	with protective lip/ with oil seal
Encoder connector Large size (JL10) type	—	P.197		—	P.198	
Encoder connector Small size (JN2) type	—	P.198		—	P.198	

<Cautions> Reduce the moment of inertia ratio if high speed response operation is required.
Dimensions are subject to change without notice. Contact us or a dealer for the latest information.
Read the Instruction Manual carefully and understand all precautions and remarks before using the products.

Specifications

			AC200 V
Motor model *1			MGMF292L1□□
Applicable driver	Model No.	Multifunction type	MFDLTB3SF
		RS485 communication type *2	MFDLNB3SG
		Basic type *2	MFDLNB3SE
	Frame symbol		F-frame
Power supply capacity		(kVA)	5.0
Rated output		(W)	2900
Rated torque		(N·m)	18.5
Continuous stall torque		(N·m)	18.5
Momentary Max. peak torque		(N·m)	45.2
Rated current		(A(rms))	19.3
Max. current		(A(o-p))	67
Regenerative brake frequency (times/min) Note)1	Without option		No limit Note)2
	DV0P4285×2		No limit Note)2
Rated rotational speed		(r/min)	1500
Max. rotational speed		(r/min)	3000
Moment of inertia of rotor (×10^{-4} kg·m^2)	Without brake		46.9
	With brake		52.3
Recommended moment of inertia ratio of the load and the rotor Note)3			10 times or less
Rotary encoder specifications *3			23-bit Absolute
	Resolution per single turn		8388608

- **Brake specifications** (For details, refer to P.305)

(This brake will be released when it is energized. Do not use this for braking the motor in motion.)

Static friction torque (N·m)	25.0 or more
Engaging time (ms)	80 or less
Releasing time (ms) Note)4	25 or less
Exciting current (DC) (A)	1.29
Releasing voltage (DC) (V)	2 or more
Exciting voltage (DC) (V)	24±2.4

- **Permissible load** (For details, refer to P.304)

During assembly	Radial load P-direction (N)	1666
	Thrust load A-direction (N)	784
	Thrust load B-direction (N)	980
During operation	Radial load P-direction (N)	1176
	Thrust load A, B-direction (N)	490

- For details of Note)1 to Note)4, refer to P.303.
- Dimensions of Driver, refer to P.59.

*1 □□ in the motor part number represents the motor specifications.

*2 Basic type and RS485 communication type are "Position control type". Detail of model designation, refer to P.22.

*3 When using a rotary encoder as an incremental system (not using multi-turn data), do not connect a battery for absolute encoder.

Torque characteristics (at AC200 V of power voltage <Dotted line represents the torque at 10 % less supply voltage.>)

With oil seal

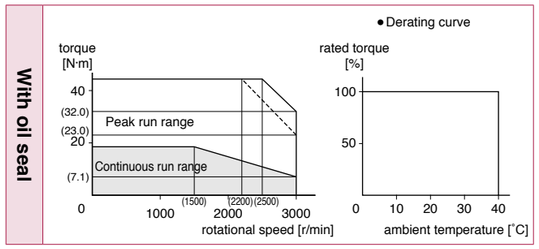

Dimensions

Motor specifications	Key way shaft/ Round shaft					
	without brake			with brake		
	without oil seal	with oil seal	with protective lip/ with oil seal	without oil seal	with oil seal	with protective lip/ with oil seal
Encoder connector Large size (JL10) type	—	P.199		—	P.199	
Encoder connector Small size (JN2) type	—	P.199		—	P.200	

<Cautions> Reduce the moment of inertia ratio if high speed response operation is required.
Dimensions are subject to change without notice. Contact us or a dealer for the latest information.
Read the Instruction Manual carefully and understand all precautions and remarks before using the products.

200 V MGMF 4.4 kW [Middle inertia Low speed/High torque type 176 mm sq.] IP67

Specifications

			AC200 V
Motor model *1			MGMF442L1□□
Applicable driver	Model No.	Multifunction type	MFDLTB3SF
		RS485 communication type *2	MFDLNB3SG
		Basic type *2	MFDLNB3SE
	Frame symbol		F-frame
Power supply capacity (kVA)			7.0
Rated output (W)			4400
Rated torque (N·m)			28.0
Continuous stall torque (N·m)			28.0
Momentary Max. peak torque (N·m)			70.0
Rated current (A(rms))			27.2
Max. current (A(o-p))			96
Regenerative brake frequency (times/min) Note)1		Without option	No limit Note)2
		DV0P4285×2	No limit Note)2
Rated rotational speed (r/min)			1500
Max. rotational speed (r/min)			3000
Moment of inertia of rotor ($\times 10^{-4}$ kg·m^2)		Without brake	58.2
		With brake	63.0
Recommended moment of inertia ratio of the load and the rotor Note)3			10 times or less
Rotary encoder specifications *3			23-bit Absolute
	Resolution per single turn		8388608

• Brake specifications (For details, refer to P.305)

(This brake will be released when it is energized. Do not use this for braking the motor in motion.)

Static friction torque (N·m)	44.1 or more
Engaging time (ms)	150 or less
Releasing time (ms) Note)4	30 or less
Exciting current (DC) (A)	1.29
Releasing voltage (DC) (V)	2 or more
Exciting voltage (DC) (V)	24±2.4

• Permissible load (For details, refer to P.304)

During assembly	Radial load P-direction (N)	1666
	Thrust load A-direction (N)	784
	Thrust load B-direction (N)	980
During operation	Radial load P-direction (N)	1470
	Thrust load A, B-direction (N)	490

- For details of Note)1 to Note)4, refer to P.303.
- Dimensions of Driver, refer to P.59.

*1 □□ in the motor part number represents the motor specifications.

*2 Basic type and RS485 communication type are "Position control type". Detail of model designation, refer to P.22.

*3 When using a rotary encoder as an incremental system (not using multi-turn data), do not connect a battery for absolute encoder.

Torque characteristics (at AC200 V of power voltage <Dotted line represents the torque at 10 % less supply voltage.>)

With oil seal

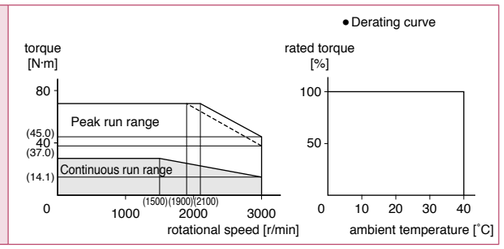

Dimensions

Motor specifications	Key way shaft/ Round shaft					
	without brake			with brake		
	without oil seal	with oil seal	with protective lip/ with oil seal	without oil seal	with oil seal	with protective lip/ with oil seal
Encoder connector Large size (JL10) type	—	P.200		—	P.200	
Encoder connector Small size (JN2) type	—	P.201		—	P.201	

<Cautions> Reduce the moment of inertia ratio if high speed response operation is required.
Dimensions are subject to change without notice. Contact us or a dealer for the latest information.
Read the Instruction Manual carefully and understand all precautions and remarks before using the products.

Specifications

			AC200 V
Motor model *1			MGMF552L1□□
Applicable driver	Model No.	Multifunction type	MGDLTC3SF
		RS485 communication type *2	—
		Basic type *2	—
	Frame symbol		G-frame
Power supply capacity (kVA)			8.5
Rated output (W)			5500
Rated torque (N·m)			35.0
Continuous stall torque (N·m)			35.0
Momentary Max. peak torque (N·m)			102
Rated current (A(rms))			39.8
Max. current (A(o-p))			164
Regenerative brake frequency (times/min) Note)1		Without option	No limit Note)2
		DV0P4285×3	No limit Note)2
Rated rotational speed (r/min)			1500
Max. rotational speed (r/min)			3000
Moment of inertia of rotor ($\times 10^{-4}$ kg·m^2)		Without brake	83.0
		With brake	88.0
Recommended moment of inertia ratio of the load and the rotor Note)3			10 times or less
Rotary encoder specifications *3			23-bit Absolute
	Resolution per single turn		8388608

• Brake specifications (For details, refer to P.305)

(This brake will be released when it is energized. Do not use this for braking the motor in motion.)

Static friction torque (N·m)	63.0 or more
Engaging time (ms)	200 or less
Releasing time (ms) Note)4	80 or less
Exciting current (DC) (A)	1.29
Releasing voltage (DC) (V)	2 or more
Exciting voltage (DC) (V)	24±2.4

• Permissible load (For details, refer to P.304)

During assembly	Radial load P-direction (N)	2058
	Thrust load A-direction (N)	980
	Thrust load B-direction (N)	1176
During operation	Radial load P-direction (N)	1176
	Thrust load A, B-direction (N)	490

- For details of Note)1 to Note)4, refer to P.303.
- Dimensions of Driver, refer to P.60.

*1 □□ in the motor part number represents the motor specifications.

*2 Basic type and RS485 communication type are "Position control type". Detail of model designation, refer to P.22.

*3 When using a rotary encoder as an incremental system (not using multi-turn data), do not connect a battery for absolute encoder.

Torque characteristics (at AC200 V of power voltage <Dotted line represents the torque at 10 % less supply voltage.>)

With oil seal

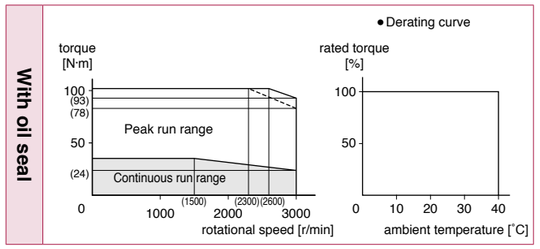

Dimensions

Motor specifications	Key way shaft/ Round shaft					
	without brake			with brake		
	without oil seal	with oil seal	with protective lip/ with oil seal	without oil seal	with oil seal	with protective lip/ with oil seal
Encoder connector Large size (JL10) type	—	P.201	—	—	P.202	—
Encoder connector Small size (JN2) type	—	P.202	—	—	P.202	—

<Cautions> Reduce the moment of inertia ratio if high speed response operation is required.
Dimensions are subject to change without notice. Contact us or a dealer for the latest information.
Read the Instruction Manual carefully and understand all precautions and remarks before using the products.

MSMF 50 W

Leadwire type (IP65) · without brake · without/with oil seal · Round shaft/ Key way, center tap shaft

① Encoder connector
② Motor connector

Mass: 0.32 kg

● Motor model

Power supply	Shaft	without oil seal	with oil seal
100 V	Round	MSMF5AZL1A2	MSMF5AZL1C2
	Key-way, center tap	MSMF5AZL1S2	MSMF5AZL1U2
200 V	Round	MSMF5AZL1A2	MSMF5AZL1C2
	Key-way, center tap	MSMF5AZL1S2	MSMF5AZL1U2

● Dimensions are subject to change without notice. Contact us or a dealer for the latest information.

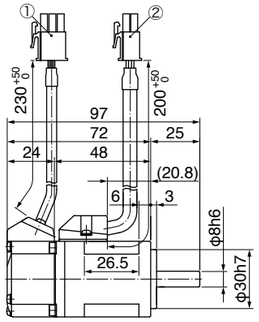

[* Use hexagon socket head screw for installation.]

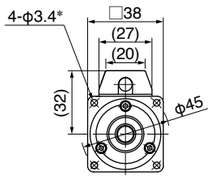

Key way dimensions
<Key way, center tap shaft>

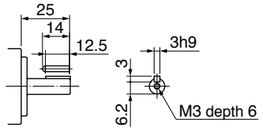

[Unit: mm]

Leadwire type (IP65) · with brake · without/with oil seal · Round shaft/ Key way, center tap shaft

① Encoder connector
② Brake connector
③ Motor connector

Mass: 0.53 kg

● Motor model

Power supply	Shaft	without oil seal	with oil seal
100 V	Round	MSMF5AZL1B2	MSMF5AZL1D2
	Key-way, center tap	MSMF5AZL1T2	MSMF5AZL1V2
200 V	Round	MSMF5AZL1B2	MSMF5AZL1D2
	Key-way, center tap	MSMF5AZL1T2	MSMF5AZL1V2

● Dimensions are subject to change without notice. Contact us or a dealer for the latest information.

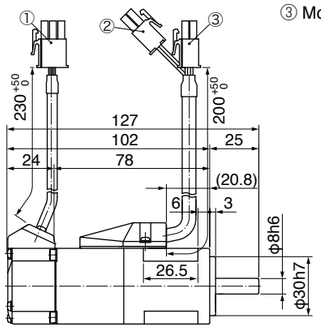

[* Use hexagon socket head screw for installation.]

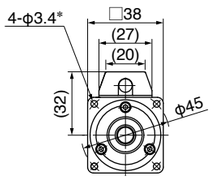

Key way dimensions
<Key way, center tap shaft>

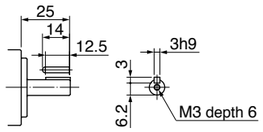

[Unit: mm]

Connector type (IP67) · without brake · without/with oil seal · Round shaft/ Key way, center tap shaft

① Encoder connector
② Motor connector

Mass: 0.32 kg

● Motor model

Power supply	Shaft	without oil seal	with oil seal
100 V	Round	MSMF5AZL1A1	MSMF5AZL1C1
	Key-way, center tap	MSMF5AZL1S1	MSMF5AZL1U1
200 V	Round	MSMF5AZL1A1	MSMF5AZL1C1
	Key-way, center tap	MSMF5AZL1S1	MSMF5AZL1U1

● Dimensions are subject to change without notice. Contact us or a dealer for the latest information.

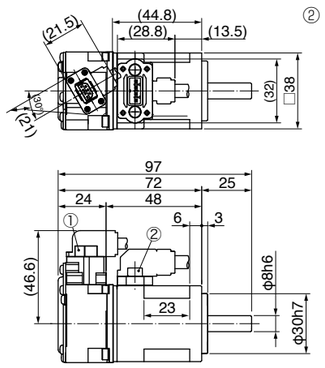

[* Use hexagon socket head screw for installation.]

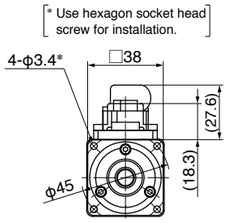

Key way dimensions
<Key way, center tap shaft>

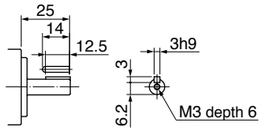

[Unit: mm]

* For motors specifications, refer to P.63, P.64.

MSMF 50 W

Connector type (IP67) · with brake · without/with oil seal · Round shaft/ Key way, center tap shaft

① Encoder connector
② Brake connector
③ Motor connector

Mass: 0.53 kg

● Motor model

Power supply	Shaft	without oil seal	with oil seal
100 V	Round	MSMF5AZL1B1	MSMF5AZL1D1
	Key-way, center tap	MSMF5AZL1T1	MSMF5AZL1V1
200 V	Round	MSMF5AZL1B1	MSMF5AZL1D1
	Key-way, center tap	MSMF5AZL1T1	MSMF5AZL1V1

● Dimensions are subject to change without notice. Contact us or a dealer for the latest information.

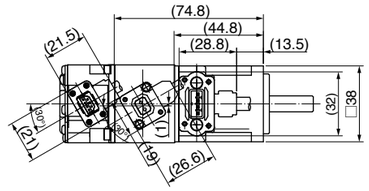

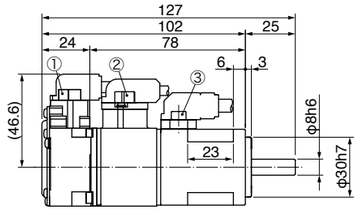

[* Use hexagon socket head screw for installation.]

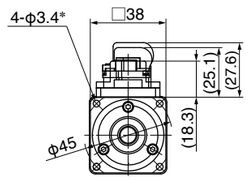

Key way dimensions
<Key way, center tap shaft>

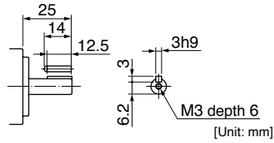

[Unit: mm]

MSMF 100 W

Leadwire type (IP65) · without brake · without/with oil seal · Round shaft/ Key way, center tap shaft

① Encoder connector
② Motor connector

Mass: 0.47 kg

● Motor model

Power supply	Shaft	without oil seal	with oil seal
100 V	Round	MSMF011L1A2	MSMF011L1C2
	Key-way, center tap	MSMF011L1S2	MSMF011L1U2
200 V	Round	MSMF012L1A2	MSMF012L1C2
	Key-way, center tap	MSMF012L1S2	MSMF012L1U2

● Dimensions are subject to change without notice. Contact us or a dealer for the latest information.

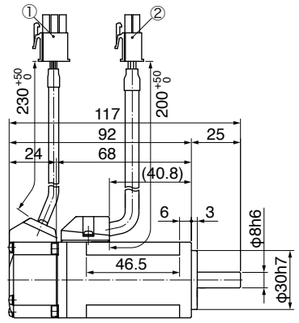

[* Use hexagon socket head screw for installation.]

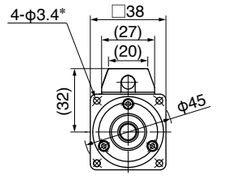

Key way dimensions
<Key way, center tap shaft>

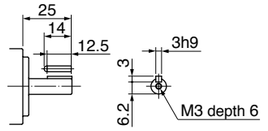

[Unit: mm]

Leadwire type (IP65) · with brake · without/with oil seal · Round shaft/ Key way, center tap shaft

① Encoder connector
② Brake connector
③ Motor connector

Mass: 0.68 kg

● Motor model

Power supply	Shaft	without oil seal	with oil seal
100 V	Round	MSMF011L1B2	MSMF011L1D2
	Key-way, center tap	MSMF011L1T2	MSMF011L1V2
200 V	Round	MSMF012L1B2	MSMF012L1D2
	Key-way, center tap	MSMF012L1T2	MSMF012L1V2

● Dimensions are subject to change without notice. Contact us or a dealer for the latest information.

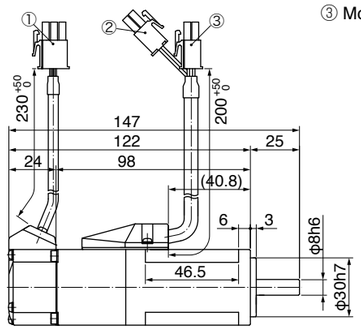

[* Use hexagon socket head screw for installation.]

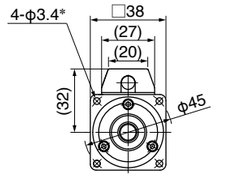

Key way dimensions
<Key way, center tap shaft>

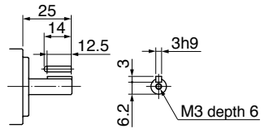

[Unit: mm]

* For motors specifications, refer to P.63 to P.66.

MSMF 100 W

Connector type (IP67) · without brake · without/with oil seal · Round shaft/ Key way, center tap shaft

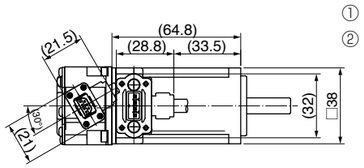

① Encoder connector
② Motor connector

Mass: 0.47 kg

● Motor model

Power supply	Shaft	without oil seal	with oil seal
100 V	Round	MSMF011L1A1	MSMF011L1C1
	Key-way, center tap	MSMF011L1S1	MSMF011L1U1
200 V	Round	MSMF012L1A1	MSMF012L1C1
	Key-way, center tap	MSMF012L1S1	MSMF012L1U1

● Dimensions are subject to change without notice. Contact us or a dealer for the latest information.

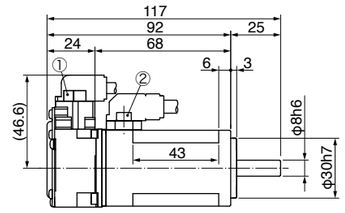

[* Use hexagon socket head screw for installation.]

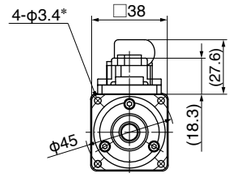

Key way dimensions
<Key way, center tap shaft>

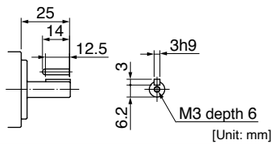

[Unit: mm]

Connector type (IP67) · with brake · without/with oil seal · Round shaft/ Key way, center tap shaft

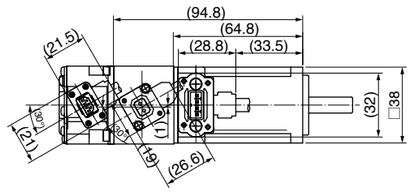

① Encoder connector
② Brake connector
③ Motor connector

Mass: 0.68 kg

● Motor model

Power supply	Shaft	without oil seal	with oil seal
100 V	Round	MSMF011L1B1	MSMF011L1D1
	Key-way, center tap	MSMF011L1T1	MSMF011L1V1
200 V	Round	MSMF012L1B1	MSMF012L1D1
	Key-way, center tap	MSMF012L1T1	MSMF012L1V1

● Dimensions are subject to change without notice. Contact us or a dealer for the latest information.

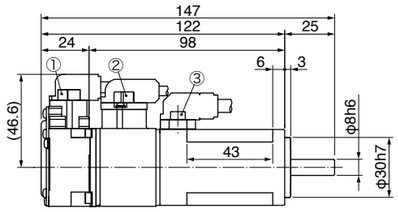

[* Use hexagon socket head screw for installation.]

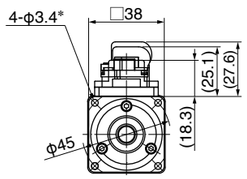

Key way dimensions
<Key way, center tap shaft>

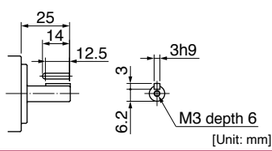

[Unit: mm]

MSMF 200 W

Leadwire type (IP65) · without brake · without/with oil seal · Round shaft/ Key way, center tap shaft

① Encoder connector
② Motor connector

Mass: 0.82 kg

● Motor model

Power supply	Shaft	without oil seal	with oil seal
100 V	Round	MSMF021L1A2	MSMF021L1C2
	Key-way, center tap	MSMF021L1S2	MSMF021L1U2
200 V	Round	MSMF022L1A2	MSMF022L1C2
	Key-way, center tap	MSMF022L1S2	MSMF022L1U2

● Dimensions are subject to change without notice. Contact us or a dealer for the latest information.

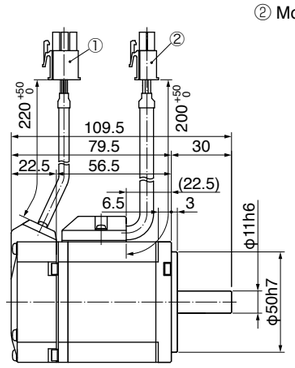

[* Use hexagon socket head screw for installation.]

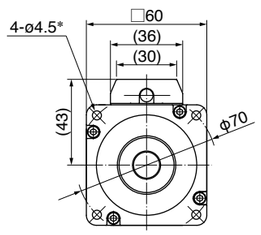

Key way dimensions
<Key way, center tap shaft>

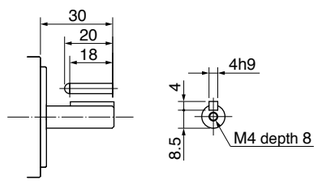

[Unit: mm]

* For motors specifications, refer to P.65 to P.68.

MSMF 200 W

Leadwire type (IP65) · with brake · without/with oil seal · Round shaft/ Key way, center tap shaft

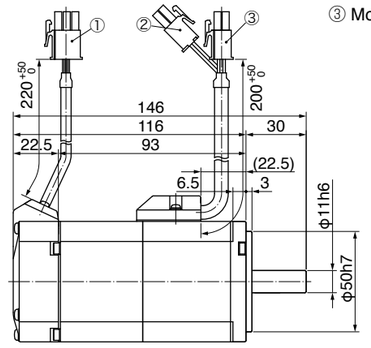

① Encoder connector
② Brake connector
③ Motor connector

[* Use hexagon socket head screw for installation.]

Mass: 1.3 kg

● Motor model

Power supply	Shaft	without oil seal	with oil seal
100 V	Round	MSMF021L1B2	MSMF021L1D2
	Key-way, center tap	MSMF021L1T2	MSMF021L1V2
200 V	Round	MSMF022L1B2	MSMF022L1D2
	Key-way, center tap	MSMF022L1T2	MSMF022L1V2

● Dimensions are subject to change without notice. Contact us or a dealer for the latest information.

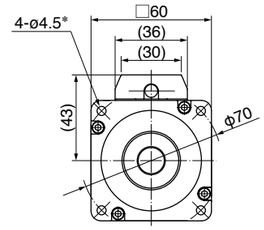

Key way dimensions
<Key way, center tap shaft>

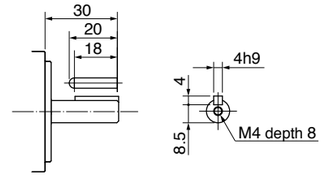

[Unit: mm]

Connector type (IP67) · without brake · without/with oil seal · Round shaft/ Key way, center tap shaft

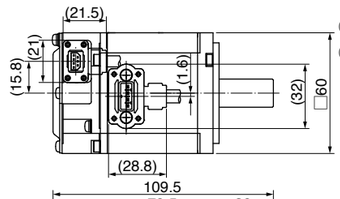

① Encoder connector
② Motor connector

[* Use hexagon socket head screw for installation.]

Mass: 0.82 kg

● Motor model

Power supply	Shaft	without oil seal	with oil seal
100 V	Round	MSMF021L1A1	MSMF021L1C1
	Key-way, center tap	MSMF021L1S1	MSMF021L1U1
200 V	Round	MSMF022L1A1	MSMF022L1C1
	Key-way, center tap	MSMF022L1S1	MSMF022L1U1

● Dimensions are subject to change without notice. Contact us or a dealer for the latest information.

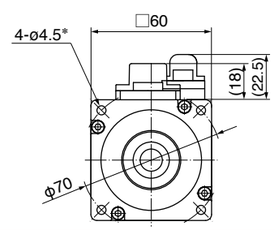

Key way dimensions
<Key way, center tap shaft>

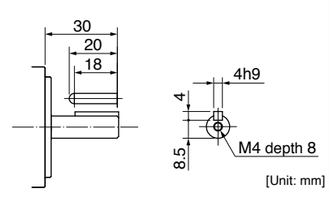

[Unit: mm]

Connector type (IP67) · with brake · without/with oil seal · Round shaft/ Key way, center tap shaft

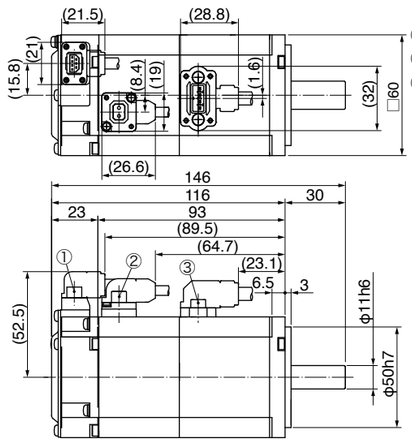

① Encoder connector
② Brake connector
③ Motor connector

[* Use hexagon socket head screw for installation.]

Mass: 1.3 kg

● Motor model

Power supply	Shaft	without oil seal	with oil seal
100 V	Round	MSMF021L1B1	MSMF021L1D1
	Key-way, center tap	MSMF021L1T1	MSMF021L1V1
200 V	Round	MSMF022L1B1	MSMF022L1D1
	Key-way, center tap	MSMF022L1T1	MSMF022L1V1

● Dimensions are subject to change without notice. Contact us or a dealer for the latest information.

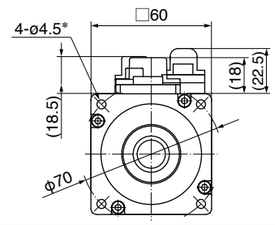

Key way dimensions
<Key way, center tap shaft>

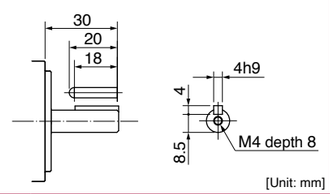

[Unit: mm]

* For motors specifications, refer to P.67, P.68.

MSMF 400 W

Leadwire type (IP65) · without brake · without/with oil seal · Round shaft/ Key way, center tap shaft

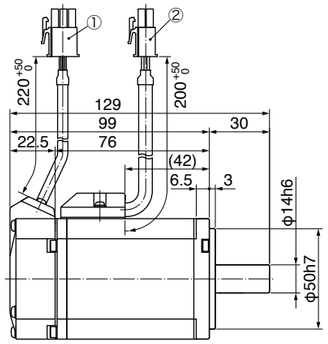

① Encoder connector
② Motor connector

* Use hexagon socket head screw for installation.

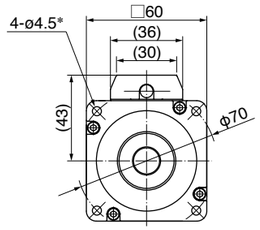

Key way dimensions
<Key way, center tap shaft>

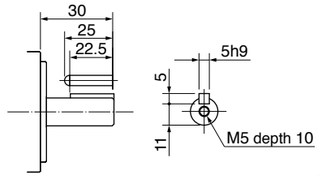

● Motor model — Mass: 1.2 kg

Power supply	Shaft	without oil seal	with oil seal
100 V	Round	MSMF041L1A2	MSMF041L1C2
	Key-way, center tap	MSMF041L1S2	MSMF041L1U2
200 V	Round	MSMF042L1A2	MSMF042L1C2
	Key-way, center tap	MSMF042L1S2	MSMF042L1U2

● Dimensions are subject to change without notice. Contact us or a dealer for the latest information.

[Unit: mm]

Leadwire type (IP65) · with brake · without/with oil seal · Round shaft/ Key way, center tap shaft

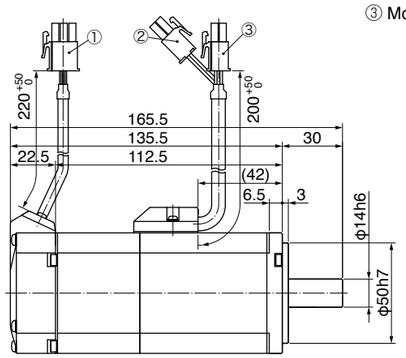

① Encoder connector
② Brake connector
③ Motor connector

* Use hexagon socket head screw for installation.

Key way dimensions
<Key way, center tap shaft>

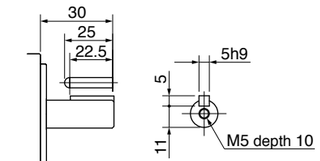

● Motor model — Mass: 1.7 kg

Power supply	Shaft	without oil seal	with oil seal
100 V	Round	MSMF041L1B2	MSMF041L1D2
	Key-way, center tap	MSMF041L1T2	MSMF041L1V2
200 V	Round	MSMF042L1B2	MSMF042L1D2
	Key-way, center tap	MSMF042L1T2	MSMF042L1V2

● Dimensions are subject to change without notice. Contact us or a dealer for the latest information.

[Unit: mm]

Connector type (IP67) · without brake · without/with oil seal · Round shaft/ Key way, center tap shaft

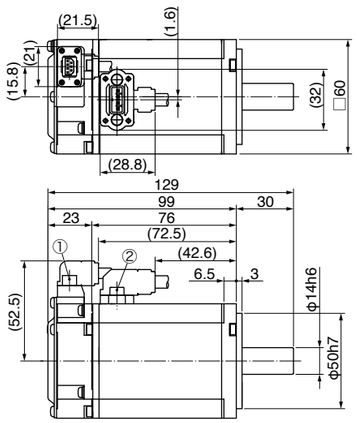

① Encoder connector
② Motor connector

* Use hexagon socket head screw for installation.

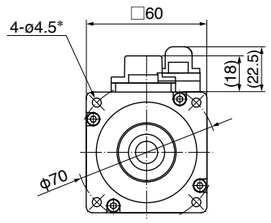

Key way dimensions
<Key way, center tap shaft>

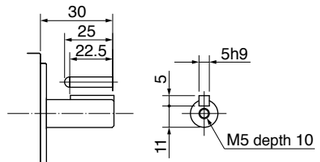

● Motor model — Mass: 1.2 kg

Power supply	Shaft	without oil seal	with oil seal
100 V	Round	MSMF041L1A1	MSMF041L1C1
	Key-way, center tap	MSMF041L1S1	MSMF041L1U1
200 V	Round	MSMF042L1A1	MSMF042L1C1
	Key-way, center tap	MSMF042L1S1	MSMF042L1U1

● Dimensions are subject to change without notice. Contact us or a dealer for the latest information.

[Unit: mm]

* For motors specifications, refer to P.69, P.70.

MSMF 400 W

Connector type (IP67) · with brake · without/with oil seal · Round shaft/ Key way, center tap shaft

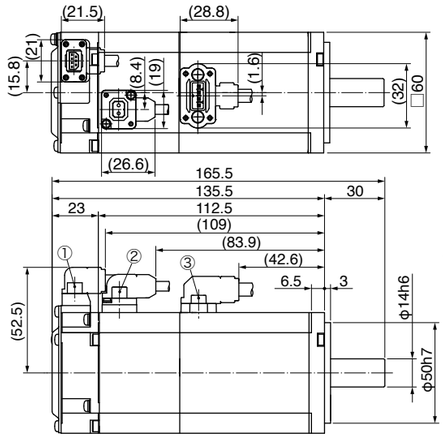

① Encoder connector
② Brake connector
③ Motor connector

* Use hexagon socket head screw for installation.

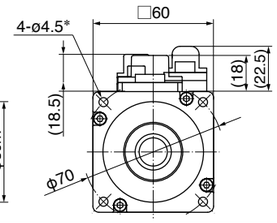

Key way dimensions
<Key way, center tap shaft>

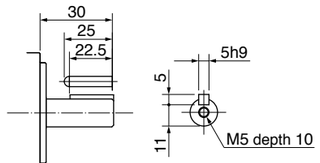

● Motor model — Mass: 1.7 kg

Power supply	Shaft	without oil seal	with oil seal
100 V	Round	MSMF041L1B1	MSMF041L1D1
	Key-way, center tap	MSMF041L1T1	MSMF041L1V1
200 V	Round	MSMF042L1B1	MSMF042L1D1
	Key-way, center tap	MSMF042L1T1	MSMF042L1V1

● Dimensions are subject to change without notice. Contact us or a dealer for the latest information.

[Unit: mm]

MSMF 750 W

Leadwire type (IP65) · without brake · without/with oil seal · Round shaft/ Key way, center tap shaft

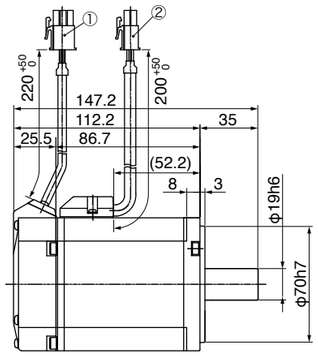

① Encoder connector
② Motor connector

* Use hexagon socket head screw for installation.

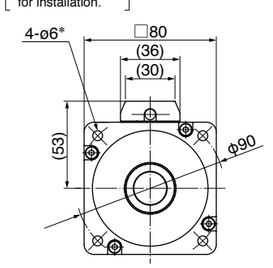

Key way dimensions
<Key way, center tap shaft>

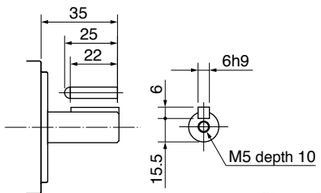

● Motor model — Mass: 2.3 kg

Power supply	Shaft	without oil seal	with oil seal
200 V	Round	MSMF082L1A2	MSMF082L1C2
	Key-way, center tap	MSMF082L1S2	MSMF082L1U2

● Dimensions are subject to change without notice. Contact us or a dealer for the latest information.

[Unit: mm]

Leadwire type (IP65) · with brake · without/with oil seal · Round shaft/ Key way, center tap shaft

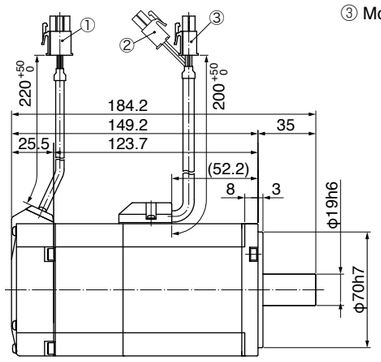

① Encoder connector
② Brake connector
③ Motor connector

* Use hexagon socket head screw for installation.

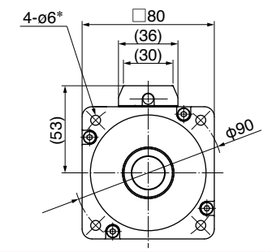

Key way dimensions
<Key way, center tap shaft>

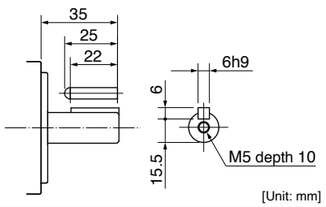

● Motor model — Mass: 3.1 kg

Power supply	Shaft	without oil seal	with oil seal
200 V	Round	MSMF082L1B2	MSMF082L1D2
	Key-way, center tap	MSMF082L1T2	MSMF082L1V2

● Dimensions are subject to change without notice. Contact us or a dealer for the latest information.

[Unit: mm]

* For motors specifications, refer to P.69 to P.71.

MSMF 750 W

Connector type (IP67) · without brake · without/with oil seal · Round shaft/ Key way, center tap shaft

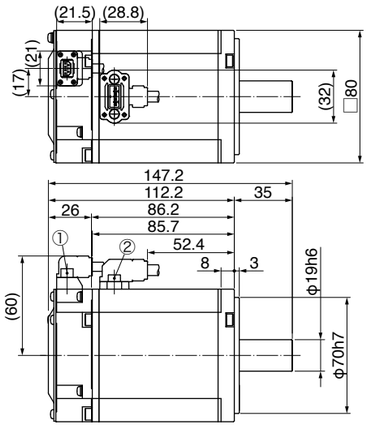

① Encoder connector
② Motor connector

* Use hexagon socket head screw for installation.

● Motor model — Mass: 2.3 kg

Power supply	Shaft	without oil seal	with oil seal
200 V	Round	MSMF082L1A1	MSMF082L1C1
	Key-way, center tap	MSMF082L1S1	MSMF082L1U1

● Dimensions are subject to change without notice. Contact us or a dealer for the latest information.

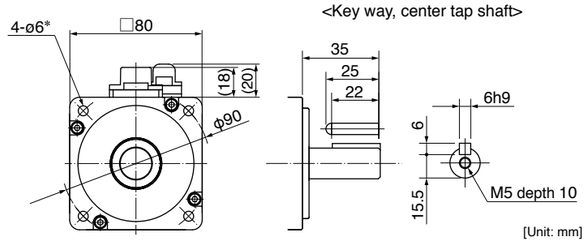

Key way dimensions
<Key way, center tap shaft>

[Unit: mm]

Connector type (IP67) · with brake · without/with oil seal · Round shaft/ Key way, center tap shaft

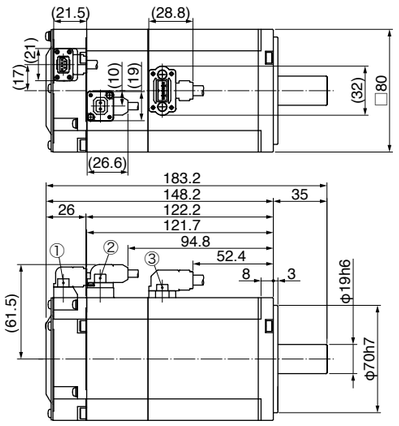

① Encoder connector
② Brake connector
③ Motor connector

* Use hexagon socket head screw for installation.

● Motor model — Mass: 3.1 kg

Power supply	Shaft	without oil seal	with oil seal
200 V	Round	MSMF082L1B1	MSMF082L1D1
	Key-way, center tap	MSMF082L1T1	MSMF082L1V1

● Dimensions are subject to change without notice. Contact us or a dealer for the latest information.

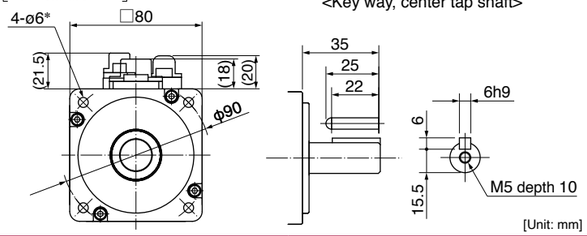

Key way dimensions
<Key way, center tap shaft>

[Unit: mm]

MSMF 1000 W

Leadwire type (IP65) · without brake · without/with oil seal · Round shaft/ Key way, center tap shaft

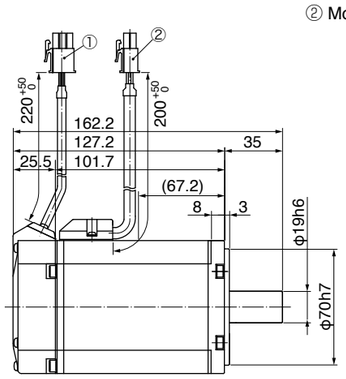

① Encoder connector
② Motor connector

* Use hexagon socket head screw for installation.

● Motor model — Mass: 2.8 kg

Power supply	Shaft	without oil seal	with oil seal
200 V	Round	MSMF092L1A2	MSMF092L1C2
	Key-way, center tap	MSMF092L1S2	MSMF092L1U2

● Dimensions are subject to change without notice. Contact us or a dealer for the latest information.

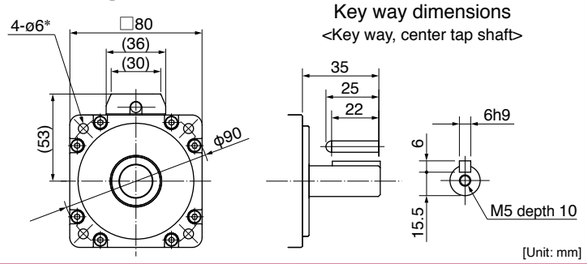

Key way dimensions
<Key way, center tap shaft>

[Unit: mm]

* For motors specifications, refer to P.71, P.72.

MSMF 1000 W

Leadwire type (IP65) · with brake · without/with oil seal · Round shaft/ Key way, center tap shaft

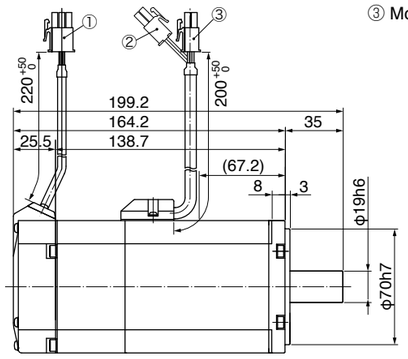

① Encoder connector
② Brake connector
③ Motor connector

* Use hexagon socket head screw for installation.

● Motor model — Mass: 3.6 kg

Power supply	Shaft	without oil seal	with oil seal
200 V	Round	MSMF092L1B2	MSMF092L1D2
	Key-way, center tap	MSMF092L1T2	MSMF092L1V2

● Dimensions are subject to change without notice. Contact us or a dealer for the latest information.

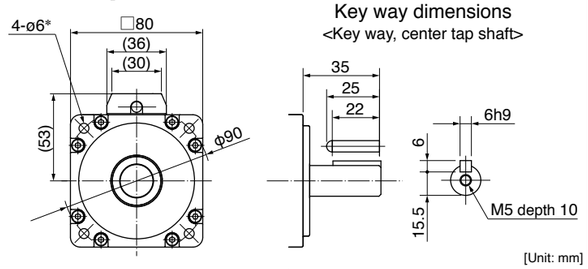

Key way dimensions
<Key way, center tap shaft>

[Unit: mm]

Connector type (IP67) · without brake · without/with oil seal · Round shaft/ Key way, center tap shaft

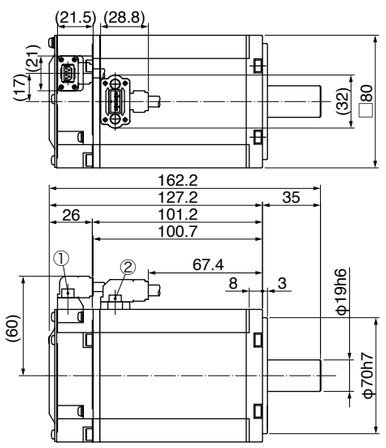

① Encoder connector
② Motor connector

* Use hexagon socket head screw for installation.

● Motor model — Mass: 2.8 kg

Power supply	Shaft	without oil seal	with oil seal
200 V	Round	MSMF092L1A1	MSMF092L1C1
	Key-way, center tap	MSMF092L1S1	MSMF092L1U1

● Dimensions are subject to change without notice. Contact us or a dealer for the latest information.

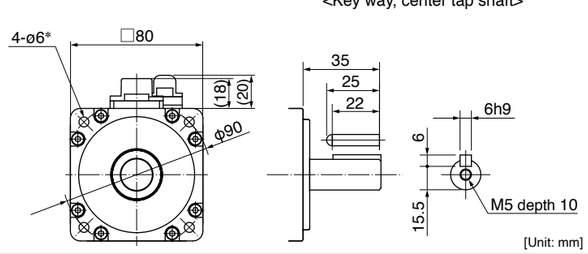

Key way dimensions
<Key way, center tap shaft>

[Unit: mm]

Connector type (IP67) · with brake · without/with oil seal · Round shaft/ Key way, center tap shaft

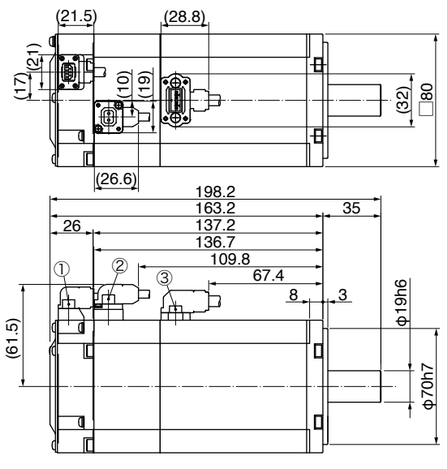

① Encoder connector
② Brake connector
③ Motor connector

* Use hexagon socket head screw for installation.

● Motor model — Mass: 3.6 kg

Power supply	Shaft	without oil seal	with oil seal
200 V	Round	MSMF092L1B1	MSMF092L1D1
	Key-way, center tap	MSMF092L1T1	MSMF092L1V1

● Dimensions are subject to change without notice. Contact us or a dealer for the latest information.

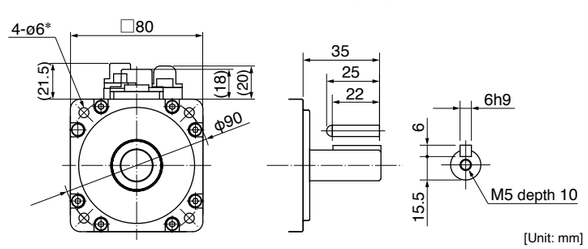

Key way dimensions
<Key way, center tap shaft>

[Unit: mm]

* For motors specifications, refer to P.72.

MSMF 1.0 kW

Large size connector (JL10) type ・ without brake ・ with oil seal/ with protective lip ・ Key way shaft/ Round shaft

① Encoder connector (Large size JL10)
② Motor connector

Mass: 3.6 kg

● Motor model

Power supply	Shaft	with oil seal	with protective lip
200 V	Round	MSMF102L1C6	MSMF102L1C8
	Key-way	MSMF102L1G6	MSMF102L1G8

● Dimensions are subject to change without notice. Contact us or a dealer for the latest information.

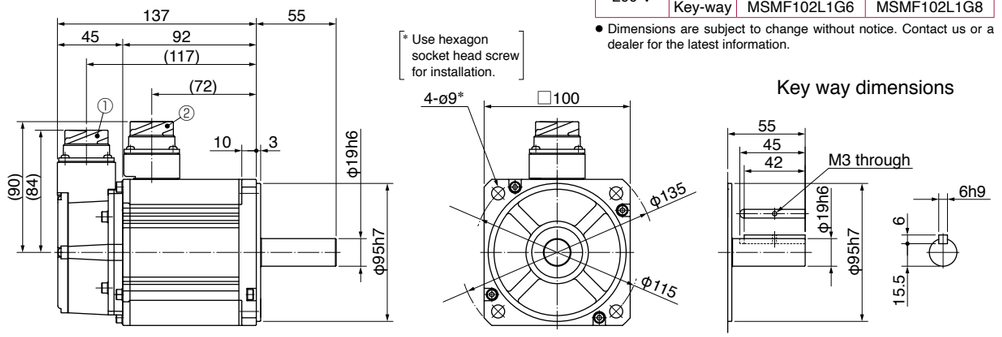

[Unit: mm]

Large size connector (JL10) type ・ with brake ・ with oil seal/ with protective lip ・ Key way shaft/ Round shaft

① Encoder connector (Large size JL10)
② Motor/Brake connector

Mass: 4.7 kg

● Motor model

Power supply	Shaft	with oil seal	with protective lip
200 V	Round	MSMF102L1D6	MSMF102L1D8
	Key-way	MSMF102L1H6	MSMF102L1H8

● Dimensions are subject to change without notice. Contact us or a dealer for the latest information.

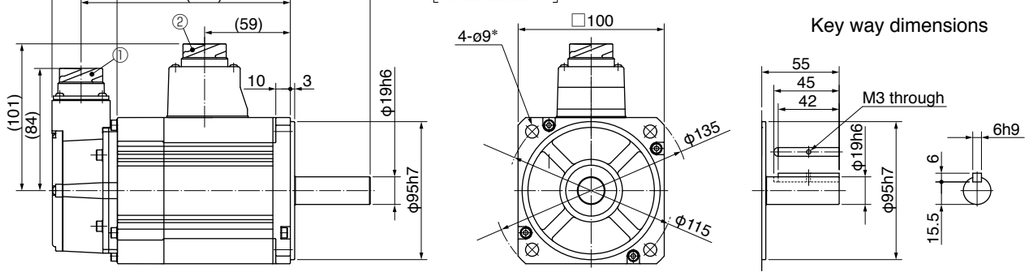

[Unit: mm]

Small size connector (JN2) type ・ without brake ・ with oil seal/ with protective lip ・ Key way shaft/ Round shaft

① Encoder connector (Small size JN2)
② Motor connector

Mass: 3.6 kg

● Motor model

Power supply	Shaft	with oil seal	with protective lip
200 V	Round	MSMF102L1C5	MSMF102L1C7
	Key-way	MSMF102L1G5	MSMF102L1G7

● Dimensions are subject to change without notice. Contact us or a dealer for the latest information.

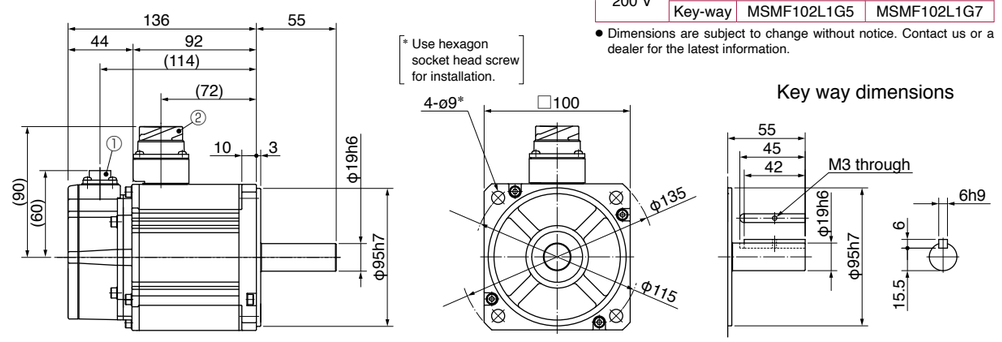

[Unit: mm]

* For motors specifications, refer to P.73.

MSMF 1.0 kW

Small size connector (JN2) type ・ with brake ・ with oil seal/ with protective lip ・ Key way shaft/ Round shaft

① Encoder connector (Small size JN2)
② Motor/Brake connector

Mass: 4.7 kg

● Motor model

Power supply	Shaft	with oil seal	with protective lip
200 V	Round	MSMF102L1D5	MSMF102L1D7
	Key-way	MSMF102L1H5	MSMF102L1H7

● Dimensions are subject to change without notice. Contact us or a dealer for the latest information.

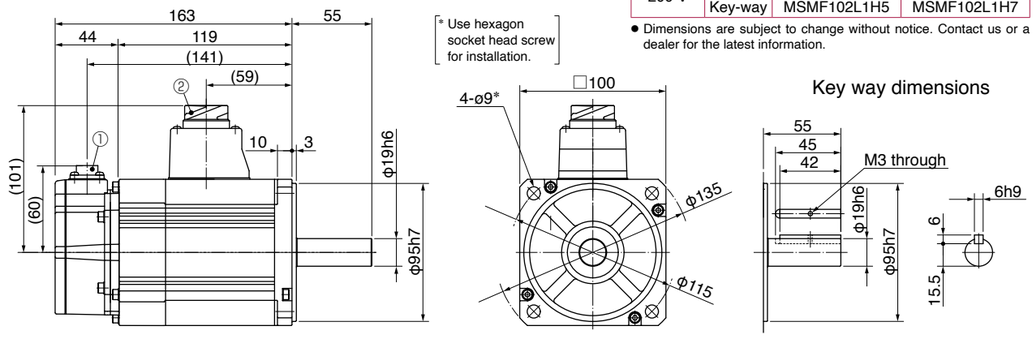

[Unit: mm]

MSMF 1.5 kW

Large size connector (JL10) type ・ without brake ・ with oil seal/ with protective lip ・ Key way shaft/ Round shaft

① Encoder connector (Large size JL10)
② Motor connector

Mass: 4.6 kg

● Motor model

Power supply	Shaft	with oil seal	with protective lip
200 V	Round	MSMF152L1C6	MSMF152L1C8
	Key-way	MSMF152L1G6	MSMF152L1G8

● Dimensions are subject to change without notice. Contact us or a dealer for the latest information.

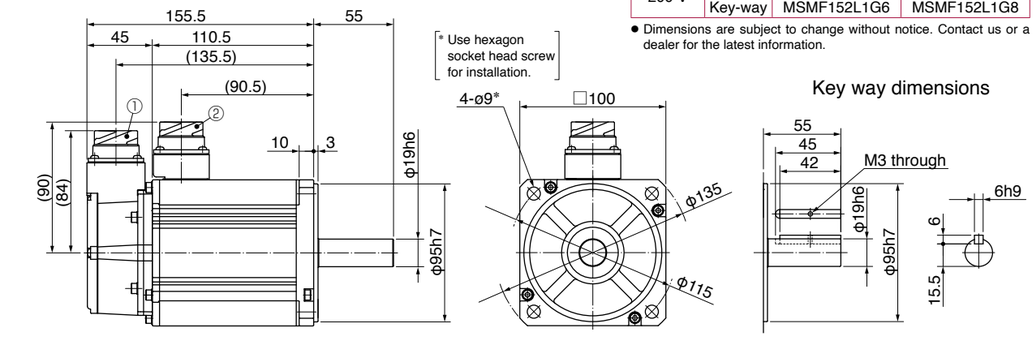

[Unit: mm]

Large size connector (JL10) type ・ with brake ・ with oil seal/ with protective lip ・ Key way shaft/ Round shaft

① Encoder connector (Large size JL10)
② Motor/Brake connector

Mass: 5.6 kg

● Motor model

Power supply	Shaft	with oil seal	with protective lip
200 V	Round	MSMF152L1D6	MSMF152L1D8
	Key-way	MSMF152L1H6	MSMF152L1H8

● Dimensions are subject to change without notice. Contact us or a dealer for the latest information.

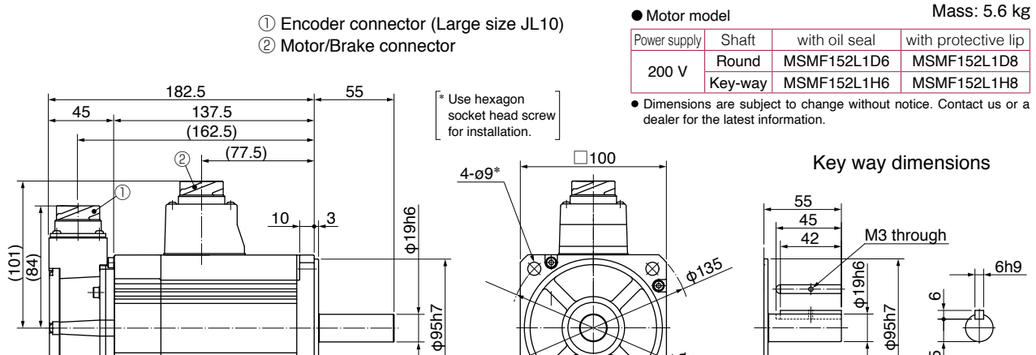

[Unit: mm]

* For motors specifications, refer to P.73, P.74.

MSMF 1.5 kW

Small size connector (JN2) type ・ without brake ・ with oil seal/ with protective lip ・ Key way shaft/ Round shaft

① Encoder connector (Small size JN2)
② Motor connector

Mass: 4.6 kg

● Motor model

Power supply	Shaft	with oil seal	with protective lip
200 V	Round	MSMF152L1C5	MSMF152L1C7
	Key-way	MSMF152L1G5	MSMF152L1G7

● Dimensions are subject to change without notice. Contact us or a dealer for the latest information.

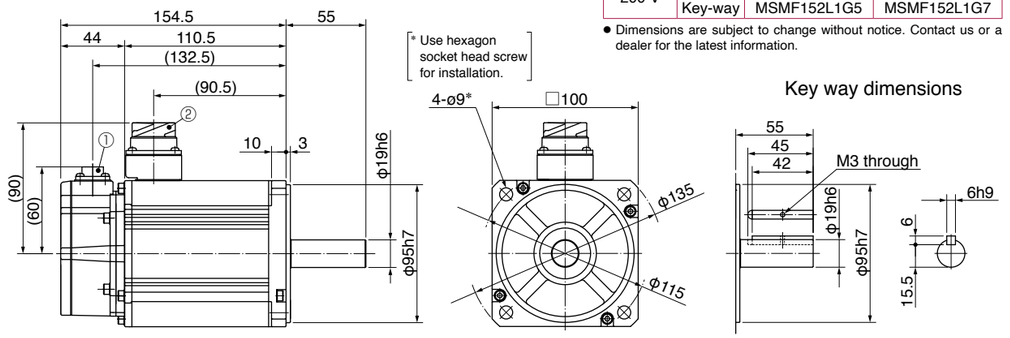

[Unit: mm]

Small size connector (JN2) type ・ with brake ・ with oil seal/ with protective lip ・ Key way shaft/ Round shaft

① Encoder connector (Small size JN2)
② Motor/Brake connector

Mass: 5.6 kg

● Motor model

Power supply	Shaft	with oil seal	with protective lip
200 V	Round	MSMF152L1D5	MSMF152L1D7
	Key-way	MSMF152L1H5	MSMF152L1H7

● Dimensions are subject to change without notice. Contact us or a dealer for the latest information.

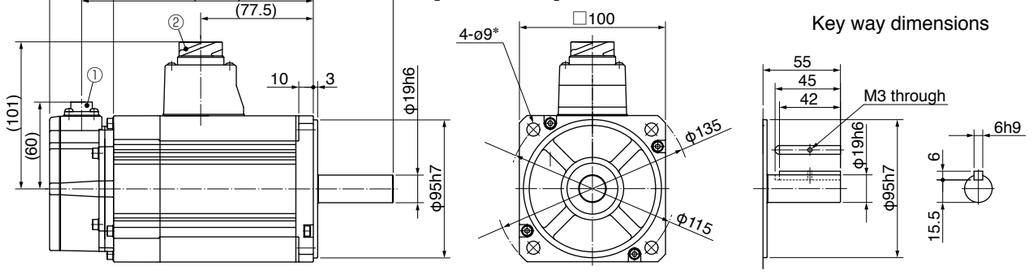

[Unit: mm]

MSMF 2.0 kW

Large size connector (JL10) type ・ without brake ・ with oil seal/ with protective lip ・ Key way shaft/ Round shaft

① Encoder connector (Large size JL10)
② Motor connector

Mass: 5.6 kg

● Motor model

Power supply	Shaft	with oil seal	with protective lip
200 V	Round	MSMF202L1C6	MSMF202L1C8
	Key-way	MSMF202L1G6	MSMF202L1G8

● Dimensions are subject to change without notice. Contact us or a dealer for the latest information.

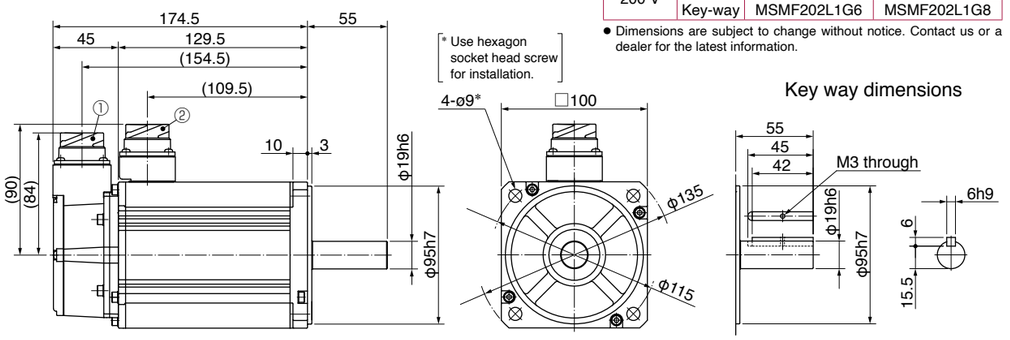

[Unit: mm]

* For motors specifications, refer to P.74, P.75.

MSMF 2.0 kW

Large size connector (JL10) type ・ with brake ・ with oil seal/ with protective lip ・ Key way shaft/ Round shaft

① Encoder connector (Large size JL10)
② Motor/Brake connector

Mass: 6.6 kg

● Motor model

Power supply	Shaft	with oil seal	with protective lip
200 V	Round	MSMF202L1D6	MSMF202L1D8
	Key-way	MSMF202L1H6	MSMF202L1H8

● Dimensions are subject to change without notice. Contact us or a dealer for the latest information.

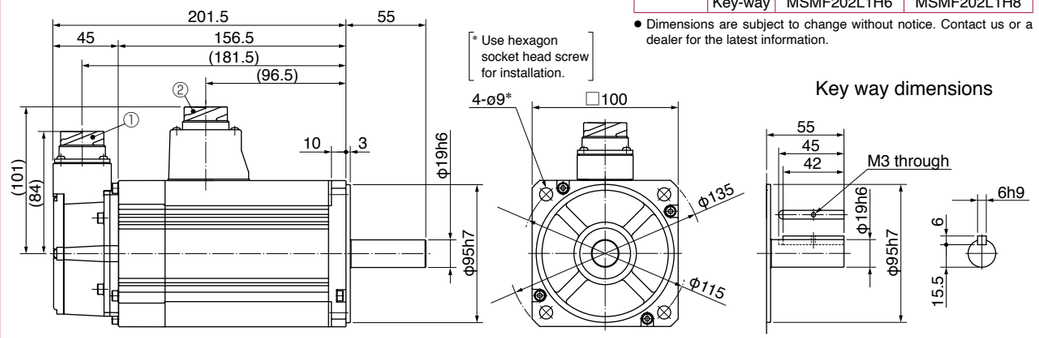

[Unit: mm]

Small size connector (JN2) type ・ without brake ・ with oil seal/ with protective lip ・ Key way shaft/ Round shaft

① Encoder connector (Small size JN2)
② Motor connector

Mass: 5.6 kg

● Motor model

Power supply	Shaft	with oil seal	with protective lip
200 V	Round	MSMF202L1C5	MSMF202L1C7
	Key-way	MSMF202L1G5	MSMF202L1G7

● Dimensions are subject to change without notice. Contact us or a dealer for the latest information.

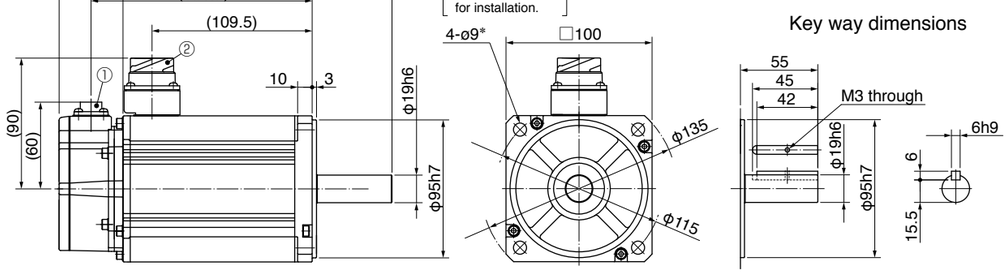

[Unit: mm]

Small size connector (JN2) type ・ with brake ・ with oil seal/ with protective lip ・ Key way shaft/ Round shaft

① Encoder connector (Small size JN2)
② Motor/Brake connector

Mass: 6.6 kg

● Motor model

Power supply	Shaft	with oil seal	with protective lip
200 V	Round	MSMF202L1D5	MSMF202L1D7
	Key-way	MSMF202L1H5	MSMF202L1H7

● Dimensions are subject to change without notice. Contact us or a dealer for the latest information.

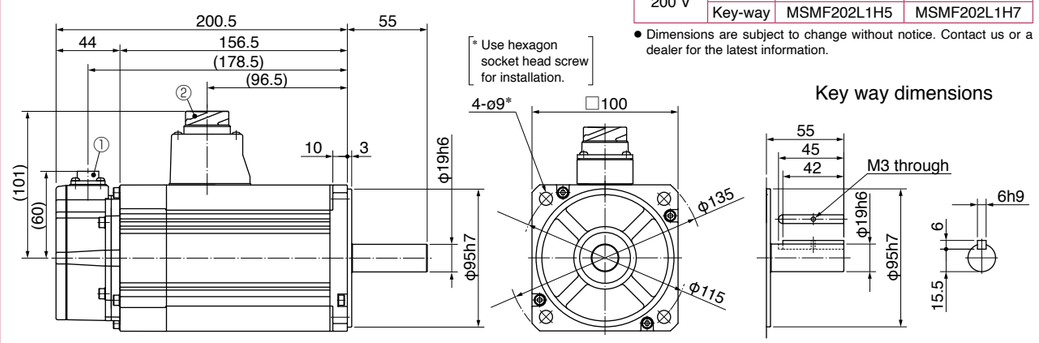

[Unit: mm]

* For motors specifications, refer to P.75.

MSMF 3.0 kW

Large size connector (JL10) type ・ without brake ・ with oil seal/ with protective lip ・ Key way shaft/ Round shaft

① Encoder connector (Large size JL10)
② Motor connector

Mass: 8.7 kg

● Motor model

Power supply	Shaft	with oil seal	with protective lip
200 V	Round	MSMF302L1C6	MSMF302L1C8
	Key-way	MSMF302L1G6	MSMF302L1G8

● Dimensions are subject to change without notice. Contact us or a dealer for the latest information.

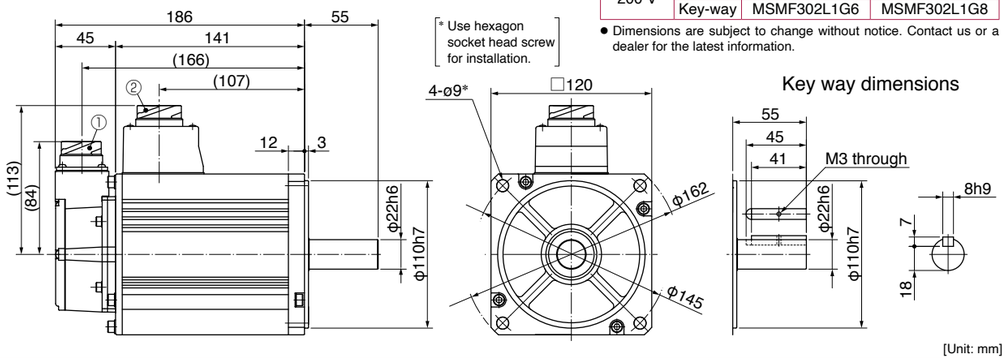

[Unit: mm]

Large size connector (JL10) type ・ with brake ・ with oil seal/ with protective lip ・ Key way shaft/ Round shaft

① Encoder connector (Large size JL10)
② Motor/Brake connector

Mass: 9.9 kg

● Motor model

Power supply	Shaft	with oil seal	with protective lip
200 V	Round	MSMF302L1D6	MSMF302L1D8
	Key-way	MSMF302L1H6	MSMF302L1H8

● Dimensions are subject to change without notice. Contact us or a dealer for the latest information.

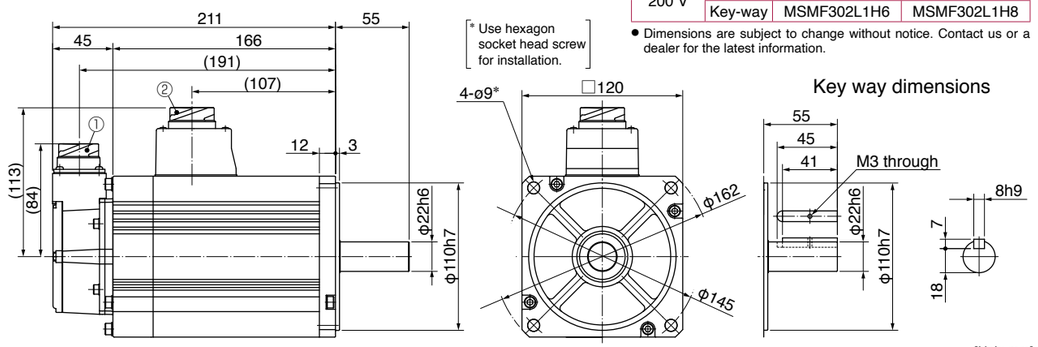

[Unit: mm]

Small size connector (JN2) type ・ without brake ・ with oil seal/ with protective lip ・ Key way shaft/ Round shaft

① Encoder connector (Small size JN2)
② Motor connector

Mass: 8.7 kg

● Motor model

Power supply	Shaft	with oil seal	with protective lip
200 V	Round	MSMF302L1C5	MSMF302L1C7
	Key-way	MSMF302L1G5	MSMF302L1G7

● Dimensions are subject to change without notice. Contact us or a dealer for the latest information.

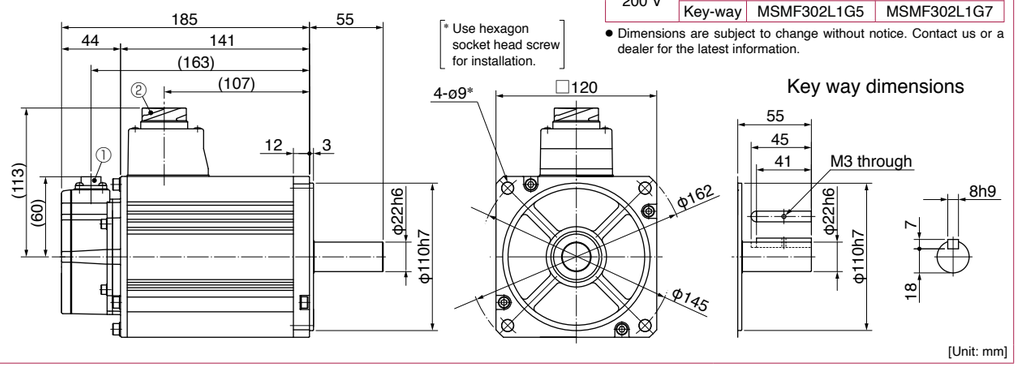

[Unit: mm]

* For motors specifications, refer to P.76.

MSMF 3.0 kW

Small size connector (JN2) type ・ with brake ・ with oil seal/ with protective lip ・ Key way shaft/ Round shaft

① Encoder connector (Small size JN2)
② Motor/Brake connector

Mass: 9.9 kg

● Motor model

Power supply	Shaft	with oil seal	with protective lip
200 V	Round	MSMF302L1D5	MSMF302L1D7
	Key-way	MSMF302L1H5	MSMF302L1H7

● Dimensions are subject to change without notice. Contact us or a dealer for the latest information.

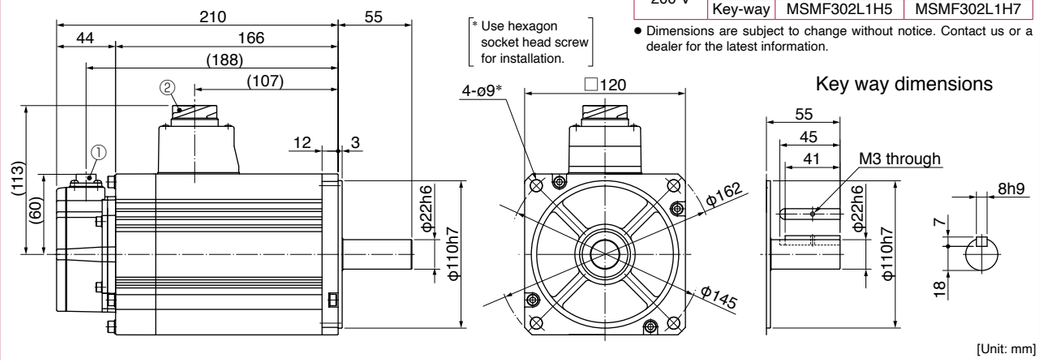

[Unit: mm]

MSMF 4.0 kW

Large size connector (JL10) type ・ without brake ・ with oil seal/ with protective lip ・ Key way shaft/ Round shaft

① Encoder connector (Large size JL10)
② Motor connector

Mass: 11.5 kg

● Motor model

Power supply	Shaft	with oil seal	with protective lip
200 V	Round	MSMF402L1C6	MSMF402L1C8
	Key-way	MSMF402L1G6	MSMF402L1G8

● Dimensions are subject to change without notice. Contact us or a dealer for the latest information.

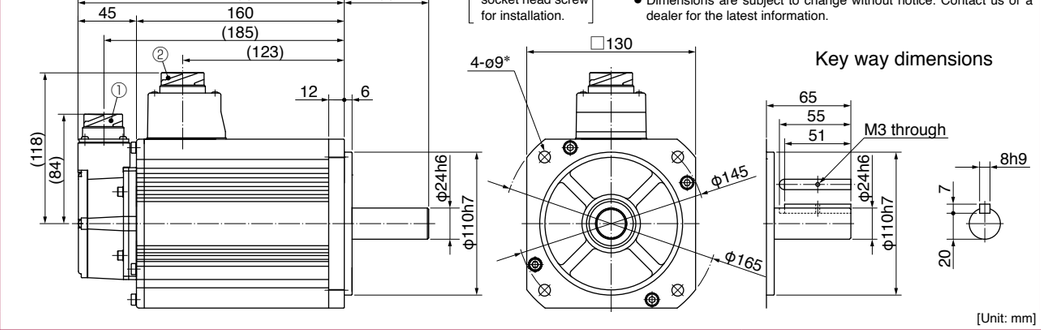

[Unit: mm]

Large size connector (JL10) type ・ with brake ・ with oil seal/ with protective lip ・ Key way shaft/ Round shaft

① Encoder connector (Large size JL10)
② Motor/Brake connector

Mass: 13.2 kg

● Motor model

Power supply	Shaft	with oil seal	with protective lip
200 V	Round	MSMF402L1D6	MSMF402L1D8
	Key-way	MSMF402L1H6	MSMF402L1H8

● Dimensions are subject to change without notice. Contact us or a dealer for the latest information.

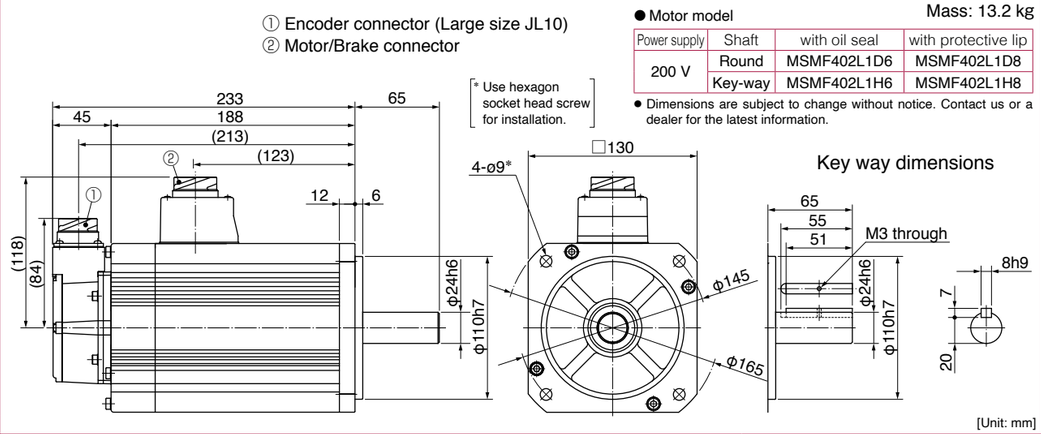

[Unit: mm]

* For motors specifications, refer to P.76, P.77.

MSMF 4.0 kW

Small size connector (JN2) type · without brake · with oil seal/ with protective lip · Key way shaft/ Round shaft

① Encoder connector (Small size JN2)
② Motor connector

Mass: 11.5 kg

● Motor model

Power supply	Shaft	with oil seal	with protective lip
200 V	Round	MSMF402L1C5	MSMF402L1C7
	Key-way	MSMF402L1G5	MSMF402L1G7

● Dimensions are subject to change without notice. Contact us or a dealer for the latest information.

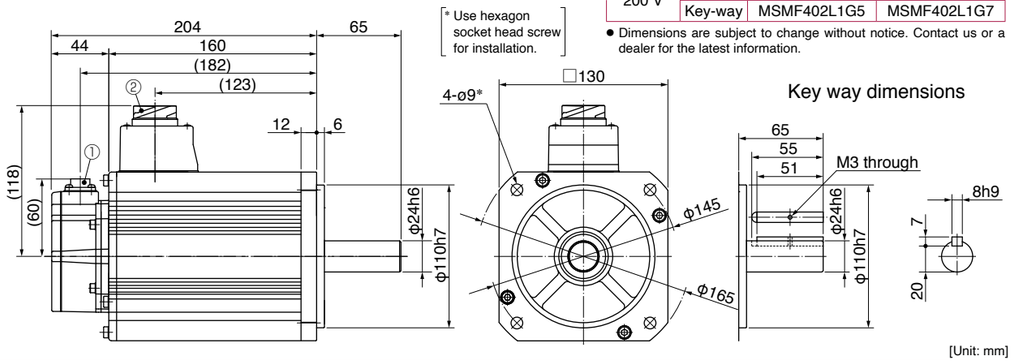

[Unit: mm]

Small size connector (JN2) type · with brake · with oil seal/ with protective lip · Key way shaft/ Round shaft

① Encoder connector (Small size JN2)
② Motor/Brake connector

Mass: 13.2 kg

● Motor model

Power supply	Shaft	with oil seal	with protective lip
200 V	Round	MSMF402L1D5	MSMF402L1D7
	Key-way	MSMF402L1H5	MSMF402L1H7

● Dimensions are subject to change without notice. Contact us or a dealer for the latest information.

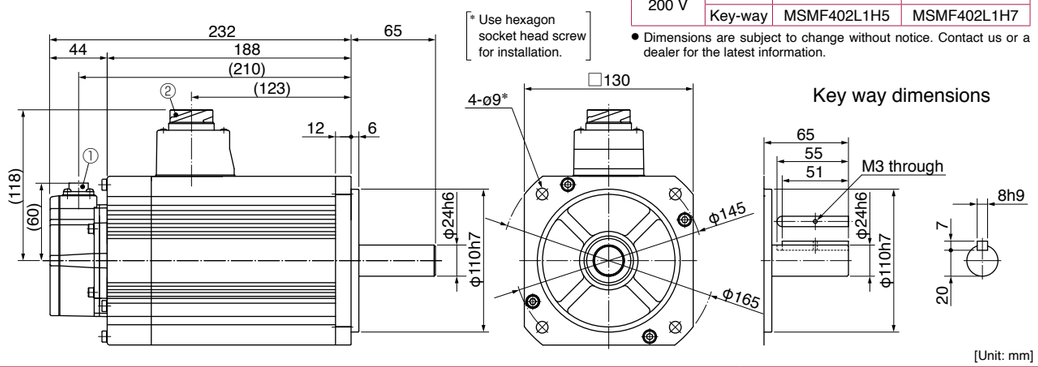

[Unit: mm]

MSMF 5.0 kW

Large size connector (JL10) type · without brake · with oil seal/ with protective lip · Key way shaft/ Round shaft

① Encoder connector (Large size JL10)
② Motor connector

Mass: 14.5 kg

● Motor model

Power supply	Shaft	with oil seal	with protective lip
200 V	Round	MSMF502L1C6	MSMF502L1C8
	Key-way	MSMF502L1G6	MSMF502L1G8

● Dimensions are subject to change without notice. Contact us or a dealer for the latest information.

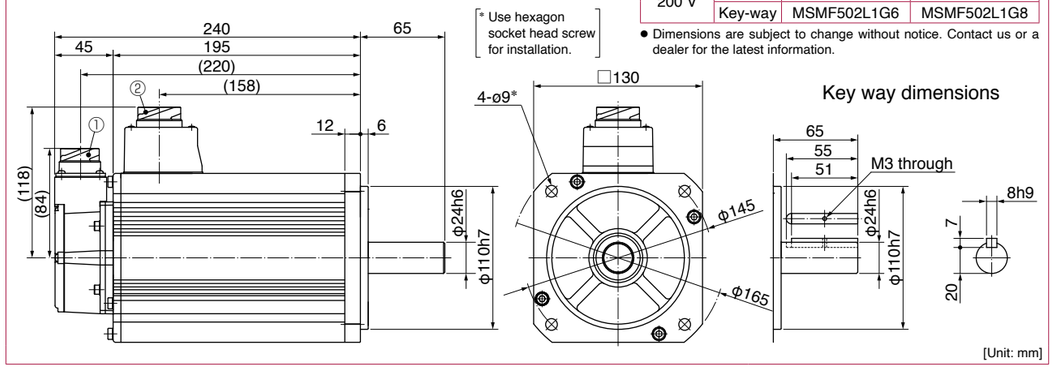

[Unit: mm]

* For motors specifications, refer to P.77, P.78.

MSMF 5.0 kW

Large size connector (JL10) type · with brake · with oil seal/ with protective lip · Key way shaft/ Round shaft

① Encoder connector (Large size JL10)
② Motor/Brake connector

Mass: 16.1 kg

● Motor model

Power supply	Shaft	with oil seal	with protective lip
200 V	Round	MSMF502L1D6	MSMF502L1D8
	Key-way	MSMF502L1H6	MSMF502L1H8

● Dimensions are subject to change without notice. Contact us or a dealer for the latest information.

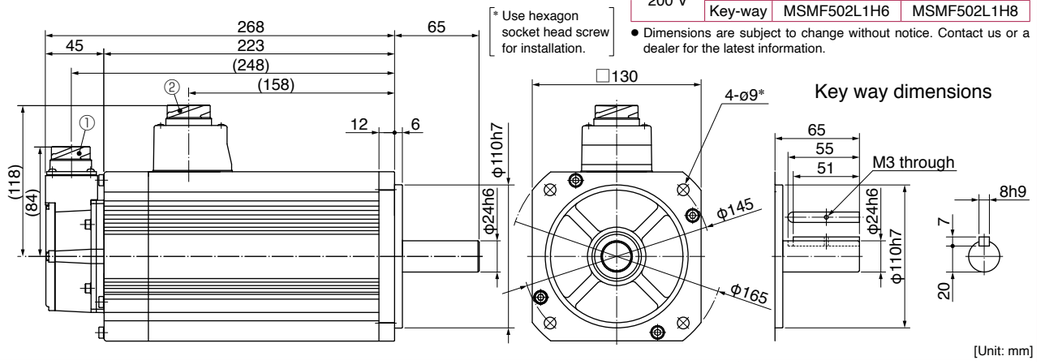

[Unit: mm]

Small size connector (JN2) type · without brake · with oil seal/ with protective lip · Key way shaft/ Round shaft

① Encoder connector (Small size JN2)
② Motor connector

Mass: 14.5 kg

● Motor model

Power supply	Shaft	with oil seal	with protective lip
200 V	Round	MSMF502L1C5	MSMF502L1C7
	Key-way	MSMF502L1G5	MSMF502L1G7

● Dimensions are subject to change without notice. Contact us or a dealer for the latest information.

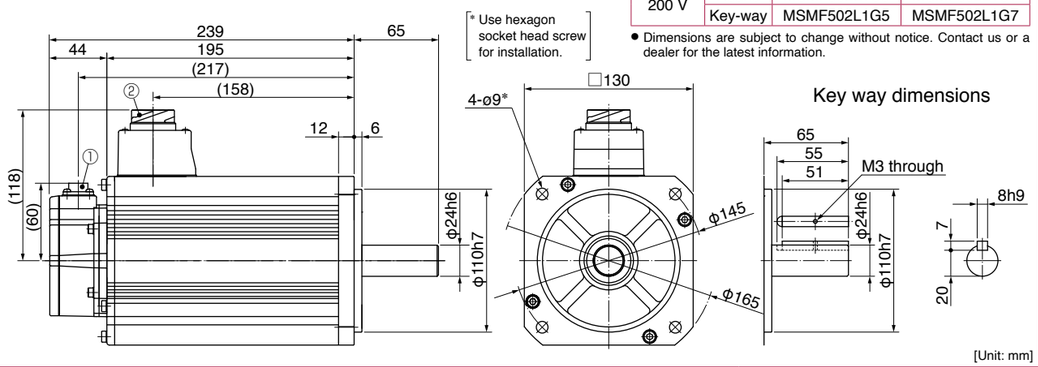

[Unit: mm]

Small size connector (JN2) type · with brake · with oil seal/ with protective lip · Key way shaft/ Round shaft

① Encoder connector (Small size JN2)
② Motor/Brake connector

Mass: 16.1 kg

● Motor model

Power supply	Shaft	with oil seal	with protective lip
200 V	Round	MSMF502L1D5	MSMF502L1D7
	Key-way	MSMF502L1H5	MSMF502L1H7

● Dimensions are subject to change without notice. Contact us or a dealer for the latest information.

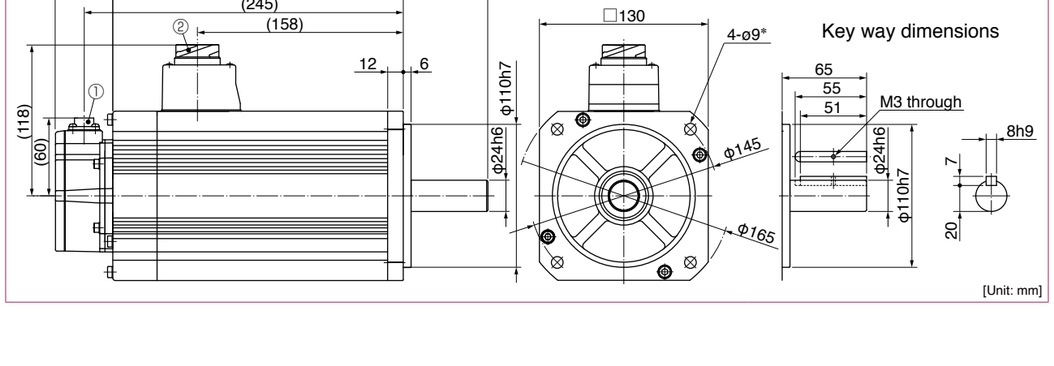

[Unit: mm]

* For motors specifications, refer to P.78.

MQMF 100 W

Leadwire type (IP65) · without brake · without oil seal · Round shaft/ Key way, center tap shaft

Mass: 0.54 kg

① Encoder connector
② Motor connector

● Motor model

Power supply	Shaft	Motor model No.
100 V	Round	MQMF011L1A2
	Key-way, center tap	MQMF011L1S2
200 V	Round	MQMF012L1A2
	Key-way, center tap	MQMF012L1S2

● Dimensions are subject to change without notice. Contact us or a dealer for the latest information.

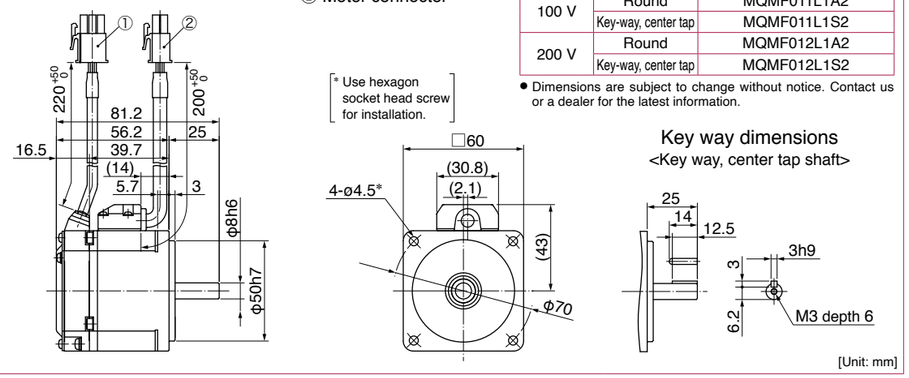

[Unit: mm]

Leadwire type (IP65) · without brake · with oil seal · Round shaft/ Key way, center tap shaft

Mass: 0.57 kg

① Encoder connector
② Motor connector

● Motor model

Power supply	Shaft	Motor model No.
100 V	Round	MQMF011L1C2
	Key-way, center tap	MQMF011L1U2
200 V	Round	MQMF012L1C2
	Key-way, center tap	MQMF012L1U2

● Dimensions are subject to change without notice. Contact us or a dealer for the latest information.

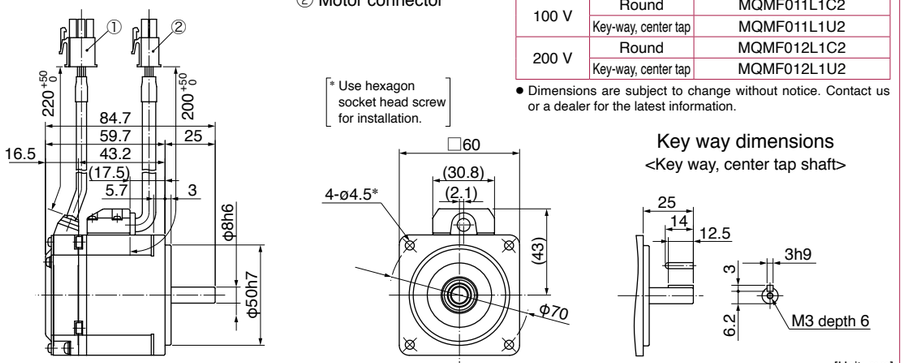

[Unit: mm]

Leadwire type (IP65) · without brake · with protective lip/ with oil seal · Round shaft/ Key way, center tap shaft

Mass: 0.61 kg

① Encoder connector
② Motor connector

● Motor model

Power supply	Shaft	Motor model No.
100 V	Round	MQMF011L1C4
	Key-way, center tap	MQMF011L1U4
200 V	Round	MQMF012L1C4
	Key-way, center tap	MQMF012L1U4

● Dimensions are subject to change without notice. Contact us or a dealer for the latest information.

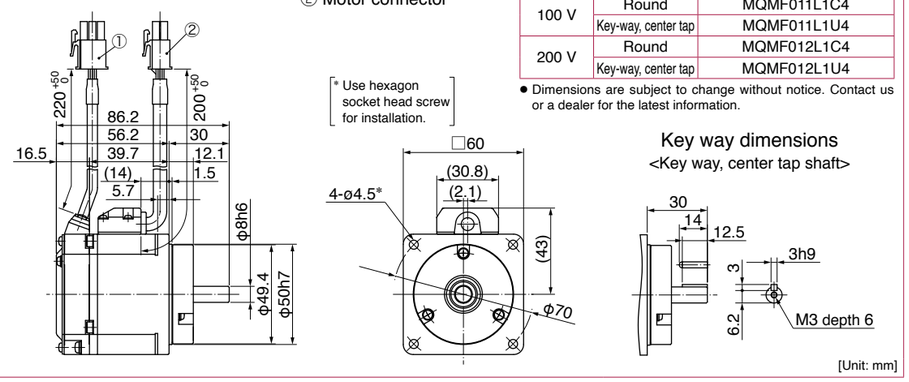

[Unit: mm]

* For motors specifications, refer to P.79, P.80.

MQMF 100 W

Leadwire type (IP65) · with brake · without oil seal · Round shaft/ Key way, center tap shaft

Mass: 0.79 kg

① Encoder connector
② Brake connector
③ Motor connector

● Motor model

Power supply	Shaft	Motor model No.
100 V	Round	MQMF011L1B2
	Key-way, center tap	MQMF011L1T2
200 V	Round	MQMF012L1B2
	Key-way, center tap	MQMF012L1T2

● Dimensions are subject to change without notice. Contact us or a dealer for the latest information.

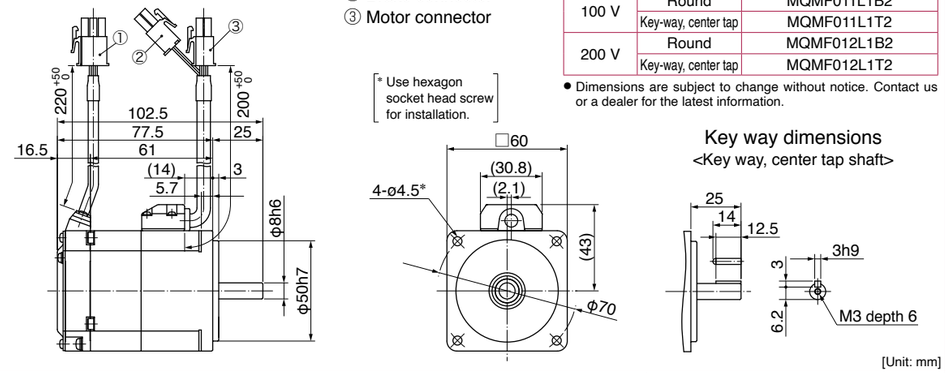

[Unit: mm]

Leadwire type (IP65) · with brake · with oil seal · Round shaft/ Key way, center tap shaft

Mass: 0.82 kg

① Encoder connector
② Brake connector
③ Motor connector

● Motor model

Power supply	Shaft	Motor model No.
100 V	Round	MQMF011L1D2
	Key-way, center tap	MQMF011L1V2
200 V	Round	MQMF012L1D2
	Key-way, center tap	MQMF012L1V2

● Dimensions are subject to change without notice. Contact us or a dealer for the latest information.

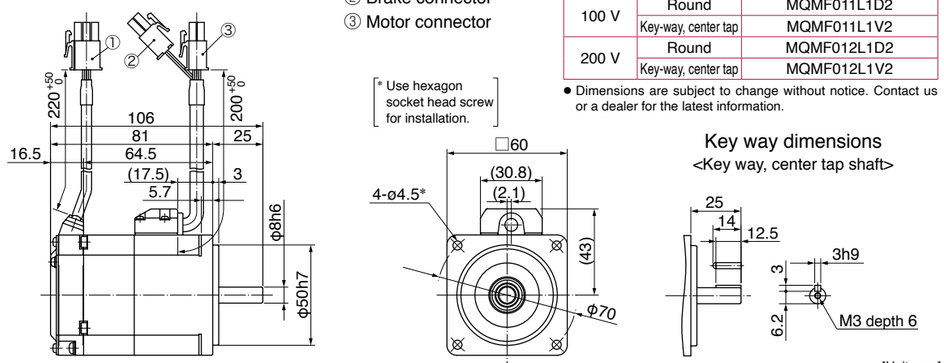

[Unit: mm]

Leadwire type (IP65) · with brake · with protective lip/ with oil seal · Round shaft/ Key way, center tap shaft

Mass: 0.86 kg

① Encoder connector
② Brake connector
③ Motor connector

● Motor model

Power supply	Shaft	Motor model No.
100 V	Round	MQMF011L1D4
	Key-way, center tap	MQMF011L1V4
200 V	Round	MQMF012L1D4
	Key-way, center tap	MQMF012L1V4

● Dimensions are subject to change without notice. Contact us or a dealer for the latest information.

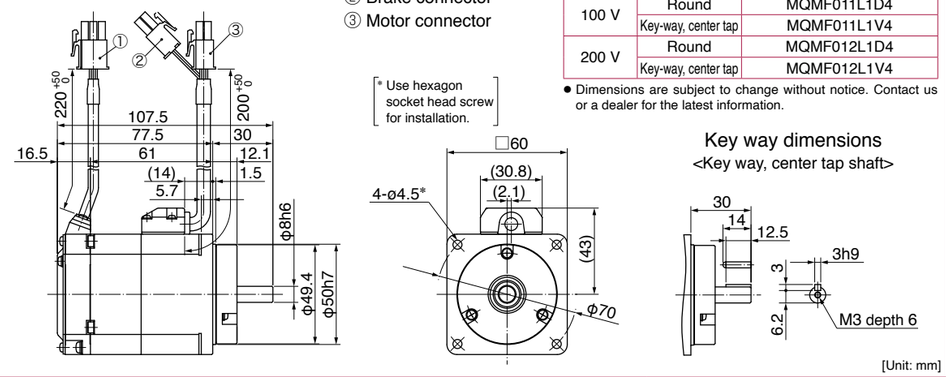

[Unit: mm]

* For motors specifications, refer to P.79, P.80.

MQMF 100 W

Connector type (IP67) · without brake · without oil seal · Round shaft/ Key way, center tap shaft

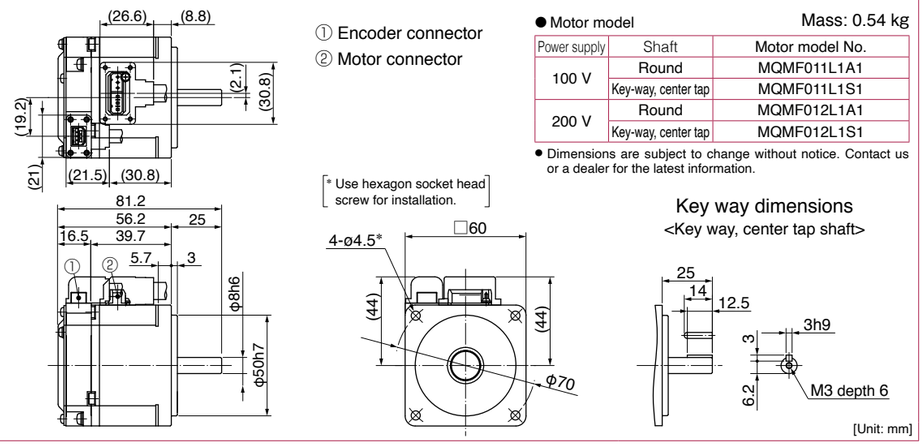

① Encoder connector
② Motor connector

[* Use hexagon socket head screw for installation.]

● Motor model — Mass: 0.54 kg

Power supply	Shaft	Motor model No.
100 V	Round	MQMF011L1A1
	Key-way, center tap	MQMF011L1S1
200 V	Round	MQMF012L1A1
	Key-way, center tap	MQMF012L1S1

● Dimensions are subject to change without notice. Contact us or a dealer for the latest information.

Key way dimensions
<Key way, center tap shaft>

[Unit: mm]

Connector type (IP67) · without brake · with oil seal · Round shaft/ Key way, center tap shaft

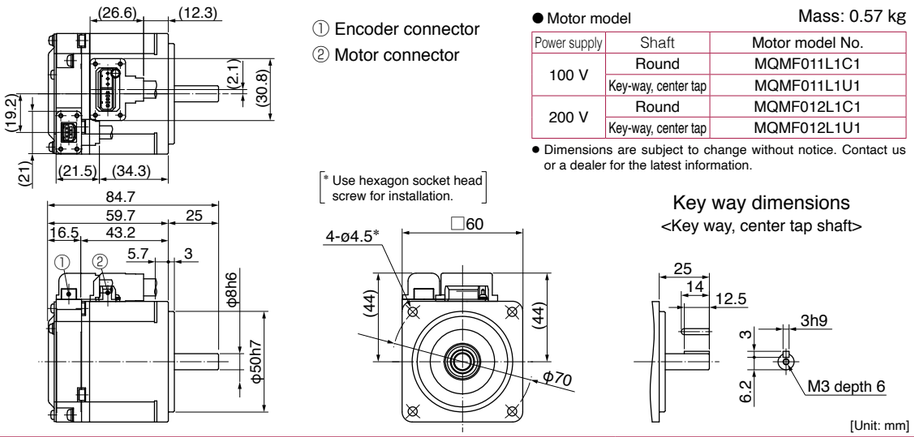

① Encoder connector
② Motor connector

[* Use hexagon socket head screw for installation.]

● Motor model — Mass: 0.57 kg

Power supply	Shaft	Motor model No.
100 V	Round	MQMF011L1C1
	Key-way, center tap	MQMF011L1U1
200 V	Round	MQMF012L1C1
	Key-way, center tap	MQMF012L1U1

● Dimensions are subject to change without notice. Contact us or a dealer for the latest information.

Key way dimensions
<Key way, center tap shaft>

[Unit: mm]

Connector type (IP67) · without brake · with protective lip/ with oil seal · Round shaft/ Key way, center tap shaft

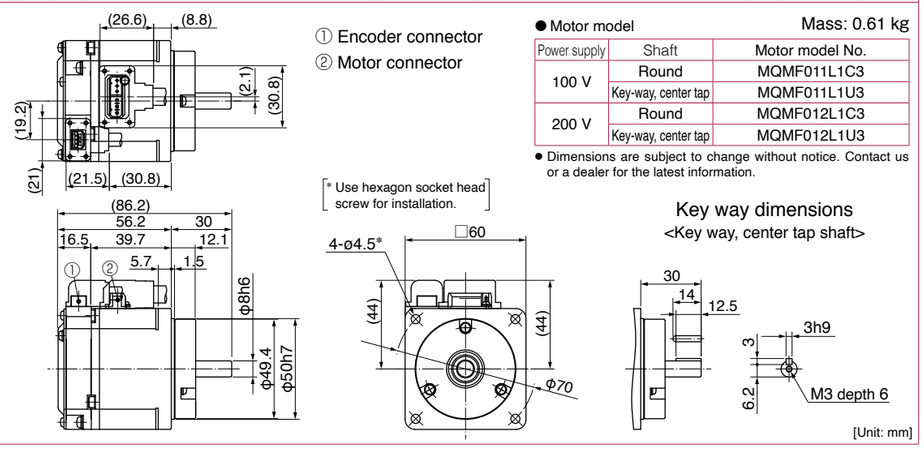

① Encoder connector
② Motor connector

[* Use hexagon socket head screw for installation.]

● Motor model — Mass: 0.61 kg

Power supply	Shaft	Motor model No.
100 V	Round	MQMF011L1C3
	Key-way, center tap	MQMF011L1U3
200 V	Round	MQMF012L1C3
	Key-way, center tap	MQMF012L1U3

● Dimensions are subject to change without notice. Contact us or a dealer for the latest information.

Key way dimensions
<Key way, center tap shaft>

[Unit: mm]

* For motors specifications, refer to P.79, P.80.

MQMF 100 W

Connector type (IP67) · with brake · without oil seal · Round shaft/ Key way, center tap shaft

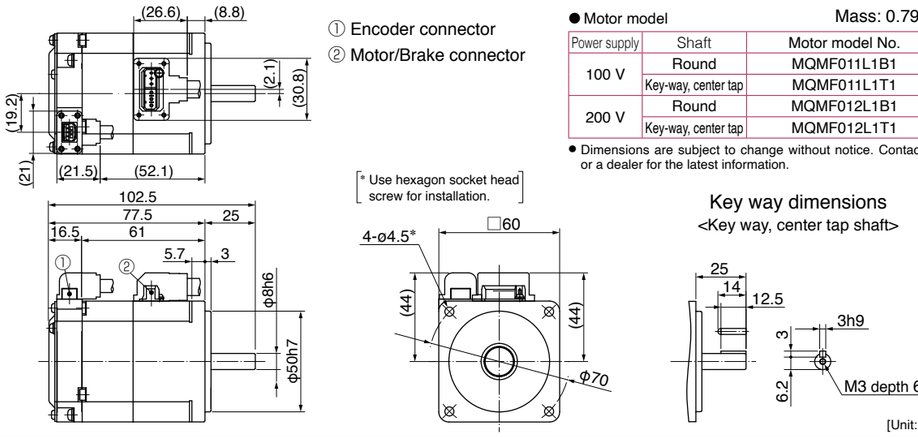

① Encoder connector
② Motor/Brake connector

[* Use hexagon socket head screw for installation.]

● Motor model — Mass: 0.79 kg

Power supply	Shaft	Motor model No.
100 V	Round	MQMF011L1B1
	Key-way, center tap	MQMF011L1T1
200 V	Round	MQMF012L1B1
	Key-way, center tap	MQMF012L1T1

● Dimensions are subject to change without notice. Contact us or a dealer for the latest information.

Key way dimensions
<Key way, center tap shaft>

[Unit: mm]

Connector type (IP67) · with brake · with oil seal · Round shaft/ Key way, center tap shaft

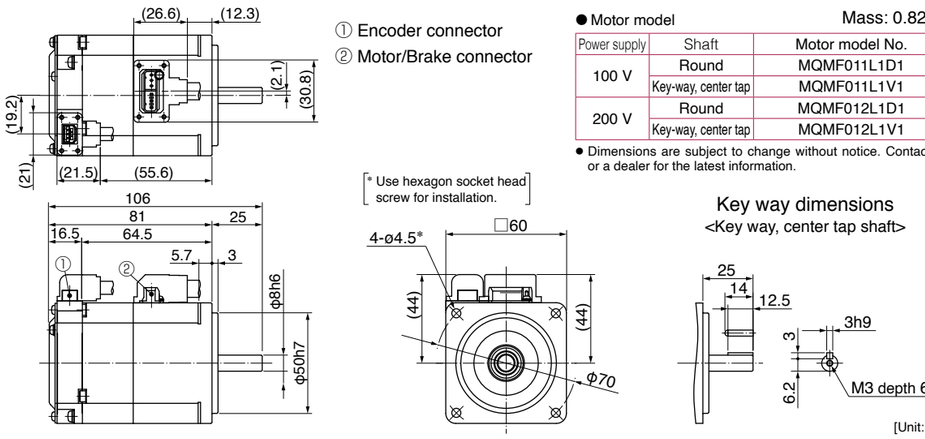

① Encoder connector
② Motor/Brake connector

[* Use hexagon socket head screw for installation.]

● Motor model — Mass: 0.82 kg

Power supply	Shaft	Motor model No.
100 V	Round	MQMF011L1D1
	Key-way, center tap	MQMF011L1V1
200 V	Round	MQMF012L1D1
	Key-way, center tap	MQMF012L1V1

● Dimensions are subject to change without notice. Contact us or a dealer for the latest information.

Key way dimensions
<Key way, center tap shaft>

[Unit: mm]

Connector type (IP67) · with brake · with protective lip/ with oil seal · Round shaft/ Key way, center tap shaft

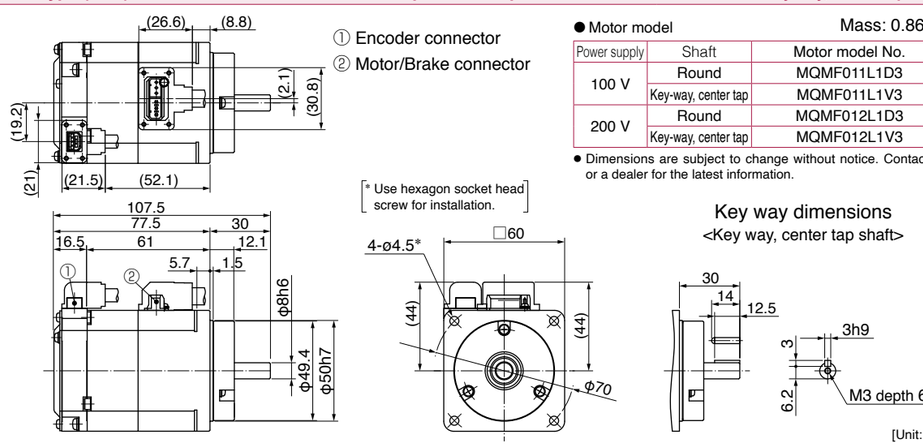

① Encoder connector
② Motor/Brake connector

[* Use hexagon socket head screw for installation.]

● Motor model — Mass: 0.86 kg

Power supply	Shaft	Motor model No.
100 V	Round	MQMF011L1D3
	Key-way, center tap	MQMF011L1V3
200 V	Round	MQMF012L1D3
	Key-way, center tap	MQMF012L1V3

● Dimensions are subject to change without notice. Contact us or a dealer for the latest information.

Key way dimensions
<Key way, center tap shaft>

[Unit: mm]

* For motors specifications, refer to P.79, P.80.

MQMF 200 W

MQMF 200 W

Leadwire type (IP65) · without brake · without oil seal · Round shaft/ Key way, center tap shaft

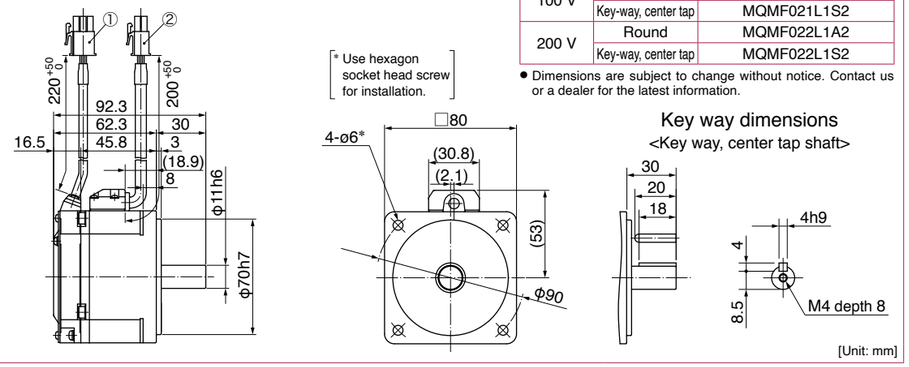

● Motor model — Mass: 1.1 kg

Power supply	Shaft	Motor model No.
100 V	Round	MQMF021L1A2
	Key-way, center tap	MQMF021L1S2
200 V	Round	MQMF022L1A2
	Key-way, center tap	MQMF022L1S2

● Dimensions are subject to change without notice. Contact us or a dealer for the latest information.

Key way dimensions
<Key way, center tap shaft>

[Unit: mm]

Leadwire type (IP65) · without brake · with oil seal · Round shaft/ Key way, center tap shaft

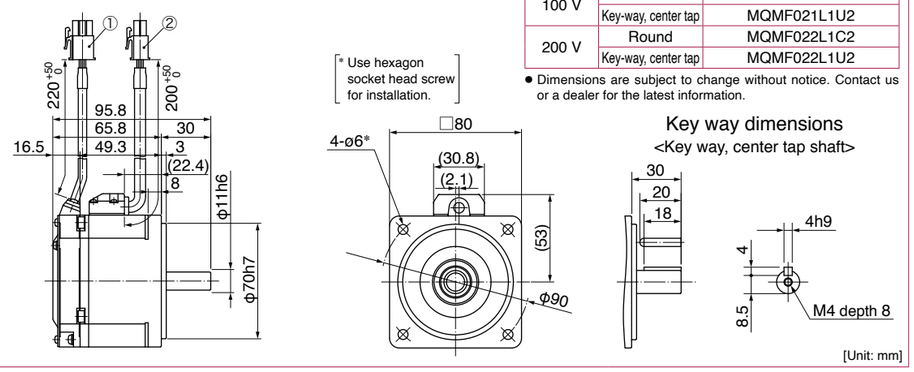

● Motor model — Mass: 1.2 kg

Power supply	Shaft	Motor model No.
100 V	Round	MQMF021L1C2
	Key-way, center tap	MQMF021L1U2
200 V	Round	MQMF022L1C2
	Key-way, center tap	MQMF022L1U2

● Dimensions are subject to change without notice. Contact us or a dealer for the latest information.

Key way dimensions
<Key way, center tap shaft>

[Unit: mm]

Leadwire type (IP65) · without brake · with protective lip/ with oil seal · Round shaft/ Key way, center tap shaft

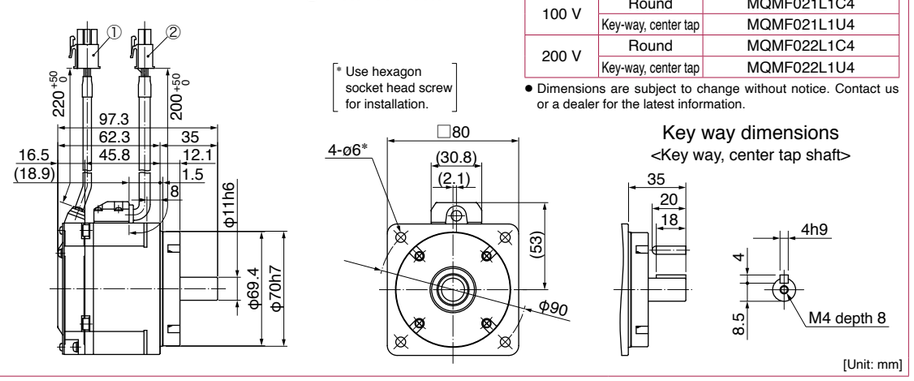

● Motor model — Mass: 1.3 kg

Power supply	Shaft	Motor model No.
100 V	Round	MQMF021L1C4
	Key-way, center tap	MQMF021L1U4
200 V	Round	MQMF022L1C4
	Key-way, center tap	MQMF022L1U4

● Dimensions are subject to change without notice. Contact us or a dealer for the latest information.

Key way dimensions
<Key way, center tap shaft>

[Unit: mm]

* For motors specifications, refer to P.81, P.82.

MQMF 200 W

Leadwire type (IP65) · with brake · without oil seal · Round shaft/ Key way, center tap shaft

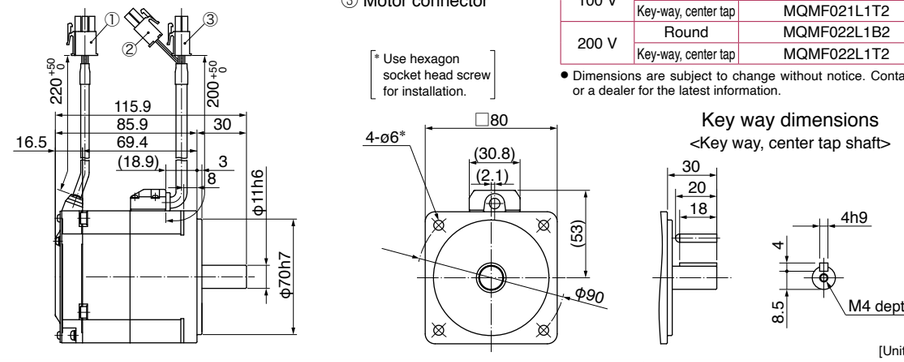

● Motor model — Mass: 1.5 kg

Power supply	Shaft	Motor model No.
100 V	Round	MQMF021L1B2
	Key-way, center tap	MQMF021L1T2
200 V	Round	MQMF022L1B2
	Key-way, center tap	MQMF022L1T2

● Dimensions are subject to change without notice. Contact us or a dealer for the latest information.

Key way dimensions
<Key way, center tap shaft>

[Unit: mm]

Leadwire type (IP65) · with brake · with oil seal · Round shaft/ Key way, center tap shaft

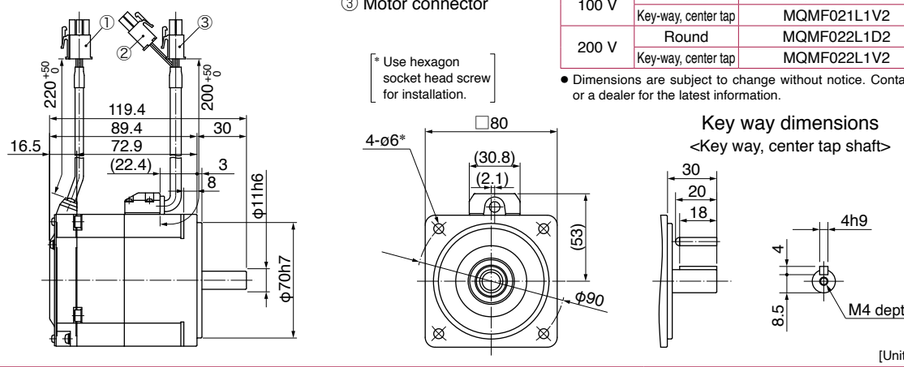

● Motor model — Mass: 1.6 kg

Power supply	Shaft	Motor model No.
100 V	Round	MQMF021L1D2
	Key-way, center tap	MQMF021L1V2
200 V	Round	MQMF022L1D2
	Key-way, center tap	MQMF022L1V2

● Dimensions are subject to change without notice. Contact us or a dealer for the latest information.

Key way dimensions
<Key way, center tap shaft>

[Unit: mm]

Leadwire type (IP65) · with brake · with protective lip/ with oil seal · Round shaft/ Key way, center tap shaft

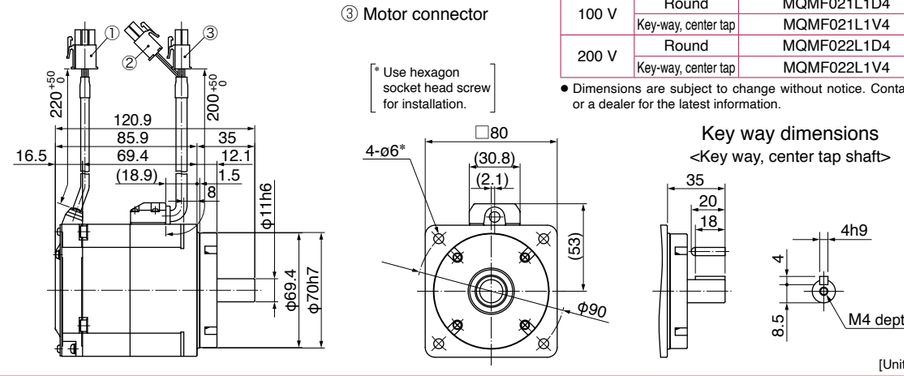

● Motor model — Mass: 1.7 kg

Power supply	Shaft	Motor model No.
100 V	Round	MQMF021L1D4
	Key-way, center tap	MQMF021L1V4
200 V	Round	MQMF022L1D4
	Key-way, center tap	MQMF022L1V4

● Dimensions are subject to change without notice. Contact us or a dealer for the latest information.

Key way dimensions
<Key way, center tap shaft>

[Unit: mm]

* For motors specifications, refer to P.81, P.82.

MQMF 200 W

Connector type (IP67) · without brake · without oil seal · Round shaft/ Key way, center tap shaft

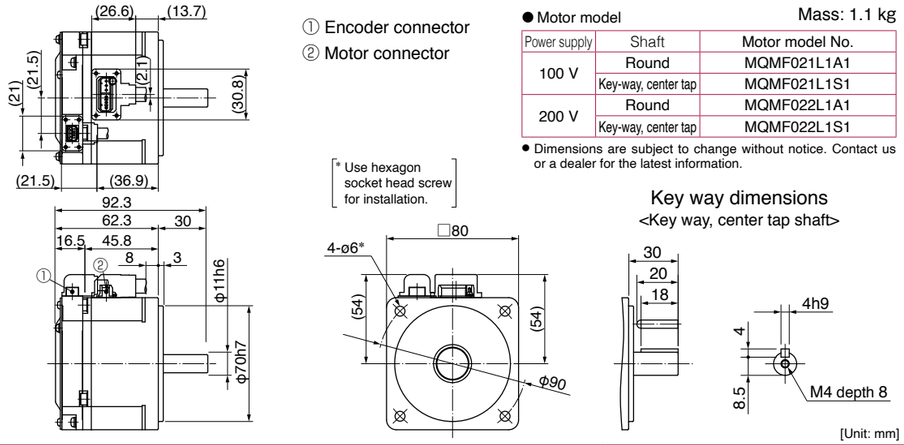

① Encoder connector
② Motor connector

● Motor model — Mass: 1.1 kg

Power supply	Shaft	Motor model No.
100 V	Round	MQMF021L1A1
	Key-way, center tap	MQMF021L1S1
200 V	Round	MQMF022L1A1
	Key-way, center tap	MQMF022L1S1

● Dimensions are subject to change without notice. Contact us or a dealer for the latest information.

Key way dimensions
<Key way, center tap shaft>

[Unit: mm]

Connector type (IP67) · without brake · with oil seal · Round shaft/ Key way, center tap shaft

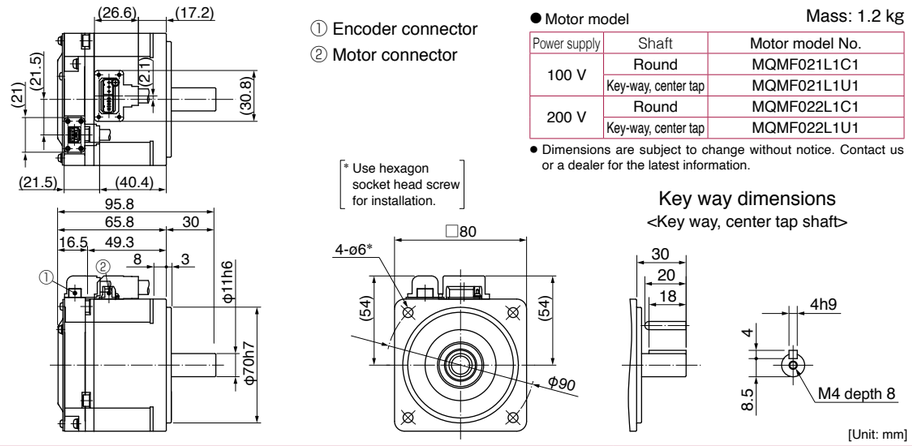

① Encoder connector
② Motor connector

● Motor model — Mass: 1.2 kg

Power supply	Shaft	Motor model No.
100 V	Round	MQMF021L1C1
	Key-way, center tap	MQMF021L1U1
200 V	Round	MQMF022L1C1
	Key-way, center tap	MQMF022L1U1

● Dimensions are subject to change without notice. Contact us or a dealer for the latest information.

Key way dimensions
<Key way, center tap shaft>

[Unit: mm]

Connector type (IP67) · without brake · with protective lip/ with oil seal · Round shaft/ Key way, center tap shaft

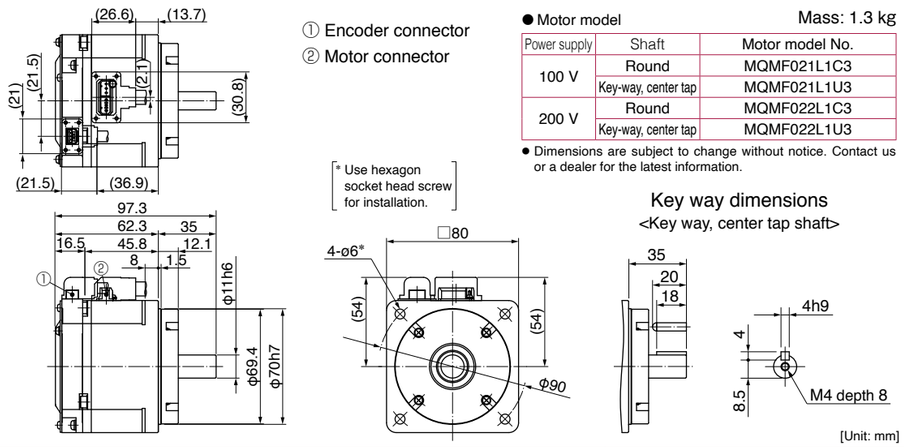

① Encoder connector
② Motor connector

● Motor model — Mass: 1.3 kg

Power supply	Shaft	Motor model No.
100 V	Round	MQMF021L1C3
	Key-way, center tap	MQMF021L1U3
200 V	Round	MQMF022L1C3
	Key-way, center tap	MQMF022L1U3

● Dimensions are subject to change without notice. Contact us or a dealer for the latest information.

Key way dimensions
<Key way, center tap shaft>

[Unit: mm]

* For motors specifications, refer to P.81, P.82.

MQMF 200 W

Connector type (IP67) · with brake · without oil seal · Round shaft/ Key way, center tap shaft

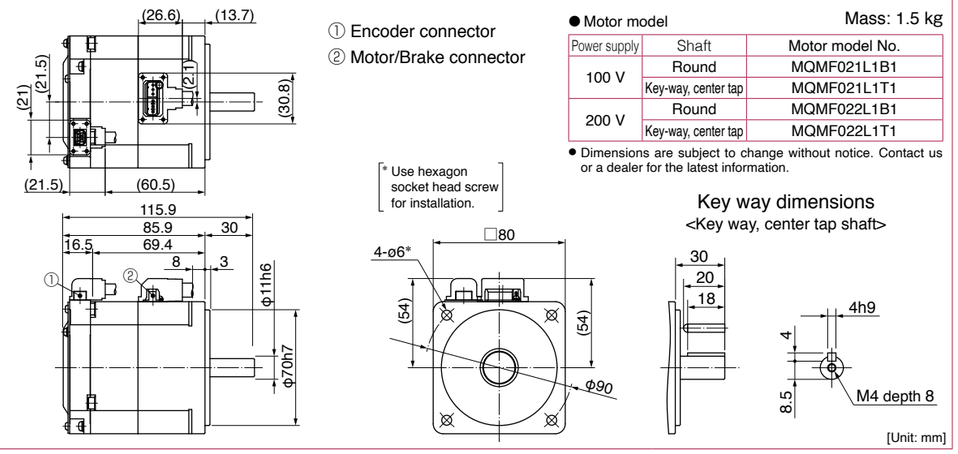

① Encoder connector
② Motor/Brake connector

● Motor model — Mass: 1.5 kg

Power supply	Shaft	Motor model No.
100 V	Round	MQMF021L1B1
	Key-way, center tap	MQMF021L1T1
200 V	Round	MQMF022L1B1
	Key-way, center tap	MQMF022L1T1

● Dimensions are subject to change without notice. Contact us or a dealer for the latest information.

Key way dimensions
<Key way, center tap shaft>

[Unit: mm]

Connector type (IP67) · with brake · with oil seal · Round shaft/ Key way, center tap shaft

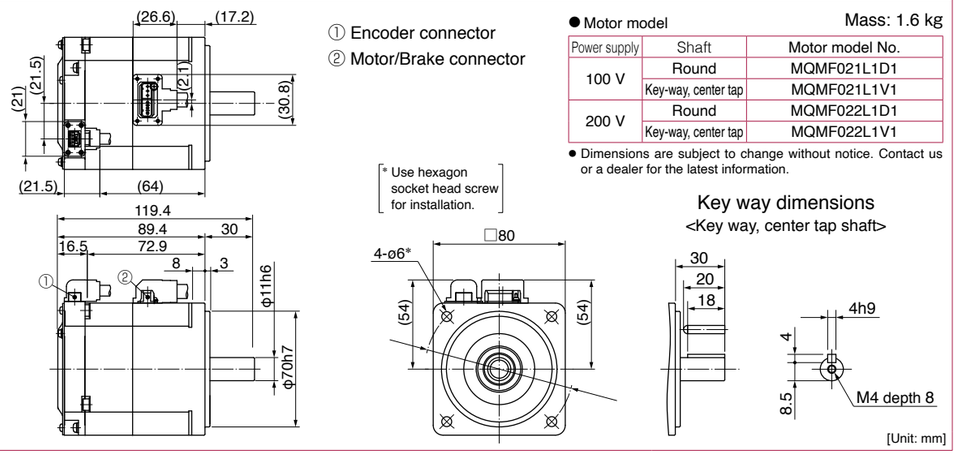

① Encoder connector
② Motor/Brake connector

● Motor model — Mass: 1.6 kg

Power supply	Shaft	Motor model No.
100 V	Round	MQMF021L1D1
	Key-way, center tap	MQMF021L1V1
200 V	Round	MQMF022L1D1
	Key-way, center tap	MQMF022L1V1

● Dimensions are subject to change without notice. Contact us or a dealer for the latest information.

Key way dimensions
<Key way, center tap shaft>

[Unit: mm]

Connector type (IP67) · with brake · with protective lip/ with oil seal · Round shaft/ Key way, center tap shaft

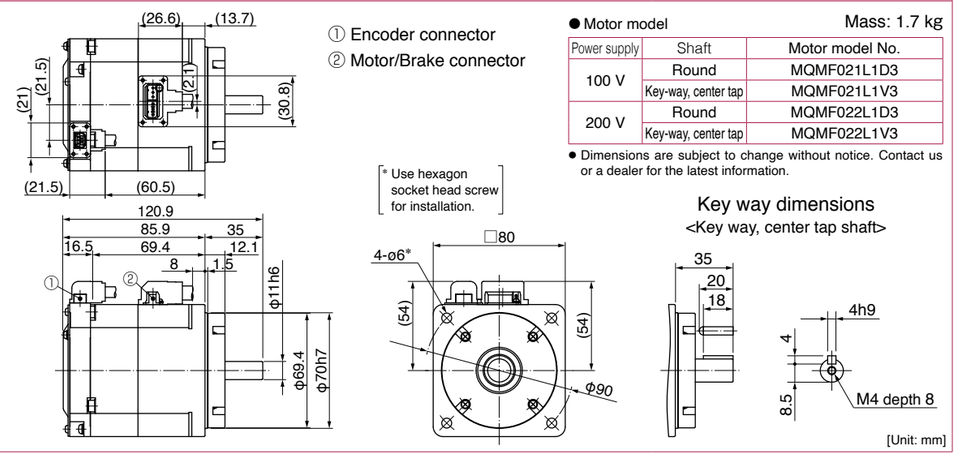

① Encoder connector
② Motor/Brake connector

● Motor model — Mass: 1.7 kg

Power supply	Shaft	Motor model No.
100 V	Round	MQMF021L1D3
	Key-way, center tap	MQMF021L1V3
200 V	Round	MQMF022L1D3
	Key-way, center tap	MQMF022L1V3

● Dimensions are subject to change without notice. Contact us or a dealer for the latest information.

Key way dimensions
<Key way, center tap shaft>

[Unit: mm]

* For motors specifications, refer to P.81, P.82.

MQMF 400 W

Leadwire type (IP65) · without brake · without oil seal · Round shaft/ Key way, center tap shaft

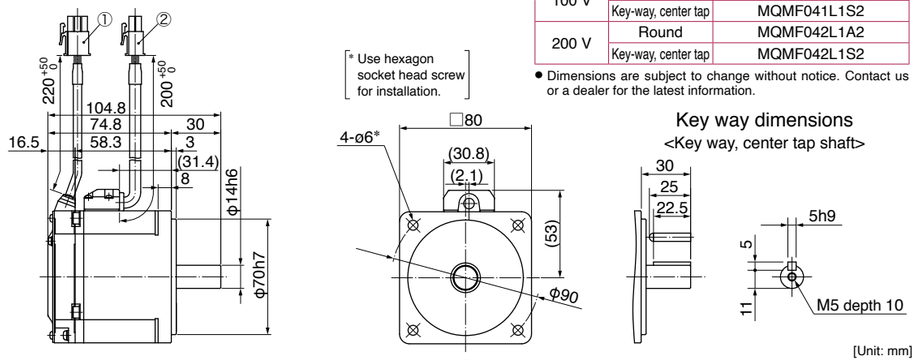

● Motor model — Mass: 1.5 kg

Power supply	Shaft	Motor model No.
100 V	Round	MQMF041L1A2
	Key-way, center tap	MQMF041L1S2
200 V	Round	MQMF042L1A2
	Key-way, center tap	MQMF042L1S2

● Dimensions are subject to change without notice. Contact us or a dealer for the latest information.

[Unit: mm]

Leadwire type (IP65) · without brake · with oil seal · Round shaft/ Key way, center tap shaft

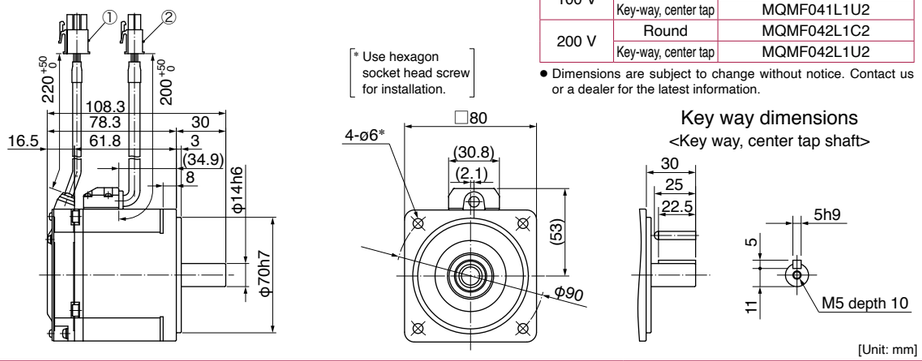

● Motor model — Mass: 1.6 kg

Power supply	Shaft	Motor model No.
100 V	Round	MQMF041L1C2
	Key-way, center tap	MQMF041L1U2
200 V	Round	MQMF042L1C2
	Key-way, center tap	MQMF042L1U2

● Dimensions are subject to change without notice. Contact us or a dealer for the latest information.

[Unit: mm]

Leadwire type (IP65) · without brake · with protective lip/ with oil seal · Round shaft/ Key way, center tap shaft

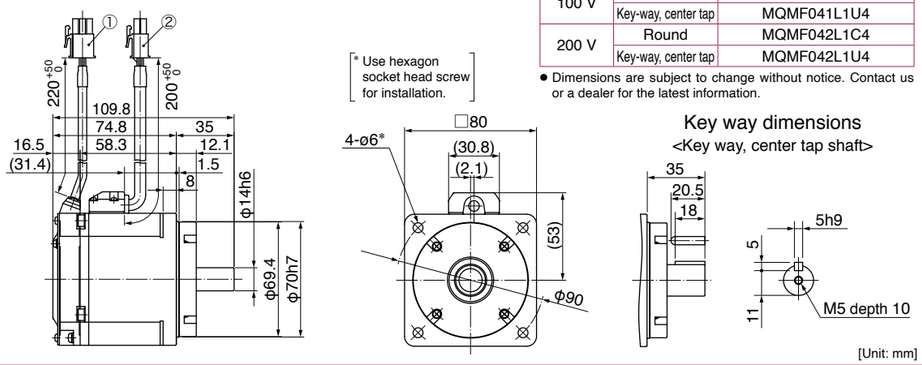

● Motor model — Mass: 1.7 kg

Power supply	Shaft	Motor model No.
100 V	Round	MQMF041L1C4
	Key-way, center tap	MQMF041L1U4
200 V	Round	MQMF042L1C4
	Key-way, center tap	MQMF042L1U4

● Dimensions are subject to change without notice. Contact us or a dealer for the latest information.

[Unit: mm]

* For motors specifications, refer to P.83, P.84.

MQMF 400 W

Leadwire type (IP65) · with brake · without oil seal · Round shaft/ Key way, center tap shaft

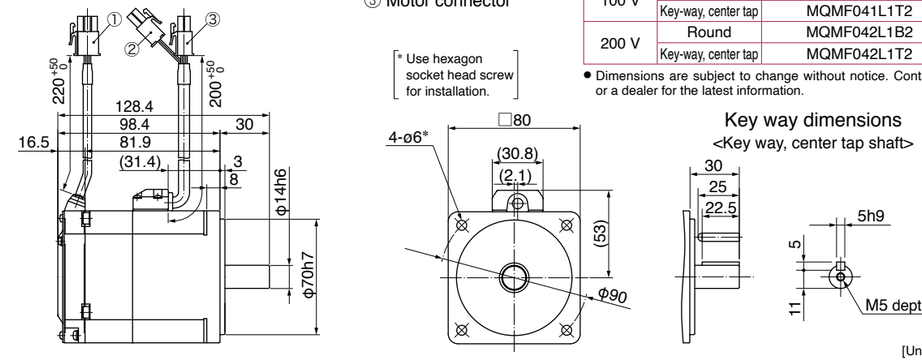

● Motor model — Mass: 2.0 kg

Power supply	Shaft	Motor model No.
100 V	Round	MQMF041L1B2
	Key-way, center tap	MQMF041L1T2
200 V	Round	MQMF042L1B2
	Key-way, center tap	MQMF042L1T2

● Dimensions are subject to change without notice. Contact us or a dealer for the latest information.

[Unit: mm]

Leadwire type (IP65) · with brake · with oil seal · Round shaft/ Key way, center tap shaft

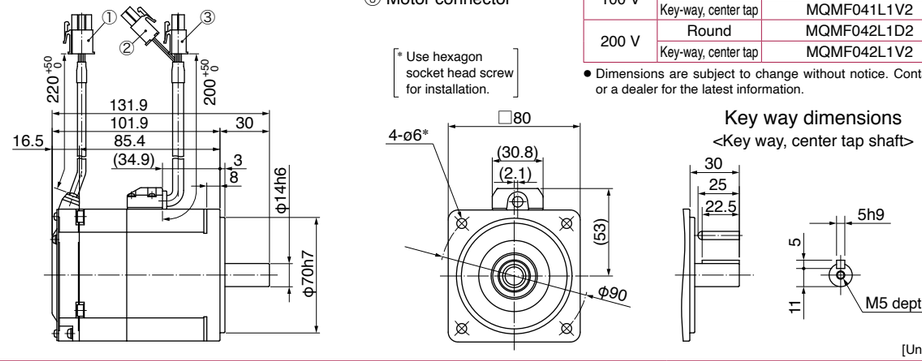

● Motor model — Mass: 2.1 kg

Power supply	Shaft	Motor model No.
100 V	Round	MQMF041L1D2
	Key-way, center tap	MQMF041L1V2
200 V	Round	MQMF042L1D2
	Key-way, center tap	MQMF042L1V2

● Dimensions are subject to change without notice. Contact us or a dealer for the latest information.

[Unit: mm]

Leadwire type (IP65) · with brake · with protective lip/ with oil seal · Round shaft/ Key way, center tap shaft

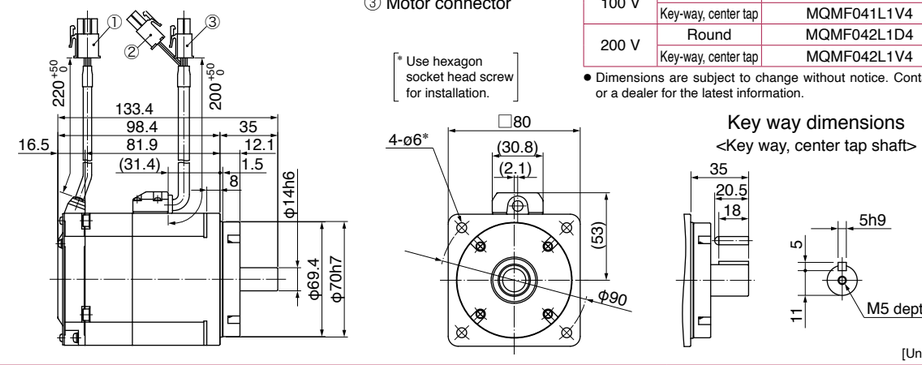

● Motor model — Mass: 2.2 kg

Power supply	Shaft	Motor model No.
100 V	Round	MQMF041L1D4
	Key-way, center tap	MQMF041L1V4
200 V	Round	MQMF042L1D4
	Key-way, center tap	MQMF042L1V4

● Dimensions are subject to change without notice. Contact us or a dealer for the latest information.

[Unit: mm]

* For motors specifications, refer to P.83, P.84.

MQMF 400 W

Connector type (IP67) · without brake · without oil seal · Round shaft/ Key way, center tap shaft

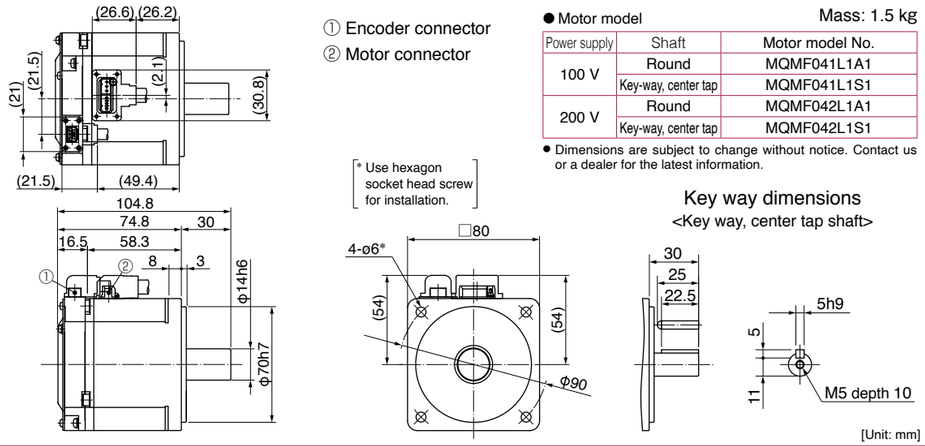

① Encoder connector
② Motor connector

● Motor model — Mass: 1.5 kg

Power supply	Shaft	Motor model No.
100 V	Round	MQMF041L1A1
	Key-way, center tap	MQMF041L1S1
200 V	Round	MQMF042L1A1
	Key-way, center tap	MQMF042L1S1

● Dimensions are subject to change without notice. Contact us or a dealer for the latest information.

Key way dimensions
<Key way, center tap shaft>

[Unit: mm]

Connector type (IP67) · without brake · with oil seal · Round shaft/ Key way, center tap shaft

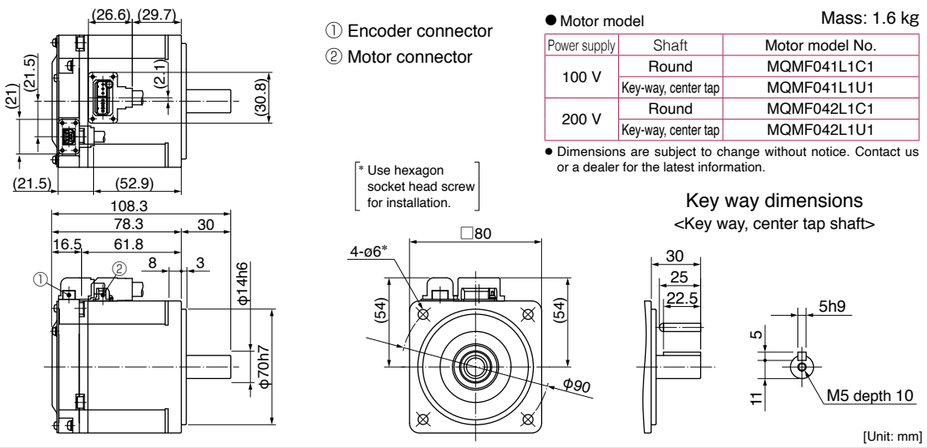

① Encoder connector
② Motor connector

● Motor model — Mass: 1.6 kg

Power supply	Shaft	Motor model No.
100 V	Round	MQMF041L1C1
	Key-way, center tap	MQMF041L1U1
200 V	Round	MQMF042L1C1
	Key-way, center tap	MQMF042L1U1

● Dimensions are subject to change without notice. Contact us or a dealer for the latest information.

Key way dimensions
<Key way, center tap shaft>

[Unit: mm]

Connector type (IP67) · without brake · with protective lip/ with oil seal · Round shaft/ Key way, center tap shaft

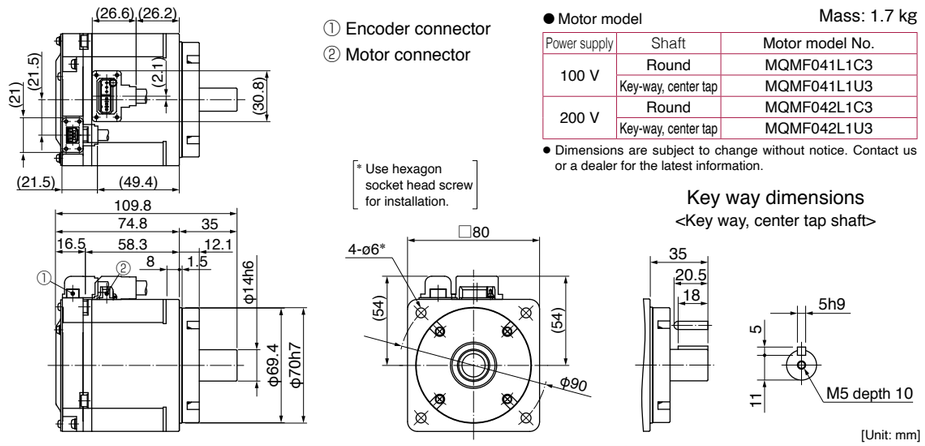

① Encoder connector
② Motor connector

● Motor model — Mass: 1.7 kg

Power supply	Shaft	Motor model No.
100 V	Round	MQMF041L1C3
	Key-way, center tap	MQMF041L1U3
200 V	Round	MQMF042L1C3
	Key-way, center tap	MQMF042L1U3

● Dimensions are subject to change without notice. Contact us or a dealer for the latest information.

Key way dimensions
<Key way, center tap shaft>

[Unit: mm]

* For motors specifications, refer to P.83, P.84.

MQMF 400 W

Connector type (IP67) · with brake · without oil seal · Round shaft/ Key way, center tap shaft

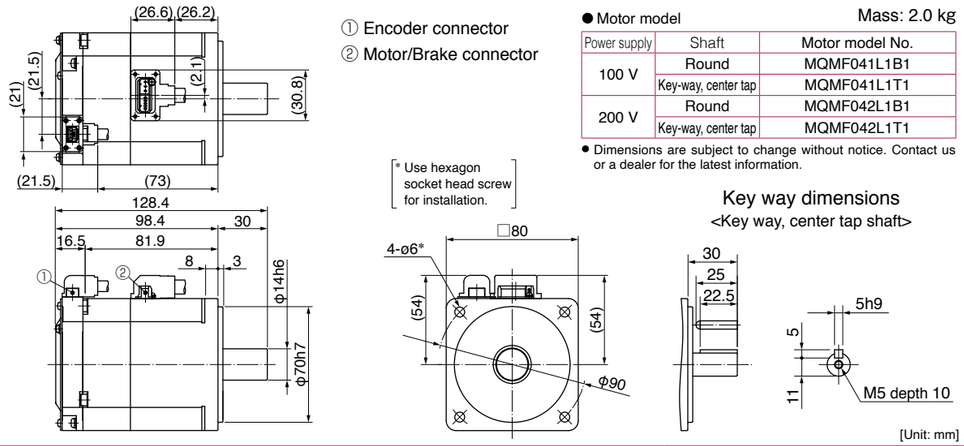

① Encoder connector
② Motor/Brake connector

● Motor model — Mass: 2.0 kg

Power supply	Shaft	Motor model No.
100 V	Round	MQMF041L1B1
	Key-way, center tap	MQMF041L1T1
200 V	Round	MQMF042L1B1
	Key-way, center tap	MQMF042L1T1

● Dimensions are subject to change without notice. Contact us or a dealer for the latest information.

Key way dimensions
<Key way, center tap shaft>

[Unit: mm]

Connector type (IP67) · with brake · with oil seal · Round shaft/ Key way, center tap shaft

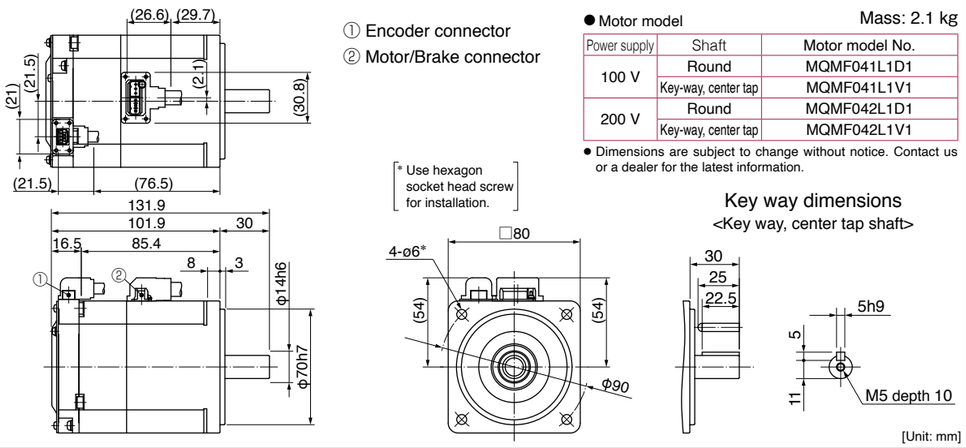

① Encoder connector
② Motor/Brake connector

● Motor model — Mass: 2.1 kg

Power supply	Shaft	Motor model No.
100 V	Round	MQMF041L1D1
	Key-way, center tap	MQMF041L1V1
200 V	Round	MQMF042L1D1
	Key-way, center tap	MQMF042L1V1

● Dimensions are subject to change without notice. Contact us or a dealer for the latest information.

Key way dimensions
<Key way, center tap shaft>

[Unit: mm]

Connector type (IP67) · with brake · with protective lip/ with oil seal · Round shaft/ Key way, center tap shaft

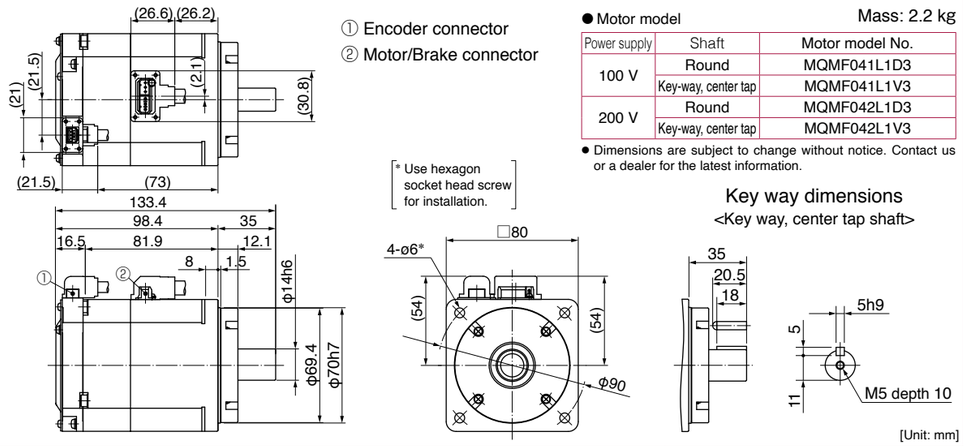

① Encoder connector
② Motor/Brake connector

● Motor model — Mass: 2.2 kg

Power supply	Shaft	Motor model No.
100 V	Round	MQMF041L1D3
	Key-way, center tap	MQMF041L1V3
200 V	Round	MQMF042L1D3
	Key-way, center tap	MQMF042L1V3

● Dimensions are subject to change without notice. Contact us or a dealer for the latest information.

Key way dimensions
<Key way, center tap shaft>

[Unit: mm]

* For motors specifications, refer to P.83, P.84.

MHMF 50 W

Leadwire type (IP65) · without brake · without oil seal · Round shaft/ Key way, center tap shaft

Mass: 0.29 kg

① Encoder connector
② Motor connector

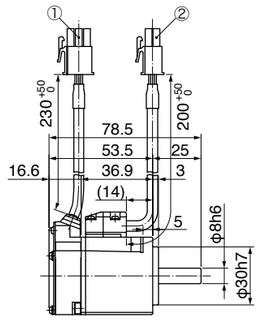

* Use hexagon socket head screw for installation.

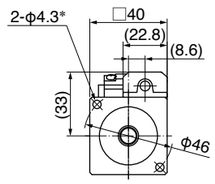

Key way dimensions
<Key way, center tap shaft>

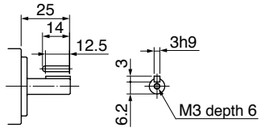

● Motor model

Power supply	Shaft	Motor model No.
100 V	Round	MHMF5AZL1A2
	Key-way, center tap	MHMF5AZL1S2
200 V	Round	MHMF5AZL1A2
	Key-way, center tap	MHMF5AZL1S2

● Dimensions are subject to change without notice. Contact us or a dealer for the latest information.

[Unit: mm]

Leadwire type (IP65) · without brake · with oil seal · Round shaft/ Key way, center tap shaft

Mass: 0.31 kg

① Encoder connector
② Motor connector

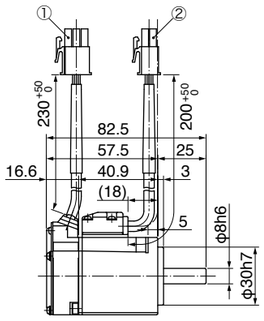

* Use hexagon socket head screw for installation.

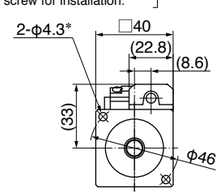

Key way dimensions
<Key way, center tap shaft>

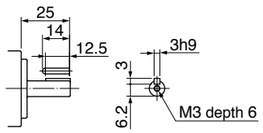

● Motor model

Power supply	Shaft	Motor model No.
100 V	Round	MHMF5AZL1C2
	Key-way, center tap	MHMF5AZL1U2
200 V	Round	MHMF5AZL1C2
	Key-way, center tap	MHMF5AZL1U2

● Dimensions are subject to change without notice. Contact us or a dealer for the latest information.

[Unit: mm]

Leadwire type (IP65) · without brake · with protective lip/ with oil seal · Round shaft/ Key way, center tap shaft

Mass: 0.32 kg

① Encoder connector
② Motor connector

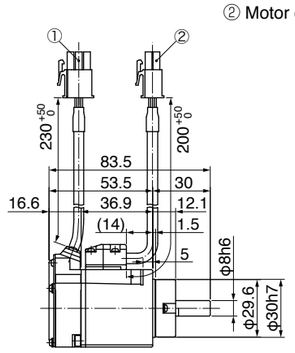

* Use hexagon socket head screw for installation.

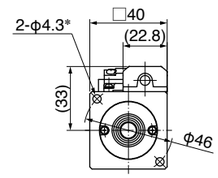

Key way dimensions
<Key way, center tap shaft>

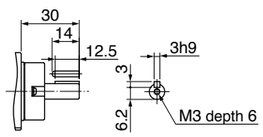

● Motor model

Power supply	Shaft	Motor model No.
100 V	Round	MHMF5AZL1C4
	Key-way, center tap	MHMF5AZL1U4
200 V	Round	MHMF5AZL1C4
	Key-way, center tap	MHMF5AZL1U4

● Dimensions are subject to change without notice. Contact us or a dealer for the latest information.

[Unit: mm]

* For motors specifications, refer to P.85, P.86.

MHMF 50 W

Leadwire type (IP65) · with brake · without oil seal · Round shaft/ Key way, center tap shaft

Mass: 0.51 kg

① Encoder connector
② Brake connector
③ Motor connector

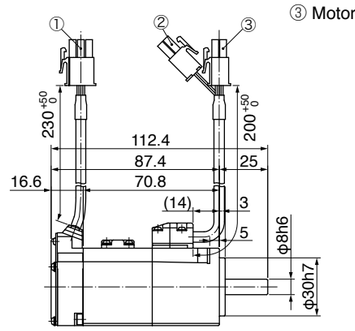

* Use hexagon socket head screw for installation.

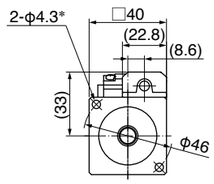

Key way dimensions
<Key way, center tap shaft>

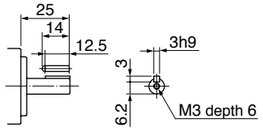

● Motor model

Power supply	Shaft	Motor model No.
100 V	Round	MHMF5AZL1B2
	Key-way, center tap	MHMF5AZL1T2
200 V	Round	MHMF5AZL1B2
	Key-way, center tap	MHMF5AZL1T2

● Dimensions are subject to change without notice. Contact us or a dealer for the latest information.

[Unit: mm]

Leadwire type (IP65) · with brake · with oil seal · Round shaft/ Key way, center tap shaft

Mass: 0.53 kg

① Encoder connector
② Brake connector
③ Motor connector

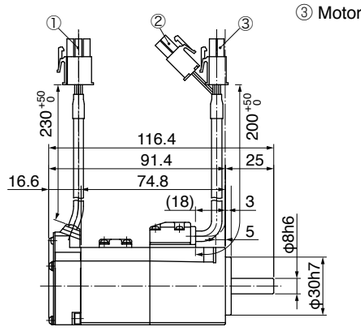

* Use hexagon socket head screw for installation.

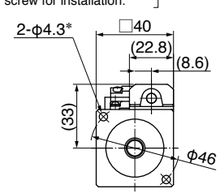

Key way dimensions
<Key way, center tap shaft>

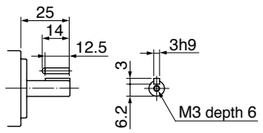

● Motor model

Power supply	Shaft	Motor model No.
100 V	Round	MHMF5AZL1D2
	Key-way, center tap	MHMF5AZL1V2
200 V	Round	MHMF5AZL1D2
	Key-way, center tap	MHMF5AZL1V2

● Dimensions are subject to change without notice. Contact us or a dealer for the latest information.

[Unit: mm]

Leadwire type (IP65) · with brake · with protective lip/ with oil seal · Round shaft/ Key way, center tap shaft

Mass: 0.54 kg

① Encoder connector
② Brake connector
③ Motor connector

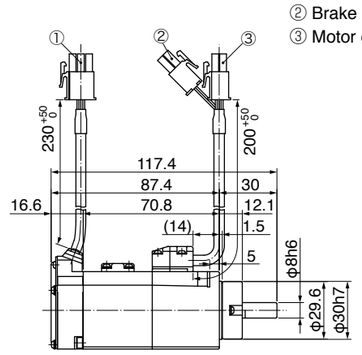

* Use hexagon socket head screw for installation.

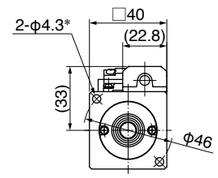

Key way dimensions
<Key way, center tap shaft>

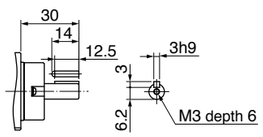

● Motor model

Power supply	Shaft	Motor model No.
100 V	Round	MHMF5AZL1D4
	Key-way, center tap	MHMF5AZL1V4
200 V	Round	MHMF5AZL1D4
	Key-way, center tap	MHMF5AZL1V4

● Dimensions are subject to change without notice. Contact us or a dealer for the latest information.

[Unit: mm]

* For motors specifications, refer to P.85, P.86.

MHMF 50 W

Connector type (IP67) · without brake · without oil seal · Round shaft/ Key way, center tap shaft

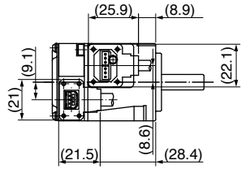

① Encoder connector
② Motor connector

Mass: 0.29 kg

● Motor model

Power supply	Shaft	Motor model No.
100 V	Round	MHMF5AZL1A1
	Key-way, center tap	MHMF5AZL1S1
200 V	Round	MHMF5AZL1A1
	Key-way, center tap	MHMF5AZL1S1

● Dimensions are subject to change without notice. Contact us or a dealer for the latest information.

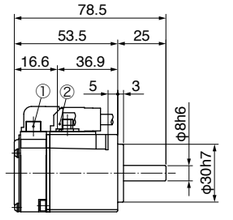

[* Use hexagon socket head screw for installation.]

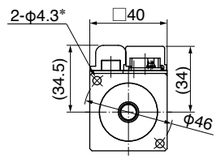

Key way dimensions
<Key way, center tap shaft>

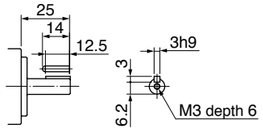

[Unit: mm]

Connector type (IP67) · without brake · with oil seal · Round shaft/ Key way, center tap shaft

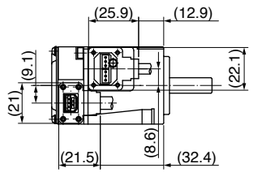

① Encoder connector
② Motor connector

Mass: 0.31 kg

● Motor model

Power supply	Shaft	Motor model No.
100 V	Round	MHMF5AZL1C1
	Key-way, center tap	MHMF5AZL1U1
200 V	Round	MHMF5AZL1C1
	Key-way, center tap	MHMF5AZL1U1

● Dimensions are subject to change without notice. Contact us or a dealer for the latest information.

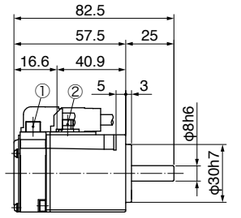

[* Use hexagon socket head screw for installation.]

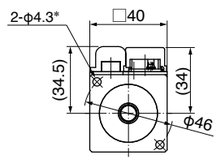

Key way dimensions
<Key way, center tap shaft>

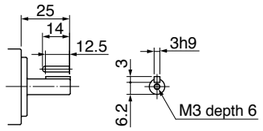

[Unit: mm]

Connector type (IP67) · without brake · with protective lip/ with oil seal · Round shaft/ Key way, center tap shaft

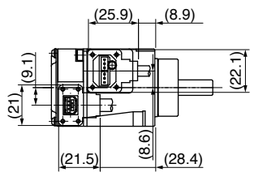

① Encoder connector
② Motor connector

Mass: 0.32 kg

● Motor model

Power supply	Shaft	Motor model No.
100 V	Round	MHMF5AZL1C3
	Key-way, center tap	MHMF5AZL1U3
200 V	Round	MHMF5AZL1C3
	Key-way, center tap	MHMF5AZL1U3

● Dimensions are subject to change without notice. Contact us or a dealer for the latest information.

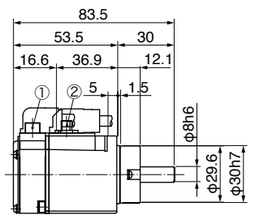

[* Use hexagon socket head screw for installation.]

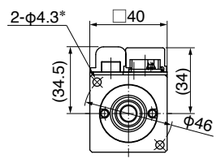

Key way dimensions
<Key way, center tap shaft>

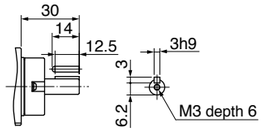

[Unit: mm]

* For motors specifications, refer to P.85, P.86.

MHMF 50 W

Connector type (IP67) · with brake · without oil seal · Round shaft/ Key way, center tap shaft

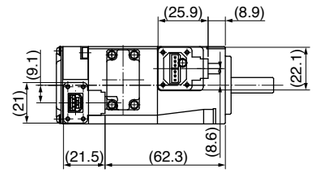

① Encoder connector
② Motor/Brake connector

Mass: 0.51 kg

● Motor model

Power supply	Shaft	Motor model No.
100 V	Round	MHMF5AZL1B1
	Key-way, center tap	MHMF5AZL1T1
200 V	Round	MHMF5AZL1B1
	Key-way, center tap	MHMF5AZL1T1

● Dimensions are subject to change without notice. Contact us or a dealer for the latest information.

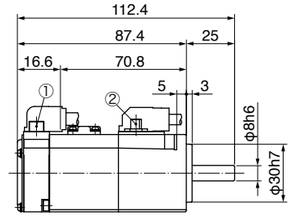

[* Use hexagon socket head screw for installation.]

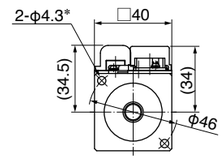

Key way dimensions
<Key way, center tap shaft>

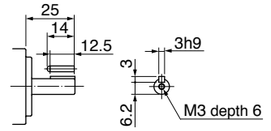

[Unit: mm]

Connector type (IP67) · with brake · with oil seal · Round shaft/ Key way, center tap shaft

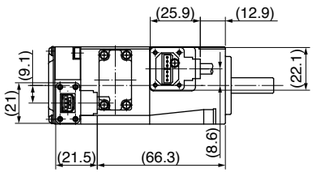

① Encoder connector
② Motor/Brake connector

Mass: 0.53 kg

● Motor model

Power supply	Shaft	Motor model No.
100 V	Round	MHMF5AZL1D1
	Key-way, center tap	MHMF5AZL1V1
200 V	Round	MHMF5AZL1D1
	Key-way, center tap	MHMF5AZL1V1

● Dimensions are subject to change without notice. Contact us or a dealer for the latest information.

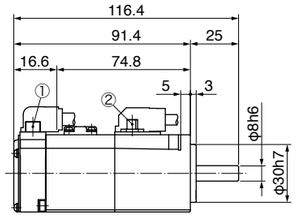

[* Use hexagon socket head screw for installation.]

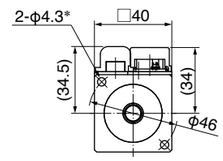

Key way dimensions
<Key way, center tap shaft>

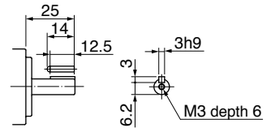

[Unit: mm]

Connector type (IP67) · with brake · with protective lip/ with oil seal · Round shaft/ Key way, center tap shaft

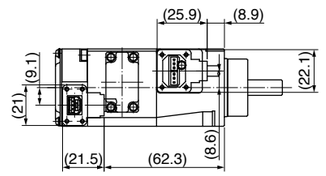

① Encoder connector
② Motor/Brake connector

Mass: 0.54 kg

● Motor model

Power supply	Shaft	Motor model No.
100 V	Round	MHMF5AZL1D3
	Key-way, center tap	MHMF5AZL1V3
200 V	Round	MHMF5AZL1D3
	Key-way, center tap	MHMF5AZL1V3

● Dimensions are subject to change without notice. Contact us or a dealer for the latest information.

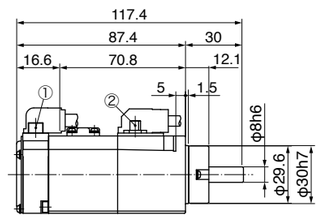

[* Use hexagon socket head screw for installation.]

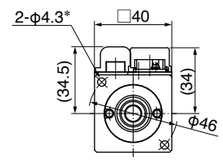

Key way dimensions
<Key way, center tap shaft>

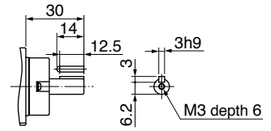

[Unit: mm]

* For motors specifications, refer to P.85, P.86.

MHMF 100 W

Leadwire type (IP65) · without brake · without oil seal · Round shaft/ Key way, center tap shaft

Mass: 0.40 kg

① Encoder connector
② Motor connector

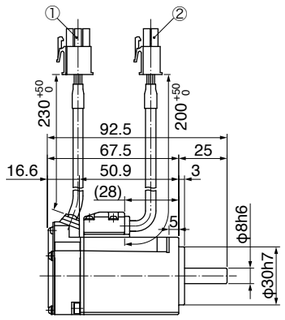

[* Use hexagon socket head screw for installation.]

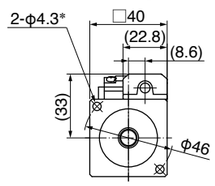

Key way dimensions
<Key way, center tap shaft>

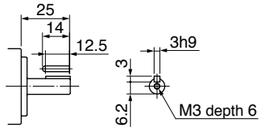

● Motor model

Power supply	Shaft	Motor model No.
100 V	Round	MHMF011L1A2
	Key-way, center tap	MHMF011L1S2
200 V	Round	MHMF012L1A2
	Key-way, center tap	MHMF012L1S2

● Dimensions are subject to change without notice. Contact us or a dealer for the latest information.

[Unit: mm]

Leadwire type (IP65) · without brake · with oil seal · Round shaft/ Key way, center tap shaft

Mass: 0.42 kg

① Encoder connector
② Motor connector

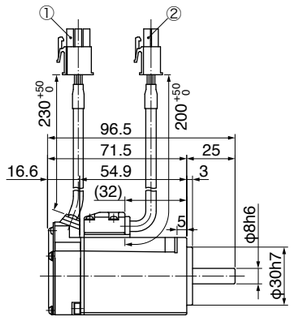

[* Use hexagon socket head screw for installation.]

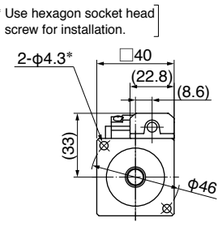

Key way dimensions
<Key way, center tap shaft>

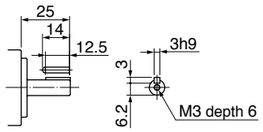

● Motor model

Power supply	Shaft	Motor model No.
100 V	Round	MHMF011L1C2
	Key-way, center tap	MHMF011L1U2
200 V	Round	MHMF012L1C2
	Key-way, center tap	MHMF012L1U2

● Dimensions are subject to change without notice. Contact us or a dealer for the latest information.

[Unit: mm]

Leadwire type (IP65) · without brake · with protective lip/ with oil seal · Round shaft/ Key way, center tap shaft

Mass: 0.43 kg

① Encoder connector
② Motor connector

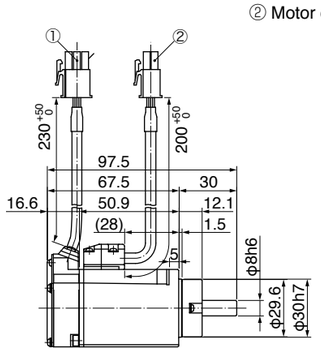

[* Use hexagon socket head screw for installation.]

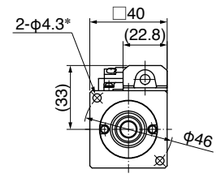

Key way dimensions
<Key way, center tap shaft>

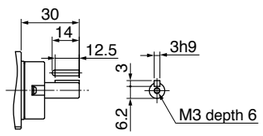

● Motor model

Power supply	Shaft	Motor model No.
100 V	Round	MHMF011L1C4
	Key-way, center tap	MHMF011L1U4
200 V	Round	MHMF012L1C4
	Key-way, center tap	MHMF012L1U4

● Dimensions are subject to change without notice. Contact us or a dealer for the latest information.

[Unit: mm]

* For motors specifications, refer to P.87, P.88.

MHMF 100 W

Leadwire type (IP65) · with brake · without oil seal · Round shaft/ Key way, center tap shaft

Mass: 0.62 kg

① Encoder connector
② Brake connector
③ Motor connector

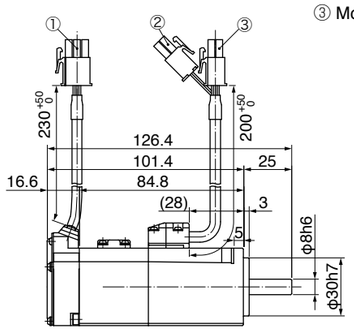

[* Use hexagon socket head screw for installation.]

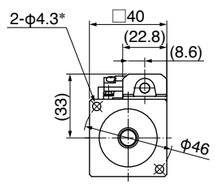

Key way dimensions
<Key way, center tap shaft>

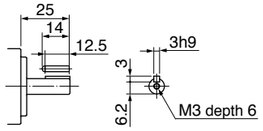

● Motor model

Power supply	Shaft	Motor model No.
100 V	Round	MHMF011L1B2
	Key-way, center tap	MHMF011L1T2
200 V	Round	MHMF012L1B2
	Key-way, center tap	MHMF012L1T2

● Dimensions are subject to change without notice. Contact us or a dealer for the latest information.

[Unit: mm]

Leadwire type (IP65) · with brake · with oil seal · Round shaft/ Key way, center tap shaft

Mass: 0.64 kg

① Encoder connector
② Brake connector
③ Motor connector

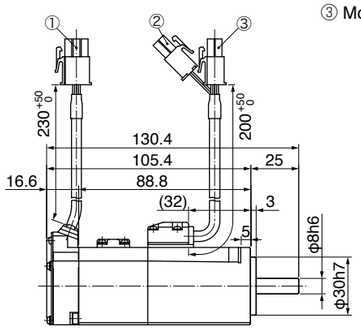

[* Use hexagon socket head screw for installation.]

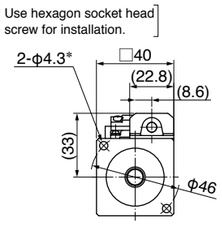

Key way dimensions
<Key way, center tap shaft>

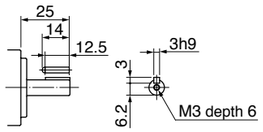

● Motor model

Power supply	Shaft	Motor model No.
100 V	Round	MHMF011L1D2
	Key-way, center tap	MHMF011L1V2
200 V	Round	MHMF012L1D2
	Key-way, center tap	MHMF012L1V2

● Dimensions are subject to change without notice. Contact us or a dealer for the latest information.

[Unit: mm]

Leadwire type (IP65) · with brake · with protective lip/ with oil seal · Round shaft/ Key way, center tap shaft

Mass: 0.65 kg

① Encoder connector
② Brake connector
③ Motor connector

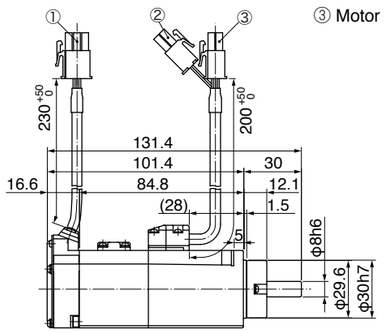

[* Use hexagon socket head screw for installation.]

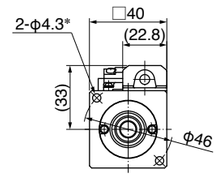

Key way dimensions
<Key way, center tap shaft>

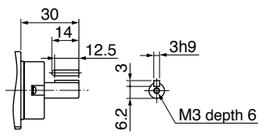

● Motor model

Power supply	Shaft	Motor model No.
100 V	Round	MHMF011L1D4
	Key-way, center tap	MHMF011L1V4
200 V	Round	MHMF012L1D4
	Key-way, center tap	MHMF012L1V4

● Dimensions are subject to change without notice. Contact us or a dealer for the latest information.

[Unit: mm]

* For motors specifications, refer to P.87, P.88.

MHMF 100 W

Connector type (IP67) · without brake · without oil seal · Round shaft/ Key way, center tap shaft

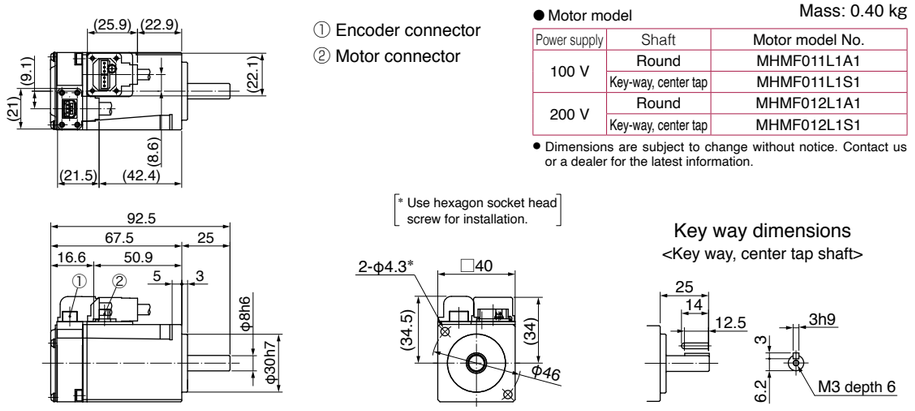

① Encoder connector
② Motor connector

Mass: 0.40 kg

● Motor model

Power supply	Shaft	Motor model No.
100 V	Round	MHMF011L1A1
	Key-way, center tap	MHMF011L1S1
200 V	Round	MHMF012L1A1
	Key-way, center tap	MHMF012L1S1

● Dimensions are subject to change without notice. Contact us or a dealer for the latest information.

[Unit: mm]

Connector type (IP67) · without brake · with oil seal · Round shaft/ Key way, center tap shaft

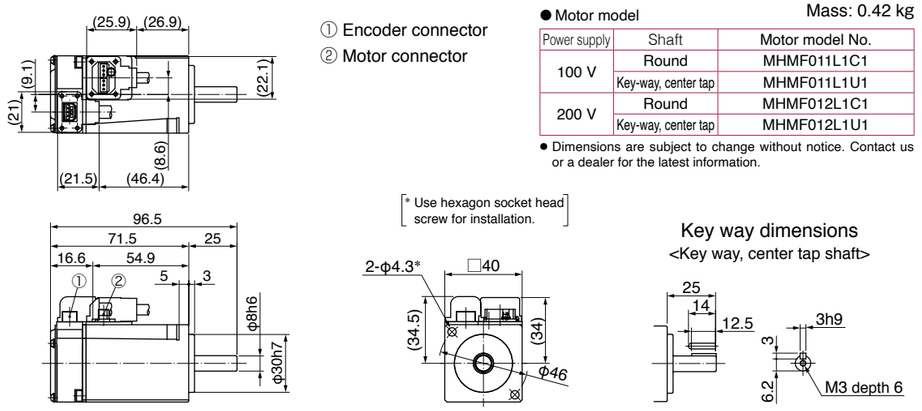

① Encoder connector
② Motor connector

Mass: 0.42 kg

● Motor model

Power supply	Shaft	Motor model No.
100 V	Round	MHMF011L1C1
	Key-way, center tap	MHMF011L1U1
200 V	Round	MHMF012L1C1
	Key-way, center tap	MHMF012L1U1

● Dimensions are subject to change without notice. Contact us or a dealer for the latest information.

[Unit: mm]

Connector type (IP67) · without brake · with protective lip/ with oil seal · Round shaft/ Key way, center tap shaft

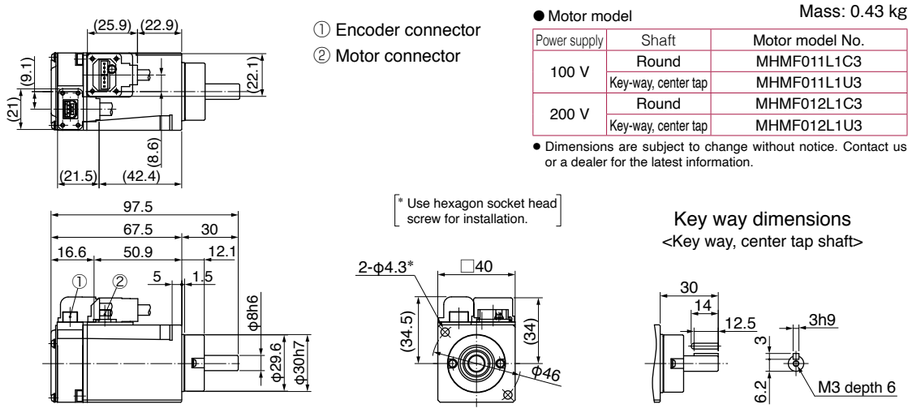

① Encoder connector
② Motor connector

Mass: 0.43 kg

● Motor model

Power supply	Shaft	Motor model No.
100 V	Round	MHMF011L1C3
	Key-way, center tap	MHMF011L1U3
200 V	Round	MHMF012L1C3
	Key-way, center tap	MHMF012L1U3

● Dimensions are subject to change without notice. Contact us or a dealer for the latest information.

[Unit: mm]

* For motors specifications, refer to P.87, P.88.

MHMF 100 W

Connector type (IP67) · with brake · without oil seal · Round shaft/ Key way, center tap shaft

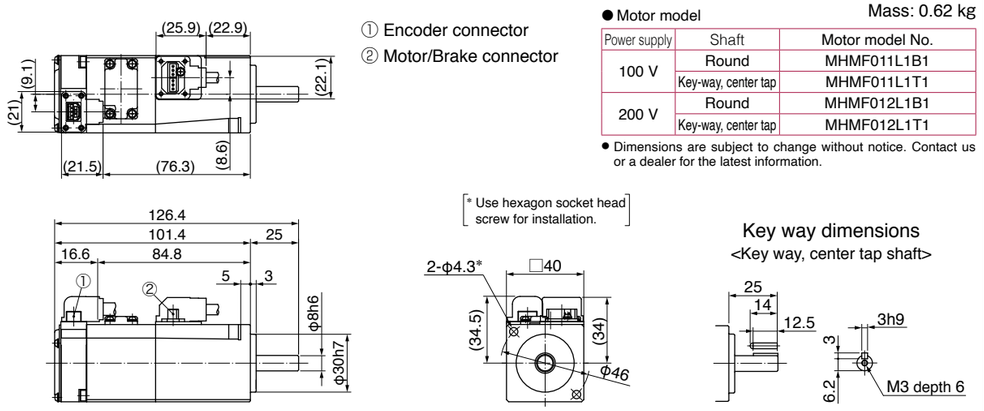

① Encoder connector
② Motor/Brake connector

Mass: 0.62 kg

● Motor model

Power supply	Shaft	Motor model No.
100 V	Round	MHMF011L1B1
	Key-way, center tap	MHMF011L1T1
200 V	Round	MHMF012L1B1
	Key-way, center tap	MHMF012L1T1

● Dimensions are subject to change without notice. Contact us or a dealer for the latest information.

[Unit: mm]

Connector type (IP67) · with brake · with oil seal · Round shaft/ Key way, center tap shaft

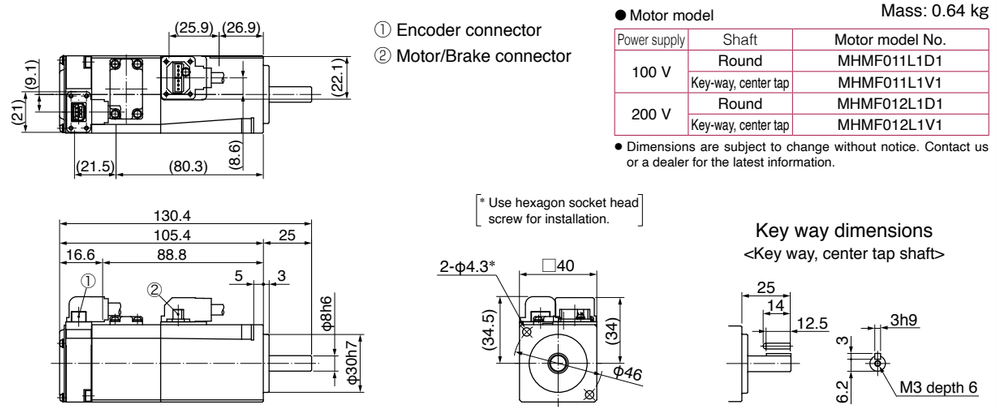

① Encoder connector
② Motor/Brake connector

Mass: 0.64 kg

● Motor model

Power supply	Shaft	Motor model No.
100 V	Round	MHMF011L1D1
	Key-way, center tap	MHMF011L1V1
200 V	Round	MHMF012L1D1
	Key-way, center tap	MHMF012L1V1

● Dimensions are subject to change without notice. Contact us or a dealer for the latest information.

[Unit: mm]

Connector type (IP67) · with brake · with protective lip/ with oil seal · Round shaft/ Key way, center tap shaft

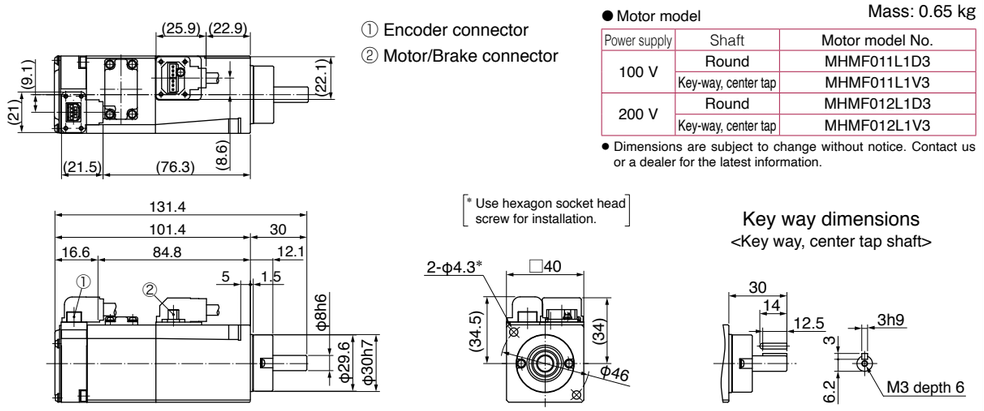

① Encoder connector
② Motor/Brake connector

Mass: 0.65 kg

● Motor model

Power supply	Shaft	Motor model No.
100 V	Round	MHMF011L1D3
	Key-way, center tap	MHMF011L1V3
200 V	Round	MHMF012L1D3
	Key-way, center tap	MHMF012L1V3

● Dimensions are subject to change without notice. Contact us or a dealer for the latest information.

[Unit: mm]

* For motors specifications, refer to P.87, P.88.

MHMF 200 W

Leadwire type (IP65) · without brake · without oil seal · Round shaft/ Key way, center tap shaft

Mass: 0.75 kg

① Encoder connector
② Motor connector

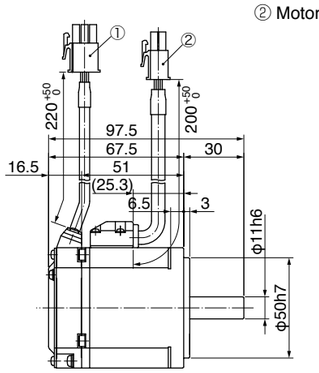

[* Use hexagon socket head screw for installation.]

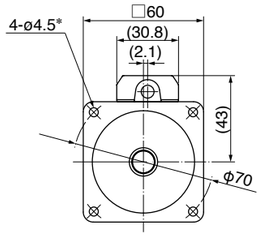

● Motor model

Power supply	Shaft	Motor model No.
100 V	Round	MHMF021L1A2
	Key-way, center tap	MHMF021L1S2
200 V	Round	MHMF022L1A2
	Key-way, center tap	MHMF022L1S2

● Dimensions are subject to change without notice. Contact us or a dealer for the latest information.

Key way dimensions
<Key way, center tap shaft>

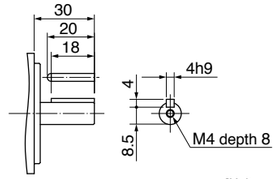

[Unit: mm]

Leadwire type (IP65) · without brake · with oil seal · Round shaft/ Key way, center tap shaft

Mass: 0.78 kg

① Encoder connector
② Motor connector

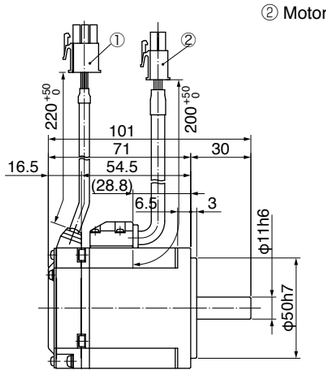

[* Use hexagon socket head screw for installation.]

● Motor model

Power supply	Shaft	Motor model No.
100 V	Round	MHMF021L1C2
	Key-way, center tap	MHMF021L1U2
200 V	Round	MHMF022L1C2
	Key-way, center tap	MHMF022L1U2

● Dimensions are subject to change without notice. Contact us or a dealer for the latest information.

Key way dimensions
<Key way, center tap shaft>

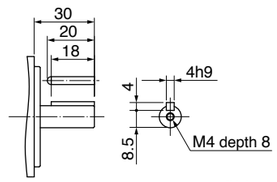

[Unit: mm]

Leadwire type (IP65) · without brake · with protective lip/ with oil seal · Round shaft/ Key way, center tap shaft

Mass: 0.81 kg

① Encoder connector
② Motor connector

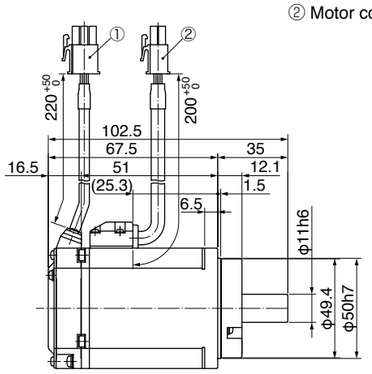

[* Use hexagon socket head screw for installation.]

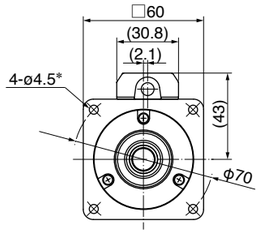

● Motor model

Power supply	Shaft	Motor model No.
100 V	Round	MHMF021L1C4
	Key-way, center tap	MHMF021L1U4
200 V	Round	MHMF022L1C4
	Key-way, center tap	MHMF022L1U4

● Dimensions are subject to change without notice. Contact us or a dealer for the latest information.

Key way dimensions
<Key way, center tap shaft>

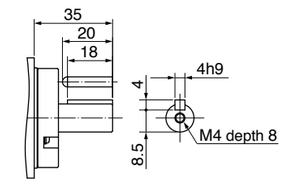

[Unit: mm]

* For motors specifications, refer to P.89, P.90.

MHMF 200 W

Leadwire type (IP65) · with brake · without oil seal · Round shaft/ Key way, center tap shaft

Mass: 1.1 kg

① Encoder connector
② Brake connector
③ Motor connector

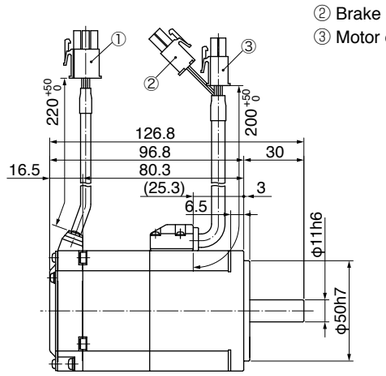

[* Use hexagon socket head screw for installation.]

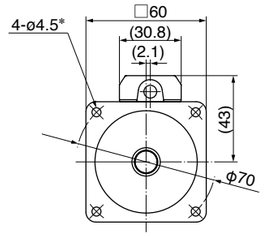

● Motor model

Power supply	Shaft	Motor model No.
100 V	Round	MHMF021L1B2
	Key-way, center tap	MHMF021L1T2
200 V	Round	MHMF022L1B2
	Key-way, center tap	MHMF022L1T2

● Dimensions are subject to change without notice. Contact us or a dealer for the latest information.

Key way dimensions
<Key way, center tap shaft>

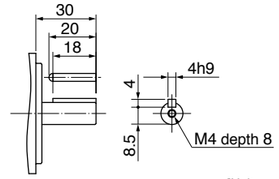

[Unit: mm]

Leadwire type (IP65) · with brake · with oil seal · Round shaft/ Key way, center tap shaft

Mass: 1.2 kg

① Encoder connector
② Brake connector
③ Motor connector

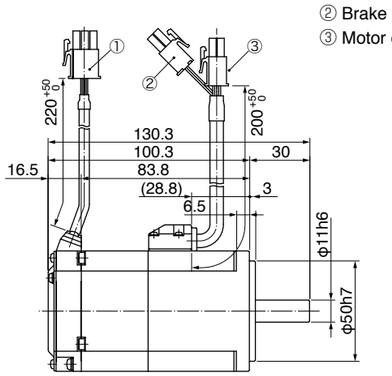

[* Use hexagon socket head screw for installation.]

● Motor model

Power supply	Shaft	Motor model No.
100 V	Round	MHMF021L1D2
	Key-way, center tap	MHMF021L1V2
200 V	Round	MHMF022L1D2
	Key-way, center tap	MHMF022L1V2

● Dimensions are subject to change without notice. Contact us or a dealer for the latest information.

Key way dimensions
<Key way, center tap shaft>

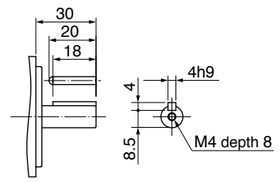

[Unit: mm]

Leadwire type (IP65) · with brake · with protective lip/ with oil seal · Round shaft/ Key way, center tap shaft

Mass: 1.2 kg

① Encoder connector
② Brake connector
③ Motor connector

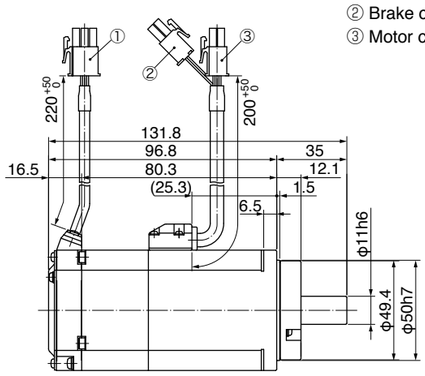

[* Use hexagon socket head screw for installation.]

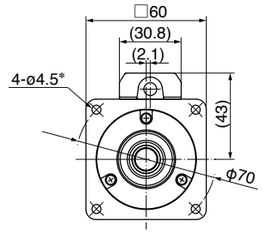

● Motor model

Power supply	Shaft	Motor model No.
100 V	Round	MHMF021L1D4
	Key-way, center tap	MHMF021L1V4
200 V	Round	MHMF022L1D4
	Key-way, center tap	MHMF022L1V4

● Dimensions are subject to change without notice. Contact us or a dealer for the latest information.

Key way dimensions
<Key way, center tap shaft>

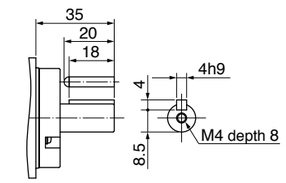

[Unit: mm]

* For motors specifications, refer to P.89, P.90.

MHMF 200 W

Connector type (IP67) · without brake · without oil seal · Round shaft/ Key way, center tap shaft

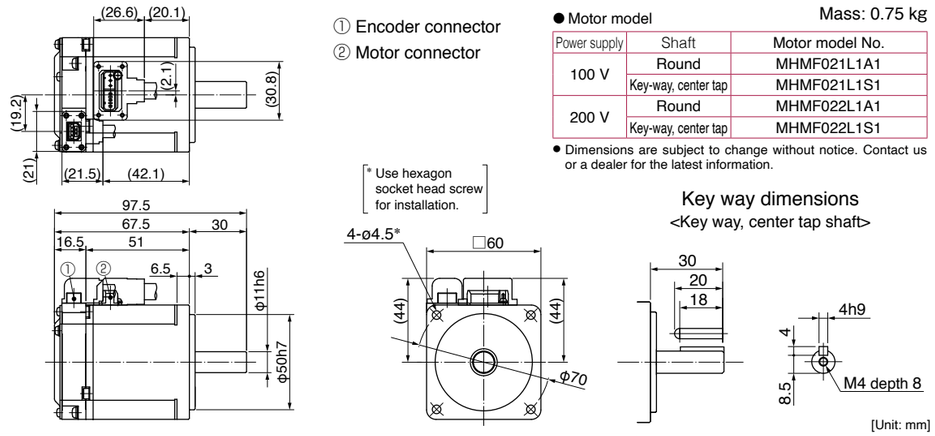

① Encoder connector
② Motor connector

● Motor model — Mass: 0.75 kg

Power supply	Shaft	Motor model No.
100 V	Round	MHMF021L1A1
	Key-way, center tap	MHMF021L1S1
200 V	Round	MHMF022L1A1
	Key-way, center tap	MHMF022L1S1

● Dimensions are subject to change without notice. Contact us or a dealer for the latest information.

Key way dimensions
<Key way, center tap shaft>

[Unit: mm]

Connector type (IP67) · without brake · with oil seal · Round shaft/ Key way, center tap shaft

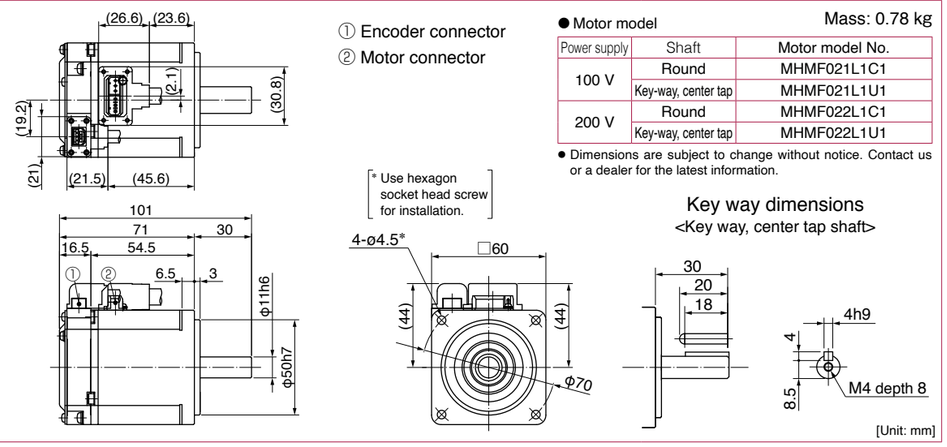

① Encoder connector
② Motor connector

● Motor model — Mass: 0.78 kg

Power supply	Shaft	Motor model No.
100 V	Round	MHMF021L1C1
	Key-way, center tap	MHMF021L1U1
200 V	Round	MHMF022L1C1
	Key-way, center tap	MHMF022L1U1

● Dimensions are subject to change without notice. Contact us or a dealer for the latest information.

Key way dimensions
<Key way, center tap shaft>

[Unit: mm]

Connector type (IP67) · without brake · with protective lip/ with oil seal · Round shaft/ Key way, center tap shaft

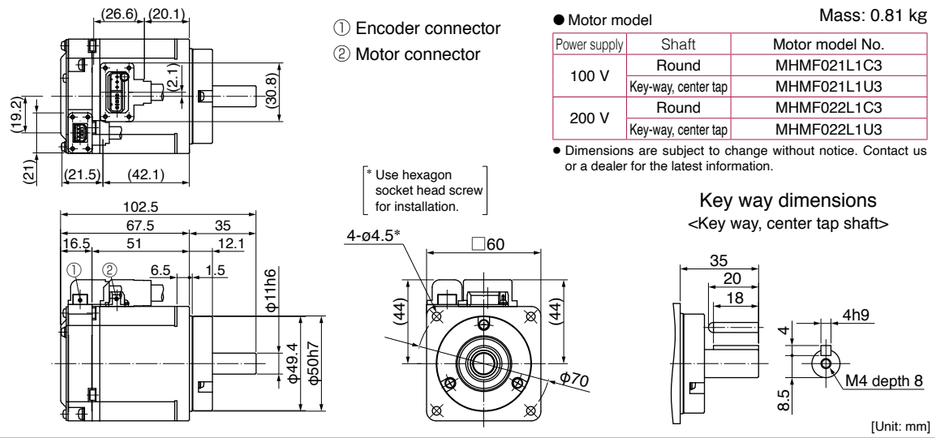

① Encoder connector
② Motor connector

● Motor model — Mass: 0.81 kg

Power supply	Shaft	Motor model No.
100 V	Round	MHMF021L1C3
	Key-way, center tap	MHMF021L1U3
200 V	Round	MHMF022L1C3
	Key-way, center tap	MHMF022L1U3

● Dimensions are subject to change without notice. Contact us or a dealer for the latest information.

Key way dimensions
<Key way, center tap shaft>

[Unit: mm]

* For motors specifications, refer to P.89, P.90.

MHMF 200 W

Connector type (IP67) · with brake · without oil seal · Round shaft/ Key way, center tap shaft

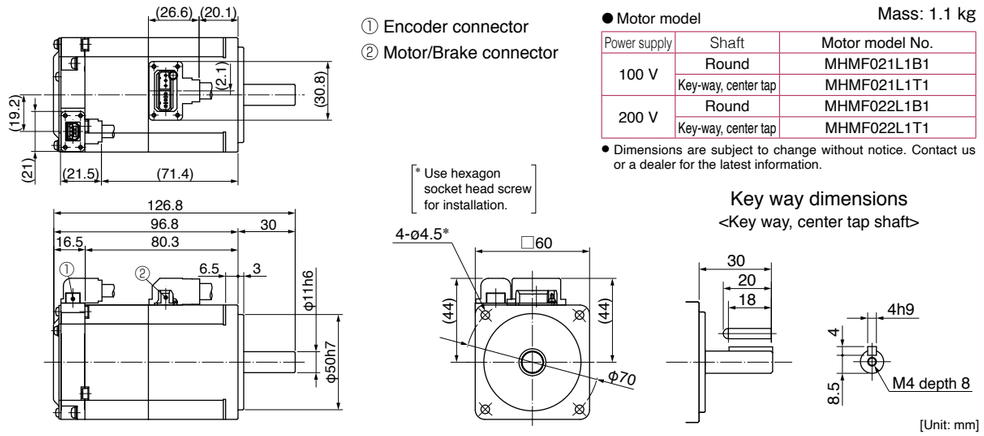

① Encoder connector
② Motor/Brake connector

● Motor model — Mass: 1.1 kg

Power supply	Shaft	Motor model No.
100 V	Round	MHMF021L1B1
	Key-way, center tap	MHMF021L1T1
200 V	Round	MHMF022L1B1
	Key-way, center tap	MHMF022L1T1

● Dimensions are subject to change without notice. Contact us or a dealer for the latest information.

Key way dimensions
<Key way, center tap shaft>

[Unit: mm]

Connector type (IP67) · with brake · with oil seal · Round shaft/ Key way, center tap shaft

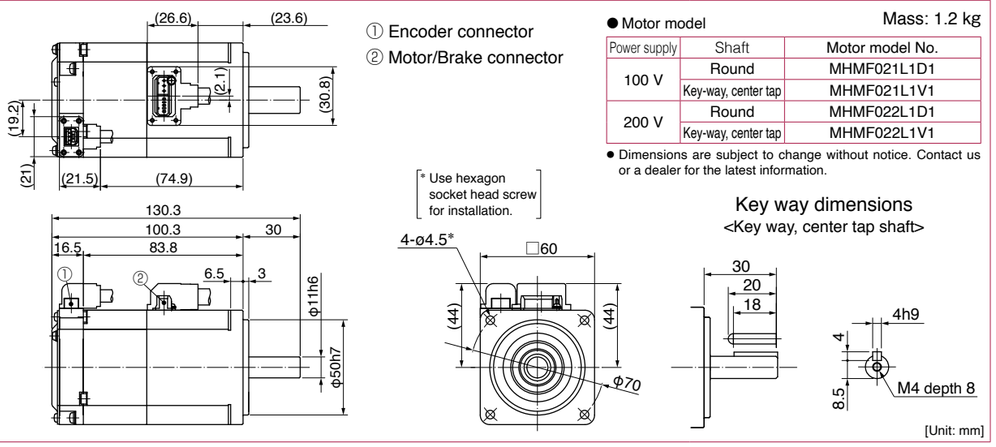

① Encoder connector
② Motor/Brake connector

● Motor model — Mass: 1.2 kg

Power supply	Shaft	Motor model No.
100 V	Round	MHMF021L1D1
	Key-way, center tap	MHMF021L1V1
200 V	Round	MHMF022L1D1
	Key-way, center tap	MHMF022L1V1

● Dimensions are subject to change without notice. Contact us or a dealer for the latest information.

Key way dimensions
<Key way, center tap shaft>

[Unit: mm]

Connector type (IP67) · with brake · with protective lip/ with oil seal · Round shaft/ Key way, center tap shaft

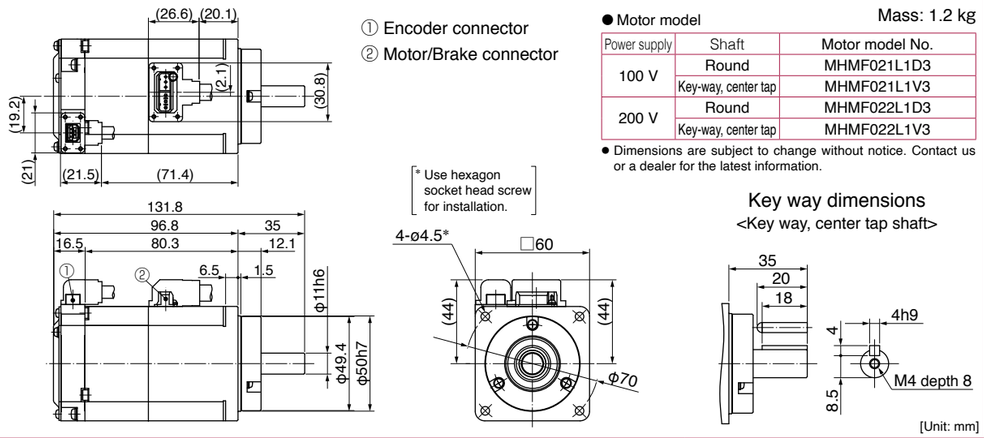

① Encoder connector
② Motor/Brake connector

● Motor model — Mass: 1.2 kg

Power supply	Shaft	Motor model No.
100 V	Round	MHMF021L1D3
	Key-way, center tap	MHMF021L1V3
200 V	Round	MHMF022L1D3
	Key-way, center tap	MHMF022L1V3

● Dimensions are subject to change without notice. Contact us or a dealer for the latest information.

Key way dimensions
<Key way, center tap shaft>

[Unit: mm]

* For motors specifications, refer to P.89, P.90.

MHMF 400 W

Leadwire type (IP65) · without brake · without oil seal · Round shaft/ Key way, center tap shaft

Mass: 1.1 kg

① Encoder connector
② Motor connector

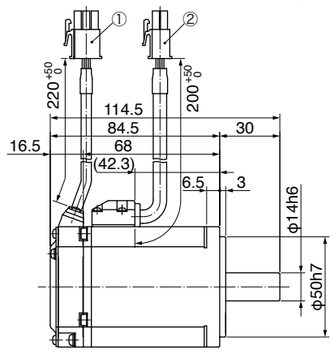

[* Use hexagon socket head screw for installation.]

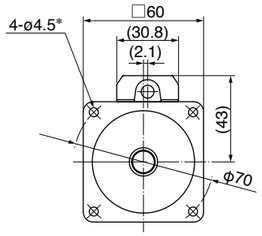

Key way dimensions
<Key way, center tap shaft>

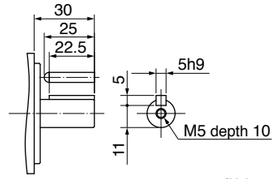

● Motor model

Power supply	Shaft	Motor model No.
100 V	Round	MHMF041L1A2
	Key-way, center tap	MHMF041L1S2
200 V	Round	MHMF042L1A2
	Key-way, center tap	MHMF042L1S2

● Dimensions are subject to change without notice. Contact us or a dealer for the latest information.

[Unit: mm]

Leadwire type (IP65) · without brake · with oil seal · Round shaft/ Key way, center tap shaft

Mass: 1.2 kg

① Encoder connector
② Motor connector

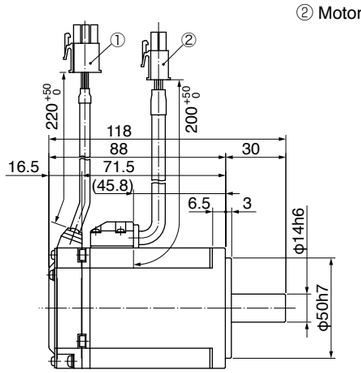

[* Use hexagon socket head screw for installation.]

Key way dimensions
<Key way, center tap shaft>

● Motor model

Power supply	Shaft	Motor model No.
100 V	Round	MHMF041L1C2
	Key-way, center tap	MHMF041L1U2
200 V	Round	MHMF042L1C2
	Key-way, center tap	MHMF042L1U2

● Dimensions are subject to change without notice. Contact us or a dealer for the latest information.

[Unit: mm]

Leadwire type (IP65) · without brake · with protective lip/ with oil seal · Round shaft/ Key way, center tap shaft

Mass: 1.2 kg

① Encoder connector
② Motor connector

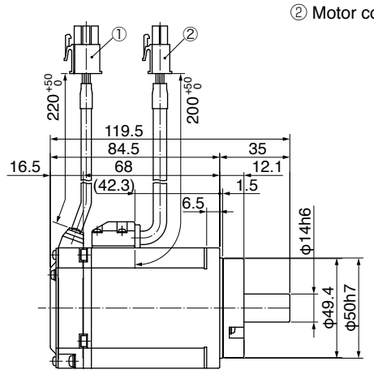

[* Use hexagon socket head screw for installation.]

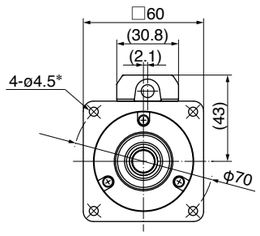

Key way dimensions
<Key way, center tap shaft>

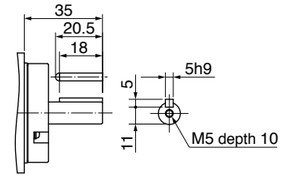

● Motor model

Power supply	Shaft	Motor model No.
100 V	Round	MHMF041L1C4
	Key-way, center tap	MHMF041L1U4
200 V	Round	MHMF042L1C4
	Key-way, center tap	MHMF042L1U4

● Dimensions are subject to change without notice. Contact us or a dealer for the latest information.

[Unit: mm]

* For motors specifications, refer to P.91, P.92.

MHMF 400 W

Leadwire type (IP65) · with brake · without oil seal · Round shaft/ Key way, center tap shaft

Mass: 1.5 kg

① Encoder connector
② Brake connector
③ Motor connector

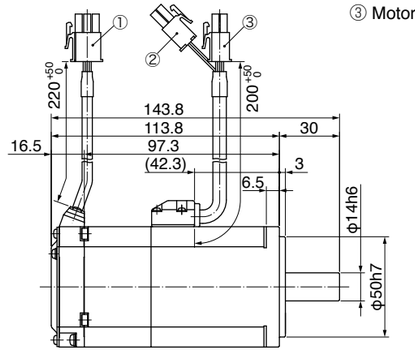

[* Use hexagon socket head screw for installation.]

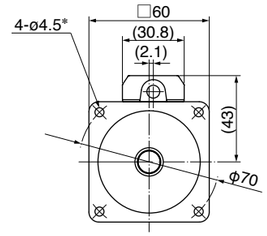

Key way dimensions
<Key way, center tap shaft>

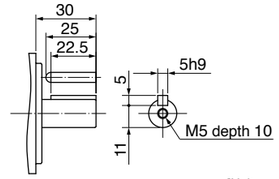

● Motor model

Power supply	Shaft	Motor model No.
100 V	Round	MHMF041L1B2
	Key-way, center tap	MHMF041L1T2
200 V	Round	MHMF042L1B2
	Key-way, center tap	MHMF042L1T2

● Dimensions are subject to change without notice. Contact us or a dealer for the latest information.

[Unit: mm]

Leadwire type (IP65) · with brake · with oil seal · Round shaft/ Key way, center tap shaft

Mass: 1.6 kg

① Encoder connector
② Brake connector
③ Motor connector

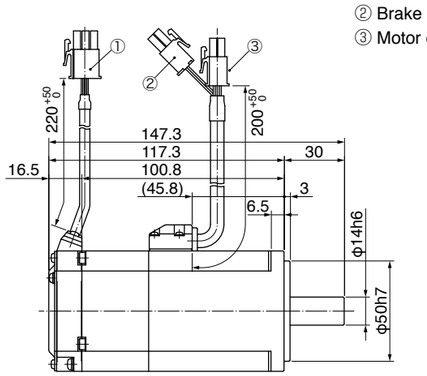

[* Use hexagon socket head screw for installation.]

Key way dimensions
<Key way, center tap shaft>

● Motor model

Power supply	Shaft	Motor model No.
100 V	Round	MHMF041L1D2
	Key-way, center tap	MHMF041L1V2
200 V	Round	MHMF042L1D2
	Key-way, center tap	MHMF042L1V2

● Dimensions are subject to change without notice. Contact us or a dealer for the latest information.

[Unit: mm]

Leadwire type (IP65) · with brake · with protective lip/ with oil seal · Round shaft/ Key way, center tap shaft

Mass: 1.6 kg

① Encoder connector
② Brake connector
③ Motor connector

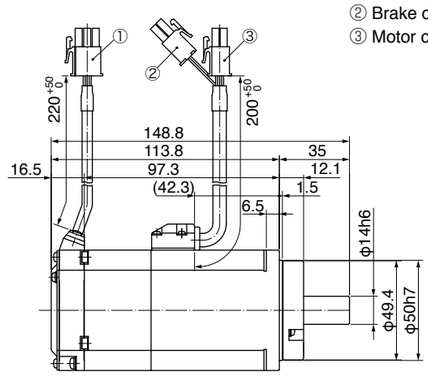

[* Use hexagon socket head screw for installation.]

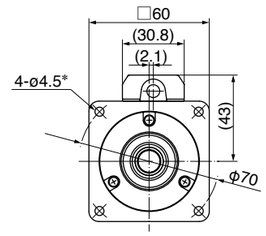

Key way dimensions
<Key way, center tap shaft>

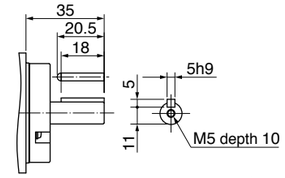

● Motor model

Power supply	Shaft	Motor model No.
100 V	Round	MHMF041L1D4
	Key-way, center tap	MHMF041L1V4
200 V	Round	MHMF042L1D4
	Key-way, center tap	MHMF042L1V4

● Dimensions are subject to change without notice. Contact us or a dealer for the latest information.

[Unit: mm]

* For motors specifications, refer to P.91, P.92.

MHMF 400 W

Connector type (IP67) · without brake · without oil seal · Round shaft/ Key way, center tap shaft

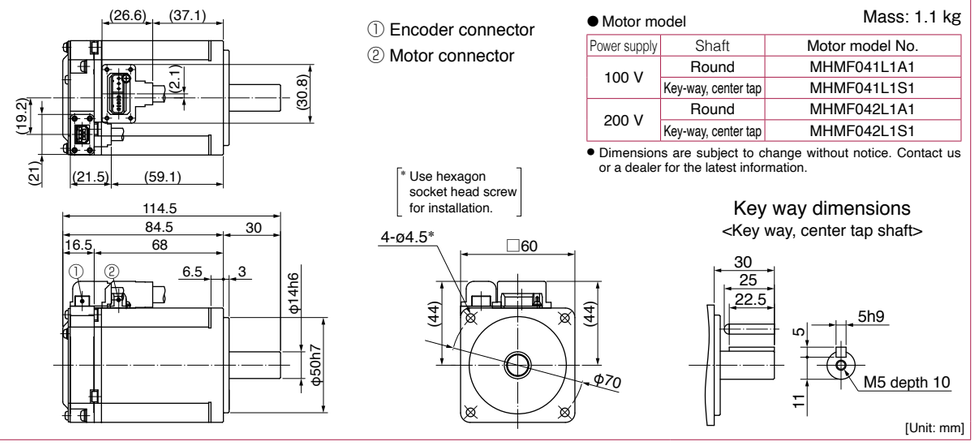

① Encoder connector
② Motor connector

● Motor model — Mass: 1.1 kg

Power supply	Shaft	Motor model No.
100 V	Round	MHMF041L1A1
	Key-way, center tap	MHMF041L1S1
200 V	Round	MHMF042L1A1
	Key-way, center tap	MHMF042L1S1

● Dimensions are subject to change without notice. Contact us or a dealer for the latest information.

[Unit: mm]

Connector type (IP67) · without brake · with oil seal · Round shaft/ Key way, center tap shaft

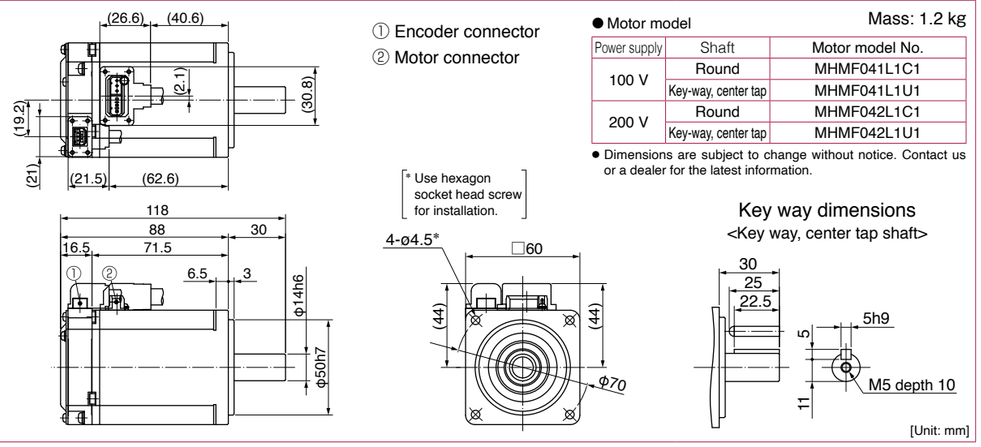

① Encoder connector
② Motor connector

● Motor model — Mass: 1.2 kg

Power supply	Shaft	Motor model No.
100 V	Round	MHMF041L1C1
	Key-way, center tap	MHMF041L1U1
200 V	Round	MHMF042L1C1
	Key-way, center tap	MHMF042L1U1

● Dimensions are subject to change without notice. Contact us or a dealer for the latest information.

[Unit: mm]

Connector type (IP67) · without brake · with protective lip/ with oil seal · Round shaft/ Key way, center tap shaft

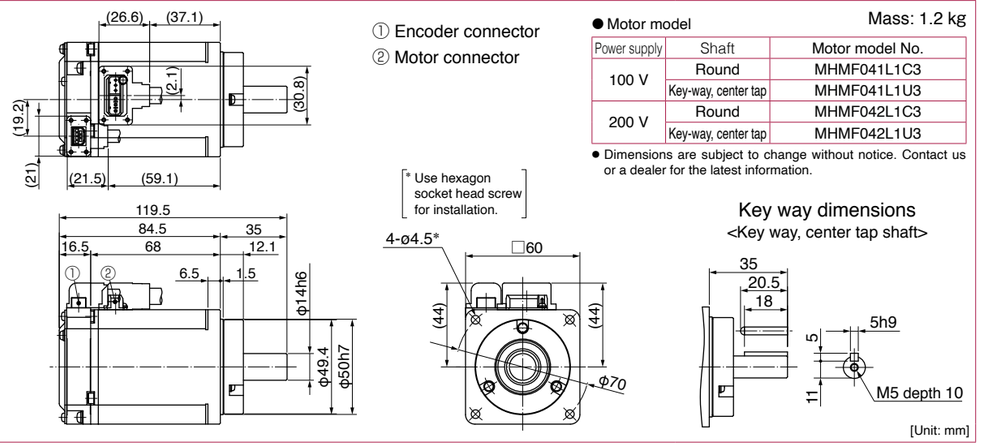

① Encoder connector
② Motor/Brake connector

● Motor model — Mass: 1.2 kg

Power supply	Shaft	Motor model No.
100 V	Round	MHMF041L1D1
	Key-way, center tap	MHMF041L1V1
200 V	Round	MHMF042L1D1
	Key-way, center tap	MHMF042L1V1

● Dimensions are subject to change without notice. Contact us or a dealer for the latest information.

[Unit: mm]

* For motors specifications, refer to P.91, P.92.

MHMF 400 W

Connector type (IP67) · with brake · without oil seal · Round shaft/ Key way, center tap shaft

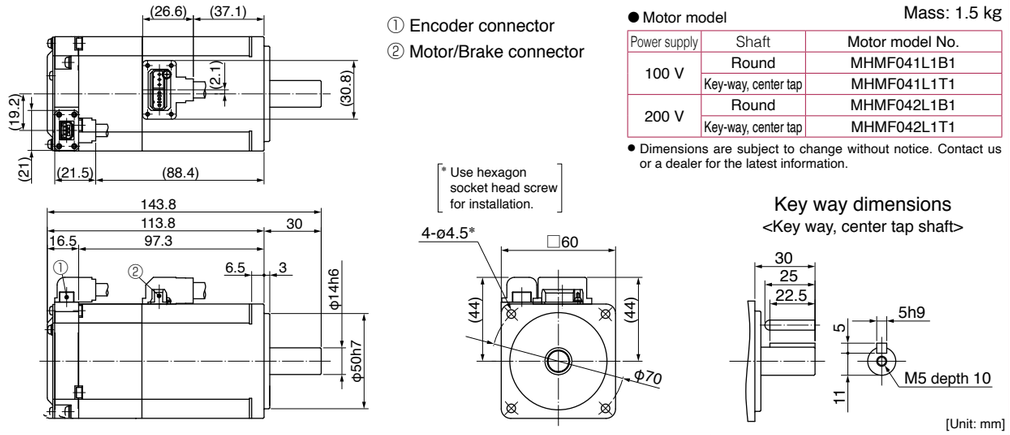

① Encoder connector
② Motor/Brake connector

● Motor model — Mass: 1.5 kg

Power supply	Shaft	Motor model No.
100 V	Round	MHMF041L1B1
	Key-way, center tap	MHMF041L1T1
200 V	Round	MHMF042L1B1
	Key-way, center tap	MHMF042L1T1

● Dimensions are subject to change without notice. Contact us or a dealer for the latest information.

[Unit: mm]

Connector type (IP67) · with brake · with oil seal · Round shaft/ Key way, center tap shaft

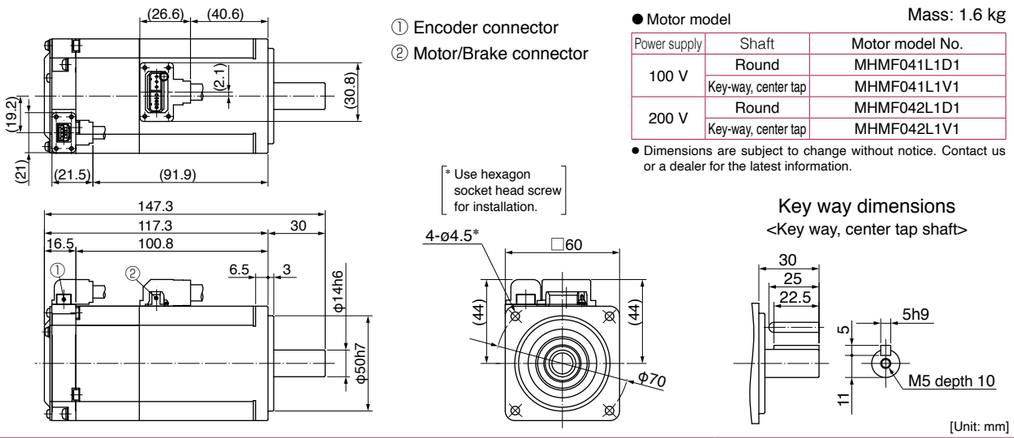

① Encoder connector
② Motor/Brake connector

● Motor model — Mass: 1.6 kg

Power supply	Shaft	Motor model No.
100 V	Round	MHMF041L1D3
	Key-way, center tap	MHMF041L1V3
200 V	Round	MHMF042L1D3
	Key-way, center tap	MHMF042L1V3

● Dimensions are subject to change without notice. Contact us or a dealer for the latest information.

[Unit: mm]

Connector type (IP67) · with brake · with protective lip/ with oil seal · Round shaft/ Key way, center tap shaft

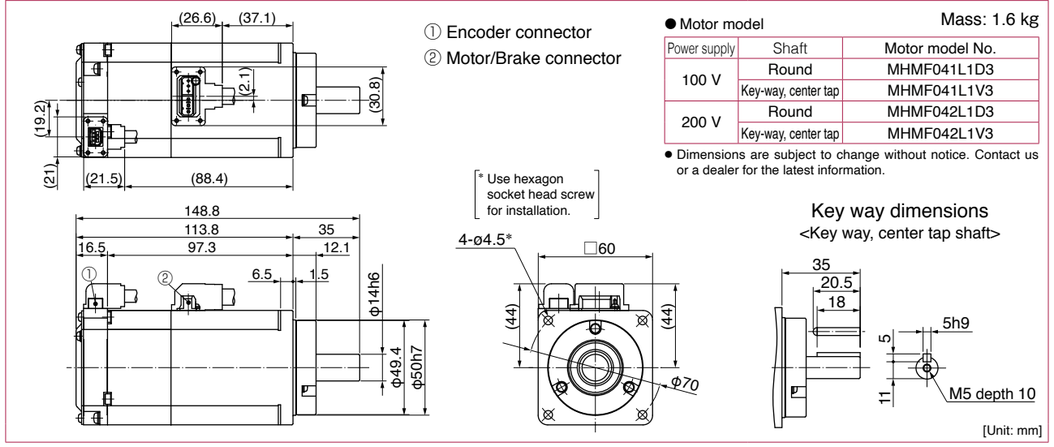

① Encoder connector
② Motor/Brake connector

● Motor model — Mass: 1.6 kg

Power supply	Shaft	Motor model No.
100 V	Round	MHMF041L1D3
	Key-way, center tap	MHMF041L1V3
200 V	Round	MHMF042L1D3
	Key-way, center tap	MHMF042L1V3

● Dimensions are subject to change without notice. Contact us or a dealer for the latest information.

[Unit: mm]

* For motors specifications, refer to P.91, P.92.

MHMF 750 W

Leadwire type (IP65) · without brake · without oil seal · Round shaft/ Key way, center tap shaft

Mass: 2.2 kg

① Encoder connector
② Motor connector

● Motor model

Power supply	Shaft	Motor model No.
200 V	Round	MHMF082L1A2
	Key-way, center tap	MHMF082L1S2

● Dimensions are subject to change without notice. Contact us or a dealer for the latest information.

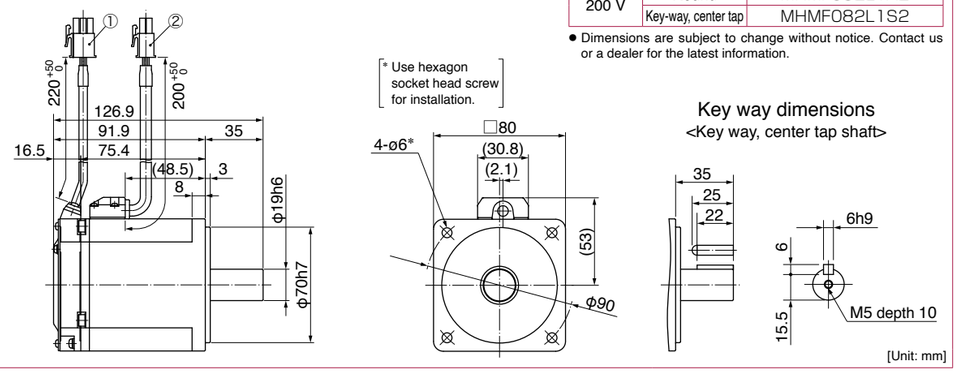

Key way dimensions
<Key way, center tap shaft>

[Unit: mm]

Leadwire type (IP65) · without brake · with oil seal · Round shaft/ Key way, center tap shaft

Mass: 2.3 kg

① Encoder connector
② Motor connector

● Motor model

Power supply	Shaft	Motor model No.
200 V	Round	MHMF082L1C2
	Key-way, center tap	MHMF082L1U2

● Dimensions are subject to change without notice. Contact us or a dealer for the latest information.

Key way dimensions
<Key way, center tap shaft>

[Unit: mm]

Leadwire type (IP65) · without brake · with protective lip/ with oil seal · Round shaft/ Key way, center tap shaft

Mass: 2.4 kg

① Encoder connector
② Motor connector

● Motor model

Power supply	Shaft	Motor model No.
200 V	Round	MHMF082L1C4
	Key-way, center tap	MHMF082L1U4

● Dimensions are subject to change without notice. Contact us or a dealer for the latest information.

Key way dimensions
<Key way, center tap shaft>

[Unit: mm]

* For motors specifications, refer to P.93.

MHMF 750 W

Leadwire type (IP65) · with brake · without oil seal · Round shaft/ Key way, center tap shaft

Mass: 2.9 kg

① Encoder connector
② Brake connector
③ Motor connector

● Motor model

Power supply	Shaft	Motor model No.
200 V	Round	MHMF082L1B2
	Key-way, center tap	MHMF082L1T2

● Dimensions are subject to change without notice. Contact us or a dealer for the latest information.

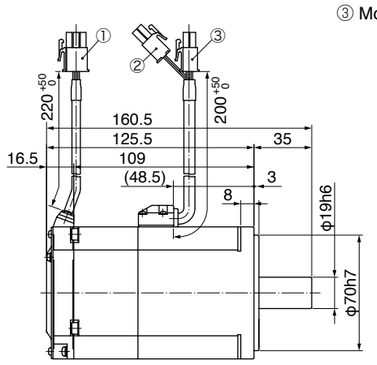

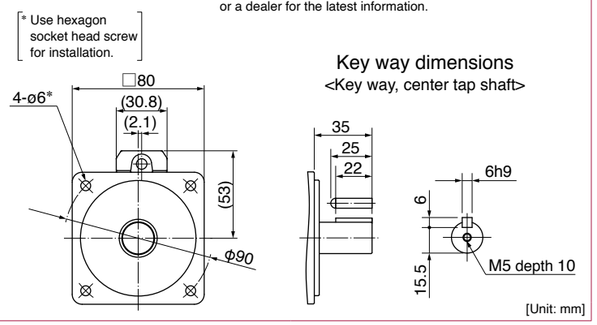

Key way dimensions
<Key way, center tap shaft>

[Unit: mm]

Leadwire type (IP65) · with brake · with oil seal · Round shaft/ Key way, center tap shaft

Mass: 3.0 kg

① Encoder connector
② Brake connector
③ Motor connector

● Motor model

Power supply	Shaft	Motor model No.
200 V	Round	MHMF082L1D2
	Key-way, center tap	MHMF082L1V2

● Dimensions are subject to change without notice. Contact us or a dealer for the latest information.

Key way dimensions
<Key way, center tap shaft>

[Unit: mm]

Leadwire type (IP65) · with brake · with protective lip/ with oil seal · Round shaft/ Key way, center tap shaft

Mass: 3.1 kg

① Encoder connector
② Brake connector
③ Motor connector

● Motor model

Power supply	Shaft	Motor model No.
200 V	Round	MHMF082L1D4
	Key-way, center tap	MHMF082L1V4

● Dimensions are subject to change without notice. Contact us or a dealer for the latest information.

Key way dimensions
<Key way, center tap shaft>

[Unit: mm]

* For motors specifications, refer to P.93.

MHMF 750 W

Connector type (IP67) · without brake · without oil seal · Round shaft/ Key way, center tap shaft

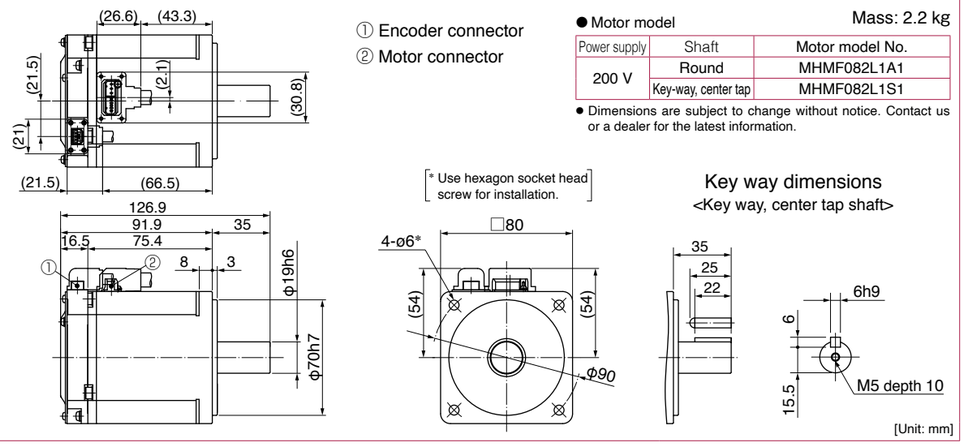

① Encoder connector
② Motor connector

Mass: 2.2 kg

● Motor model

Power supply	Shaft	Motor model No.
200 V	Round	MHMF082L1A1
	Key-way, center tap	MHMF082L1S1

● Dimensions are subject to change without notice. Contact us or a dealer for the latest information.

[* Use hexagon socket head screw for installation.]

Key way dimensions
<Key way, center tap shaft>

[Unit: mm]

Connector type (IP67) · without brake · with oil seal · Round shaft/ Key way, center tap shaft

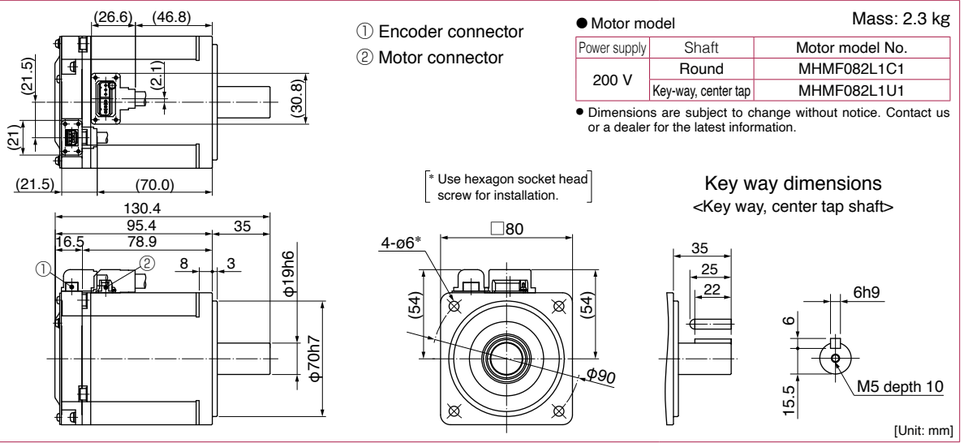

① Encoder connector
② Motor connector

Mass: 2.3 kg

● Motor model

Power supply	Shaft	Motor model No.
200 V	Round	MHMF082L1C1
	Key-way, center tap	MHMF082L1U1

● Dimensions are subject to change without notice. Contact us or a dealer for the latest information.

[* Use hexagon socket head screw for installation.]

Key way dimensions
<Key way, center tap shaft>

[Unit: mm]

Connector type (IP67) · without brake · with protective lip/ with oil seal · Round shaft/ Key way, center tap shaft

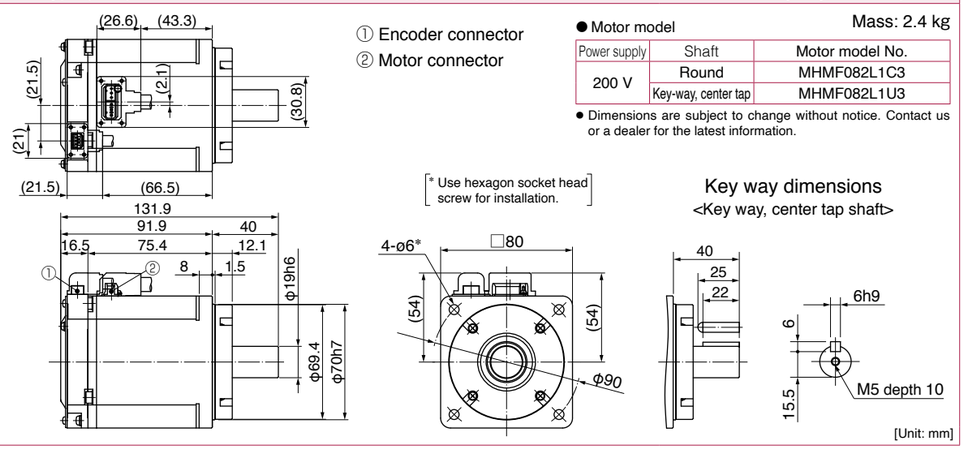

① Encoder connector
② Motor connector

Mass: 2.4 kg

● Motor model

Power supply	Shaft	Motor model No.
200 V	Round	MHMF082L1C3
	Key-way, center tap	MHMF082L1U3

● Dimensions are subject to change without notice. Contact us or a dealer for the latest information.

[* Use hexagon socket head screw for installation.]

Key way dimensions
<Key way, center tap shaft>

[Unit: mm]

* For motors specifications, refer to P.93.

MHMF 750 W

Connector type (IP67) · with brake · without oil seal · Round shaft/ Key way, center tap shaft

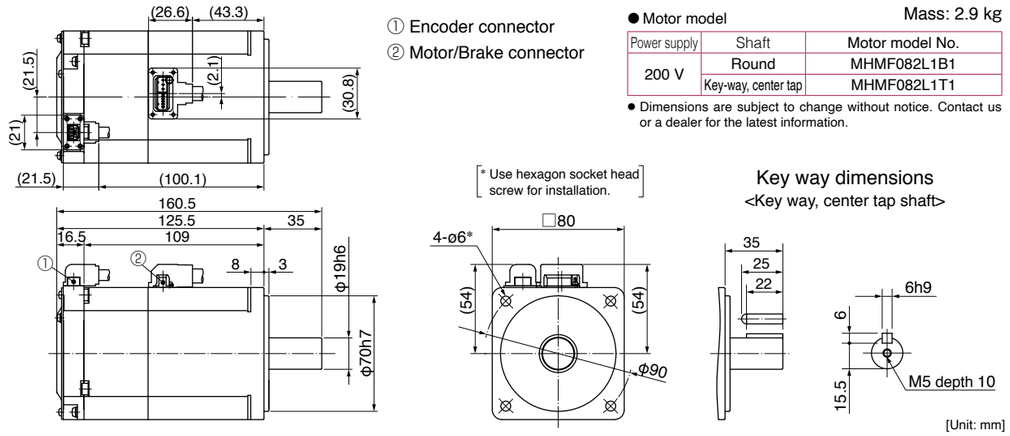

① Encoder connector
② Motor/Brake connector

Mass: 2.9 kg

● Motor model

Power supply	Shaft	Motor model No.
200 V	Round	MHMF082L1B1
	Key-way, center tap	MHMF082L1T1

● Dimensions are subject to change without notice. Contact us or a dealer for the latest information.

[* Use hexagon socket head screw for installation.]

Key way dimensions
<Key way, center tap shaft>

[Unit: mm]

Connector type (IP67) · with brake · with oil seal · Round shaft/ Key way, center tap shaft

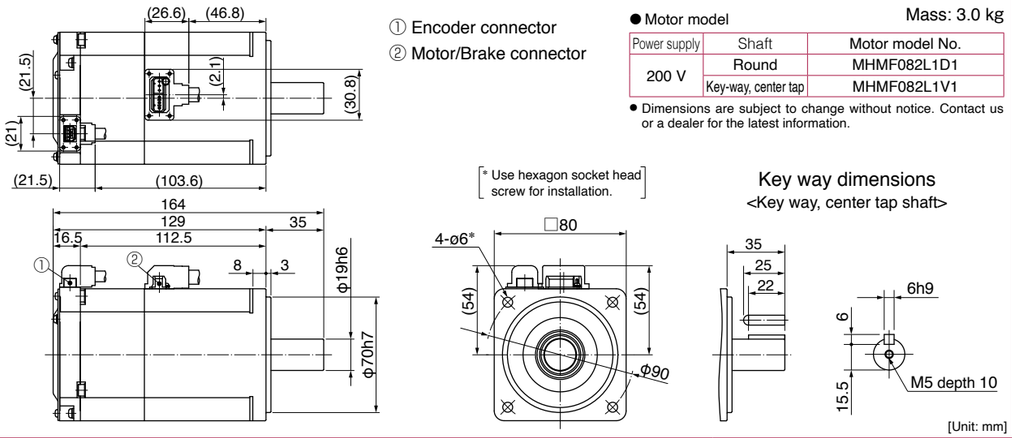

① Encoder connector
② Motor/Brake connector

Mass: 3.0 kg

● Motor model

Power supply	Shaft	Motor model No.
200 V	Round	MHMF082L1D1
	Key-way, center tap	MHMF082L1V1

● Dimensions are subject to change without notice. Contact us or a dealer for the latest information.

[* Use hexagon socket head screw for installation.]

Key way dimensions
<Key way, center tap shaft>

[Unit: mm]

Connector type (IP67) · with brake · with protective lip/ with oil seal · Round shaft/ Key way, center tap shaft

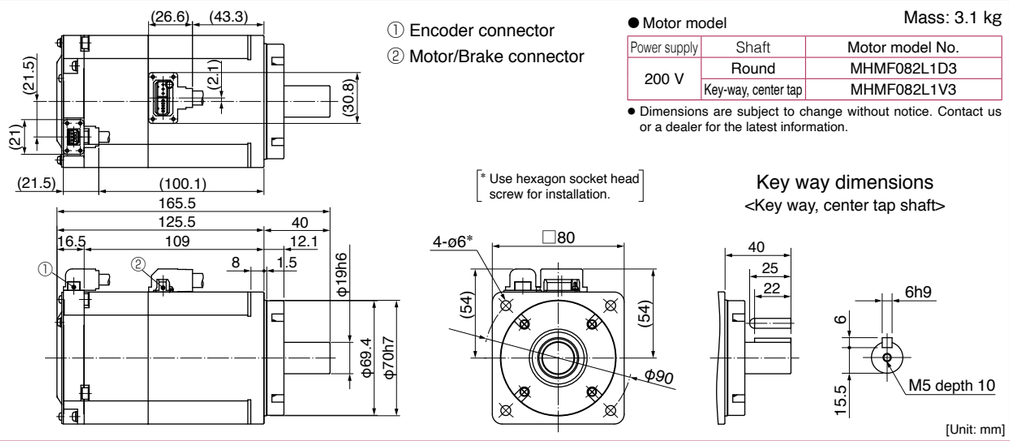

① Encoder connector
② Motor/Brake connector

Mass: 3.1 kg

● Motor model

Power supply	Shaft	Motor model No.
200 V	Round	MHMF082L1D3
	Key-way, center tap	MHMF082L1V3

● Dimensions are subject to change without notice. Contact us or a dealer for the latest information.

[* Use hexagon socket head screw for installation.]

Key way dimensions
<Key way, center tap shaft>

[Unit: mm]

* For motors specifications, refer to P.93.

MHMF 1000 W

Leadwire type (IP65) · without brake · without oil seal · Round shaft/ Key way, center tap shaft

Mass: 2.7 kg

① Encoder connector
② Motor connector

● Motor model

Power supply	Shaft	Motor model No.
200 V	Round	MHMF092L1A2
	Key-way, center tap	MHMF092L1S2

● Dimensions are subject to change without notice. Contact us or a dealer for the latest information.

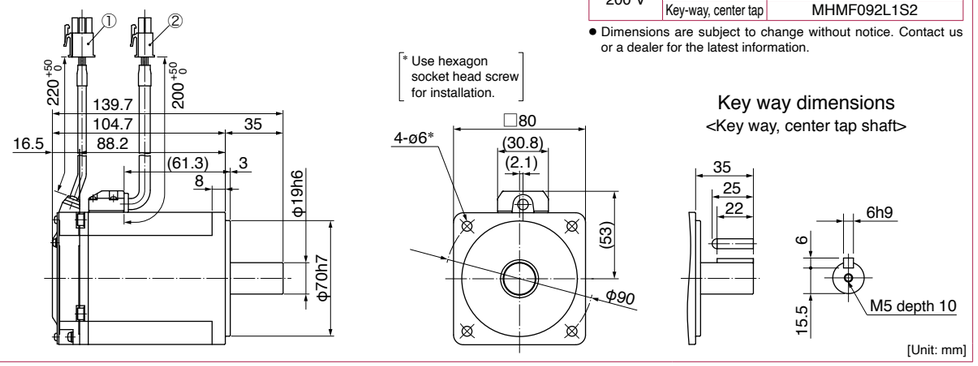

Key way dimensions
<Key way, center tap shaft>

[Unit: mm]

Leadwire type (IP65) · without brake · with oil seal · Round shaft/ Key way, center tap shaft

Mass: 2.8 kg

① Encoder connector
② Motor connector

● Motor model

Power supply	Shaft	Motor model No.
200 V	Round	MHMF092L1C2
	Key-way, center tap	MHMF092L1U2

● Dimensions are subject to change without notice. Contact us or a dealer for the latest information.

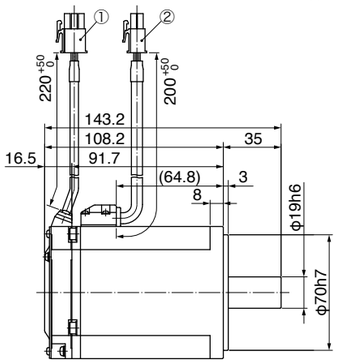

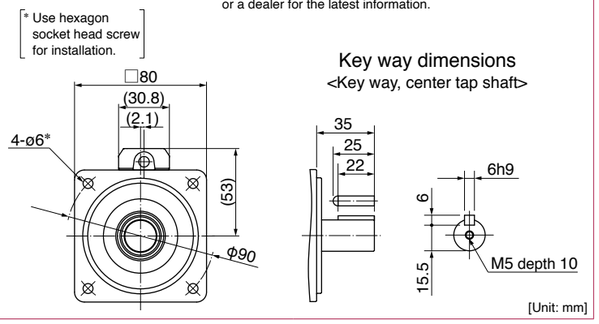

Key way dimensions
<Key way, center tap shaft>

[Unit: mm]

Leadwire type (IP65) · without brake · with protective lip/ with oil seal · Round shaft/ Key way, center tap shaft

Mass: 2.9 kg

① Encoder connector
② Motor connector

● Motor model

Power supply	Shaft	Motor model No.
200 V	Round	MHMF092L1C4
	Key-way, center tap	MHMF092L1U4

● Dimensions are subject to change without notice. Contact us or a dealer for the latest information.

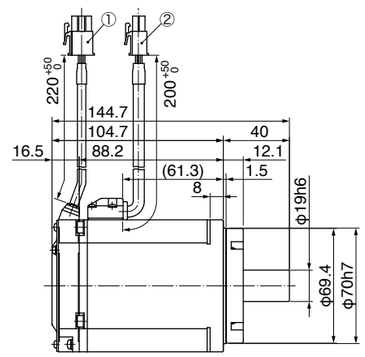

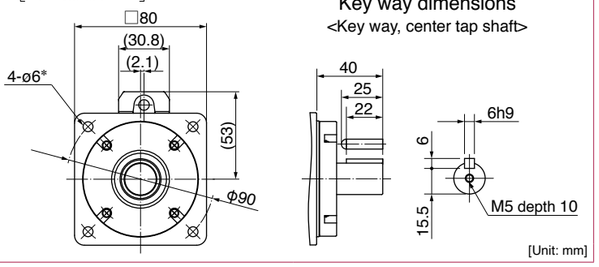

Key way dimensions
<Key way, center tap shaft>

[Unit: mm]

* For motors specifications, refer to P.94.

MHMF 1000 W

Leadwire type (IP65) · with brake · without oil seal · Round shaft/ Key way, center tap shaft

Mass: 3.4 kg

① Encoder connector
② Brake connector
③ Motor connector

● Motor model

Power supply	Shaft	Motor model No.
200 V	Round	MHMF092L1B2
	Key-way, center tap	MHMF092L1T2

● Dimensions are subject to change without notice. Contact us or a dealer for the latest information.

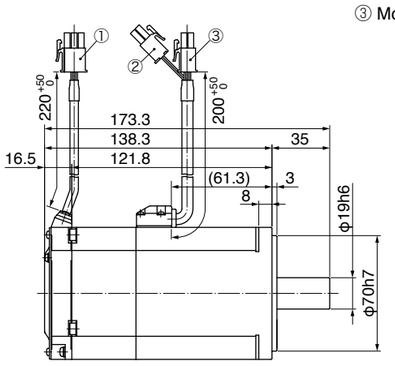

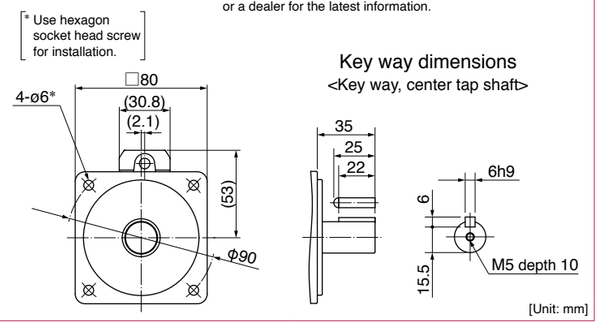

Key way dimensions
<Key way, center tap shaft>

[Unit: mm]

Leadwire type (IP65) · with brake · with oil seal · Round shaft/ Key way, center tap shaft

Mass: 3.5 kg

① Encoder connector
② Brake connector
③ Motor connector

● Motor model

Power supply	Shaft	Motor model No.
200 V	Round	MHMF092L1D2
	Key-way, center tap	MHMF092L1V2

● Dimensions are subject to change without notice. Contact us or a dealer for the latest information.

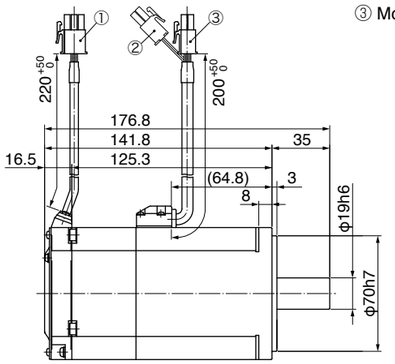

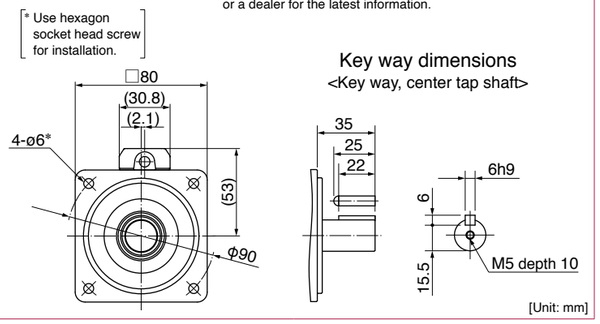

Key way dimensions
<Key way, center tap shaft>

[Unit: mm]

Leadwire type (IP65) · with brake · with protective lip/ with oil seal · Round shaft/ Key way, center tap shaft

Mass: 3.6 kg

① Encoder connector
② Brake connector
③ Motor connector

● Motor model

Power supply	Shaft	Motor model No.
200 V	Round	MHMF092L1D4
	Key-way, center tap	MHMF092L1V4

● Dimensions are subject to change without notice. Contact us or a dealer for the latest information.

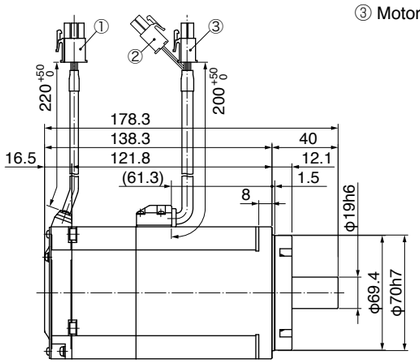

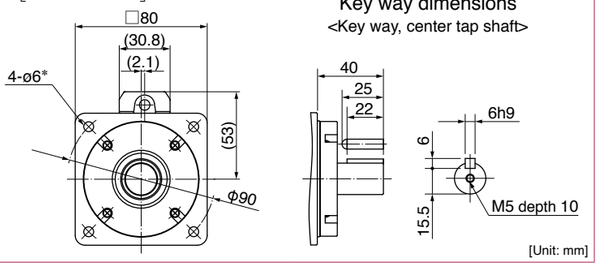

Key way dimensions
<Key way, center tap shaft>

[Unit: mm]

* For motors specifications, refer to P.94.

MHMF 1000 W

Connector type (IP67) · without brake · without oil seal · Round shaft/ Key way, center tap shaft

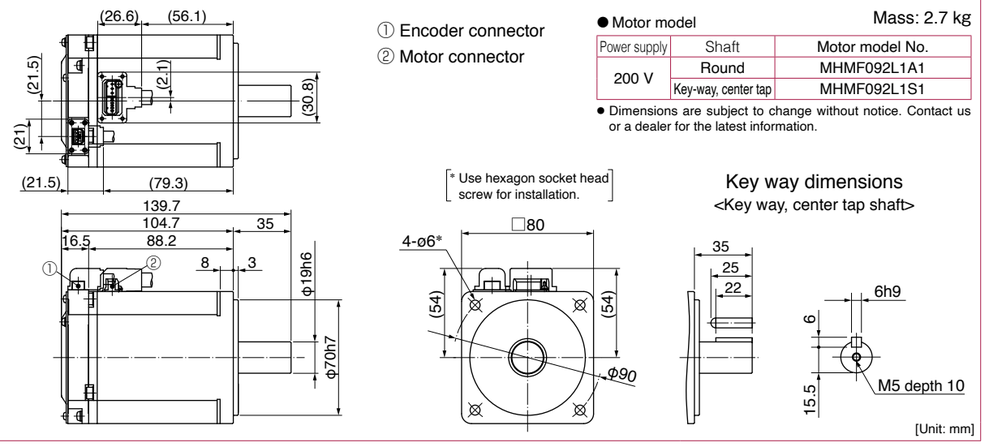

● Motor model — Mass: 2.7 kg

Power supply	Shaft	Motor model No.
200 V	Round	MHMF092L1A1
	Key-way, center tap	MHMF092L1S1

● Dimensions are subject to change without notice. Contact us or a dealer for the latest information.

[Unit: mm]

Connector type (IP67) · without brake · with oil seal · Round shaft/ Key way, center tap shaft

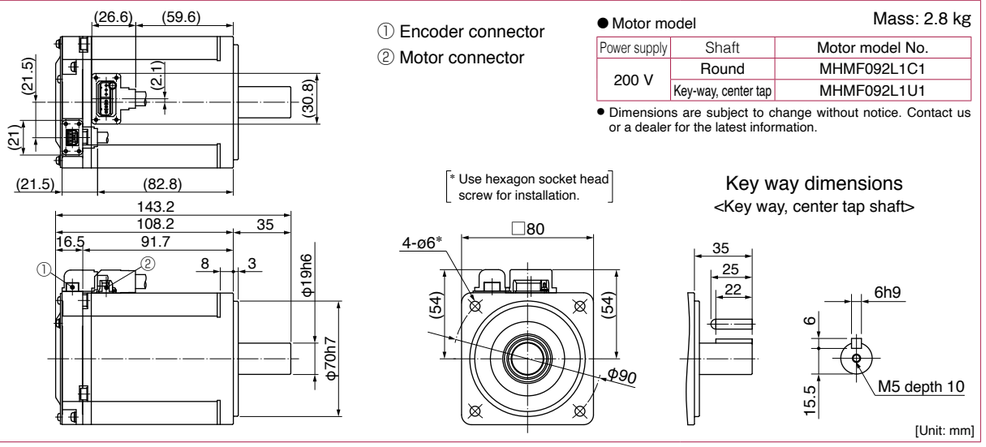

● Motor model — Mass: 2.8 kg

Power supply	Shaft	Motor model No.
200 V	Round	MHMF092L1C1
	Key-way, center tap	MHMF092L1U1

● Dimensions are subject to change without notice. Contact us or a dealer for the latest information.

[Unit: mm]

Connector type (IP67) · without brake · with protective lip/ with oil seal · Round shaft/ Key way, center tap shaft

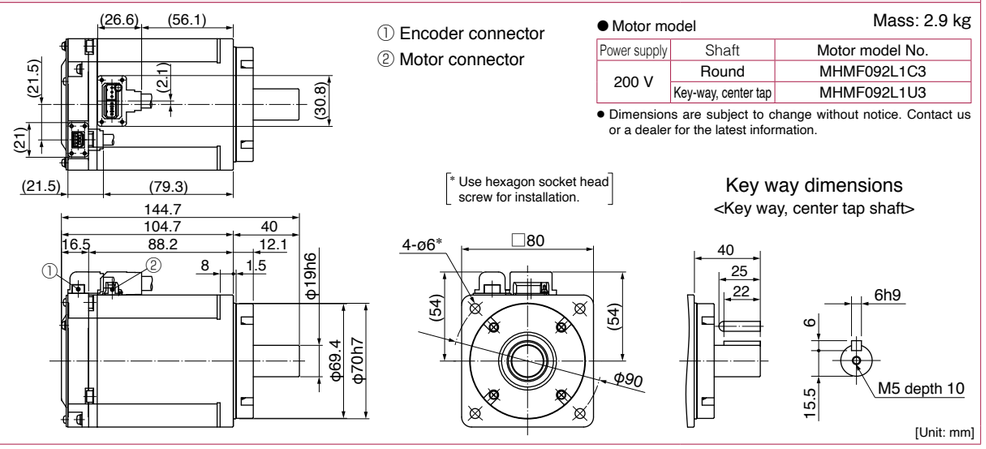

● Motor model — Mass: 2.9 kg

Power supply	Shaft	Motor model No.
200 V	Round	MHMF092L1C3
	Key-way, center tap	MHMF092L1U3

● Dimensions are subject to change without notice. Contact us or a dealer for the latest information.

[Unit: mm]

* For motors specifications, refer to P.94.

MHMF 1000 W

Connector type (IP67) · with brake · without oil seal · Round shaft/ Key way, center tap shaft

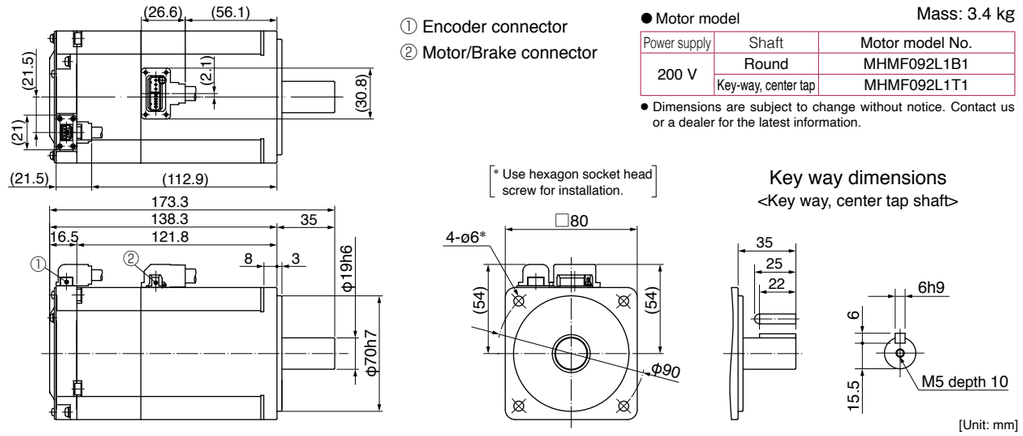

● Motor model — Mass: 3.4 kg

Power supply	Shaft	Motor model No.
200 V	Round	MHMF092L1B1
	Key-way, center tap	MHMF092L1T1

● Dimensions are subject to change without notice. Contact us or a dealer for the latest information.

[Unit: mm]

Connector type (IP67) · with brake · with oil seal · Round shaft/ Key way, center tap shaft

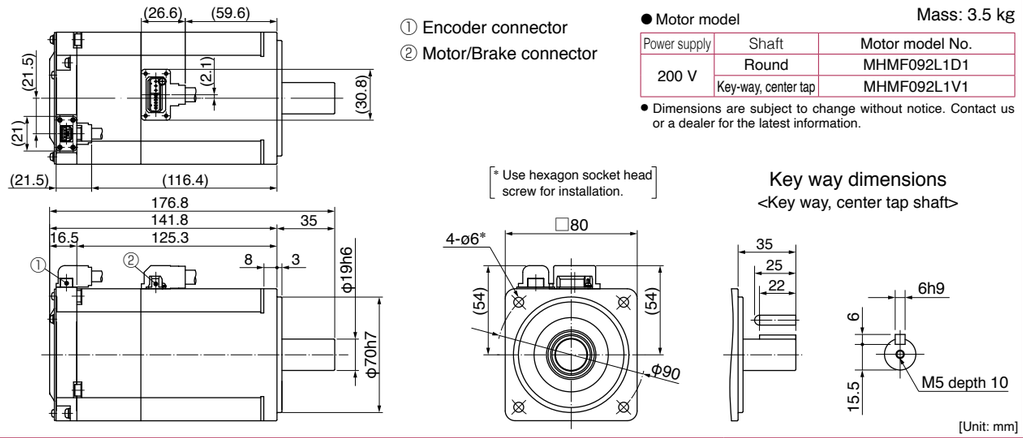

● Motor model — Mass: 3.5 kg

Power supply	Shaft	Motor model No.
200 V	Round	MHMF092L1D1
	Key-way, center tap	MHMF092L1V1

● Dimensions are subject to change without notice. Contact us or a dealer for the latest information.

[Unit: mm]

Connector type (IP67) · with brake · with protective lip/ with oil seal · Round shaft/ Key way, center tap shaft

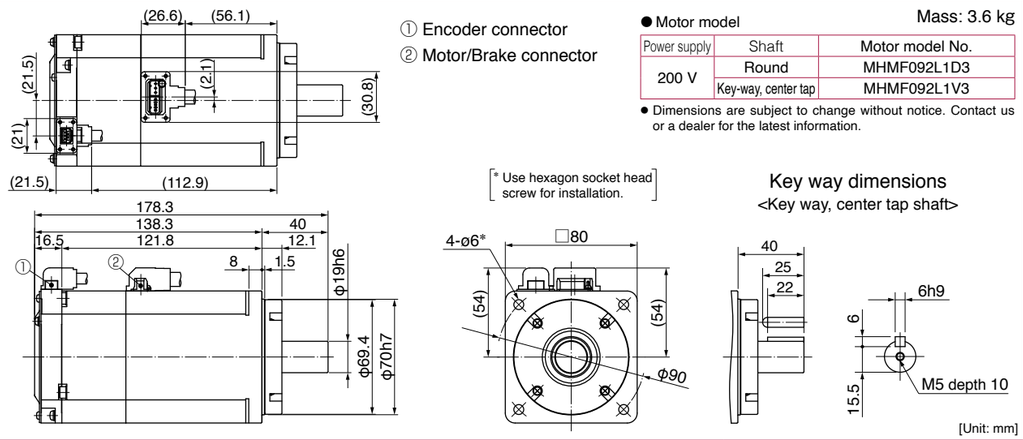

● Motor model — Mass: 3.6 kg

Power supply	Shaft	Motor model No.
200 V	Round	MHMF092L1D3
	Key-way, center tap	MHMF092L1V3

● Dimensions are subject to change without notice. Contact us or a dealer for the latest information.

[Unit: mm]

* For motors specifications, refer to P.94.

MHMF 1.0 kW

Large size connector (JL10) type ・ without brake ・ with oil seal/ with protective lip ・ Key way shaft/ Round shaft

① Encoder connector (Large size JL10)
② Motor connector

Mass: 6.1 kg

● Motor model

Power supply	Shaft	with oil seal	with protective lip
200 V	Round	MHMF102L1C6	MHMF102L1C8
	Key-way	MHMF102L1G6	MHMF102L1G8

● Dimensions are subject to change without notice. Contact us or a dealer for the latest information.

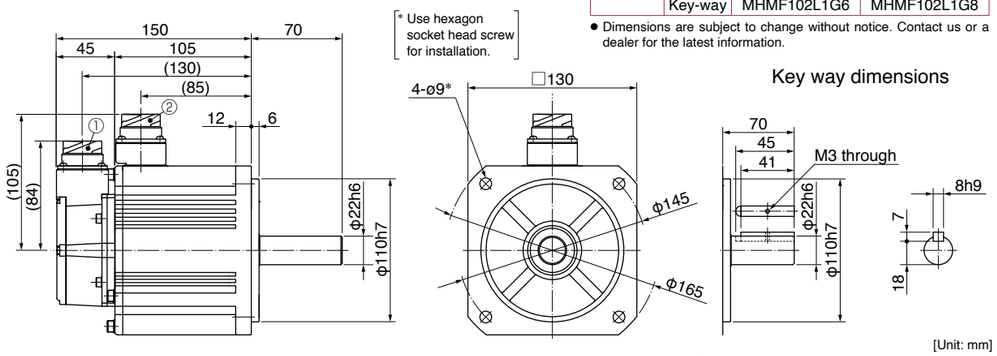

[Unit: mm]

Large size connector (JL10) type ・ with brake ・ with oil seal/ with protective lip ・ Key way shaft/ Round shaft

① Encoder connector (Large size JL10)
② Motor/Brake connector

Mass: 7.6 kg

● Motor model

Power supply	Shaft	with oil seal	with protective lip
200 V	Round	MHMF102L1D6	MHMF102L1D8
	Key-way	MHMF102L1H6	MHMF102L1H8

● Dimensions are subject to change without notice. Contact us or a dealer for the latest information.

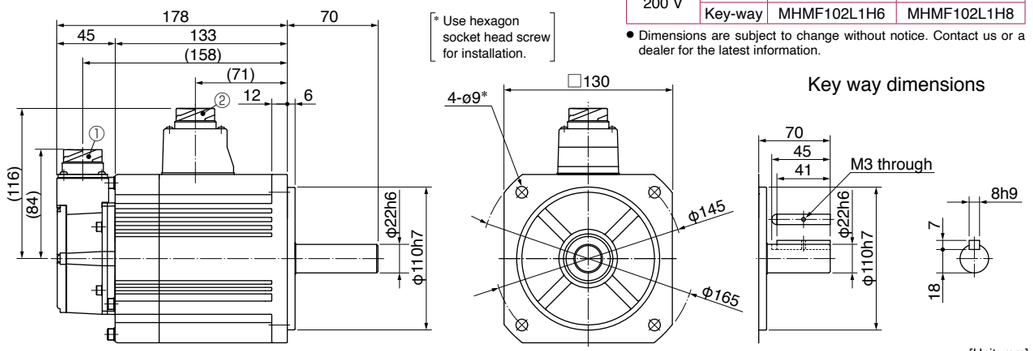

[Unit: mm]

Small size connector (JN2) type ・ without brake ・ with oil seal/ with protective lip ・ Key way shaft/ Round shaft

① Encoder connector (Small size JN2)
② Motor connector

Mass: 6.1 kg

● Motor model

Power supply	Shaft	with oil seal	with protective lip
200 V	Round	MHMF102L1C5	MHMF102L1C7
	Key-way	MHMF102L1G5	MHMF102L1G7

● Dimensions are subject to change without notice. Contact us or a dealer for the latest information.

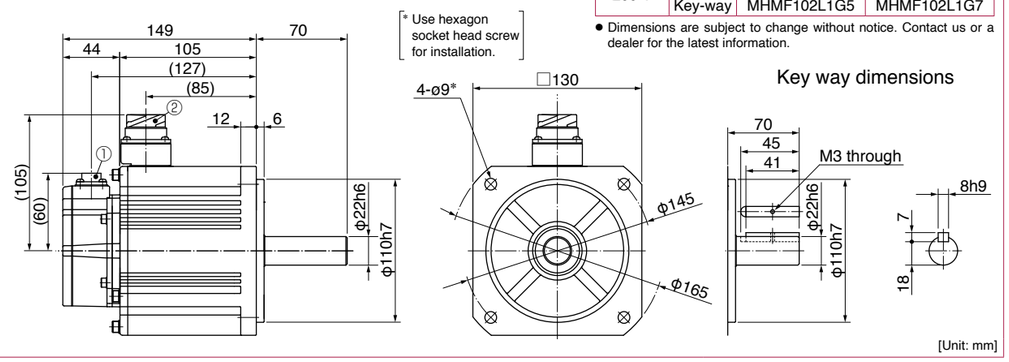

[Unit: mm]

* For motors specifications, refer to P.95.

MHMF 1.0 kW

Small size connector (JN2) type ・ with brake ・ with oil seal/ with protective lip ・ Key way shaft/ Round shaft

① Encoder connector (Small size JN2)
② Motor/Brake connector

Mass: 7.6 kg

● Motor model

Power supply	Shaft	with oil seal	with protective lip
200 V	Round	MHMF102L1D5	MHMF102L1D7
	Key-way	MHMF102L1H5	MHMF102L1H7

● Dimensions are subject to change without notice. Contact us or a dealer for the latest information.

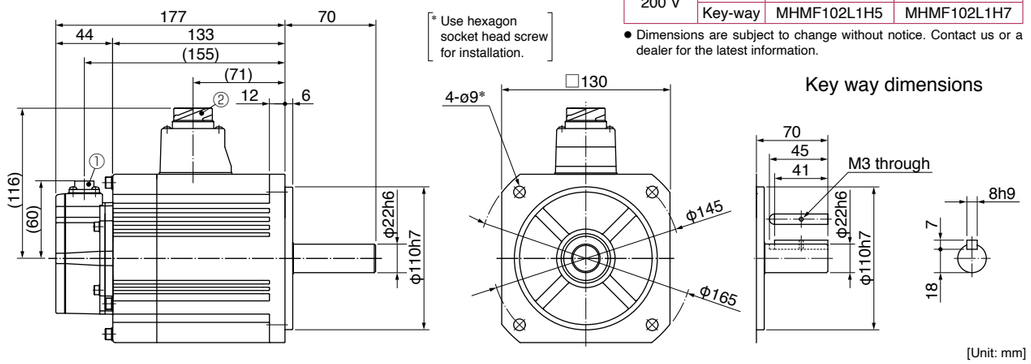

[Unit: mm]

MHMF 1.5 kW

Large size connector (JL10) type ・ without brake ・ with oil seal/ with protective lip ・ Key way shaft/ Round shaft

① Encoder connector (Large size JL10)
② Motor connector

Mass: 7.7 kg

● Motor model

Power supply	Shaft	with oil seal	with protective lip
200 V	Round	MHMF152L1C6	MHMF152L1C8
	Key-way	MHMF152L1G6	MHMF152L1G8

● Dimensions are subject to change without notice. Contact us or a dealer for the latest information.

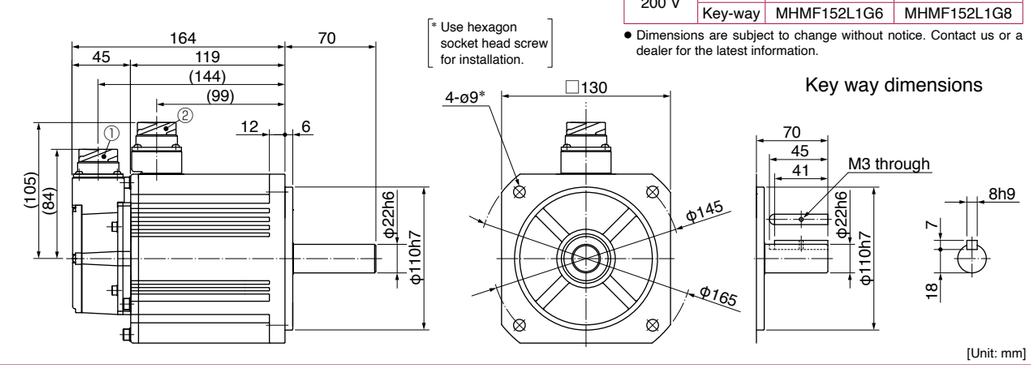

[Unit: mm]

Large size connector (JL10) type ・ with brake ・ with oil seal/ with protective lip ・ Key way shaft/ Round shaft

① Encoder connector (Large size JL10)
② Motor/Brake connector

Mass: 9.2 kg

● Motor model

Power supply	Shaft	with oil seal	with protective lip
200 V	Round	MHMF152L1D6	MHMF152L1D8
	Key-way	MHMF152L1H6	MHMF152L1H8

● Dimensions are subject to change without notice. Contact us or a dealer for the latest information.

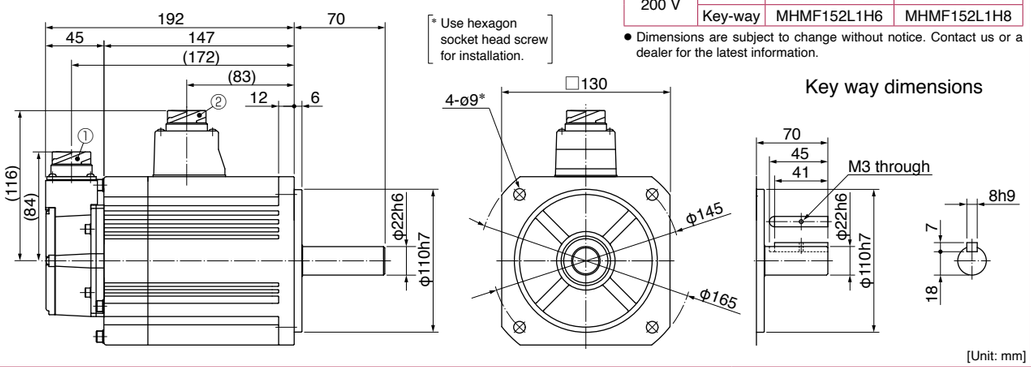

[Unit: mm]

* For motors specifications, refer to P.95, P.96.

MHMF 1.5 kW

Small size connector (JN2) type · without brake · with oil seal/ with protective lip · Key way shaft/ Round shaft

① Encoder connector (Small size JN2)
② Motor connector

Mass: 7.7 kg

● Motor model

Power supply	Shaft	with oil seal	with protective lip
200 V	Round	MHMF152L1C5	MHMF152L1C7
	Key-way	MHMF152L1G5	MHMF152L1G7

● Dimensions are subject to change without notice. Contact us or a dealer for the latest information.

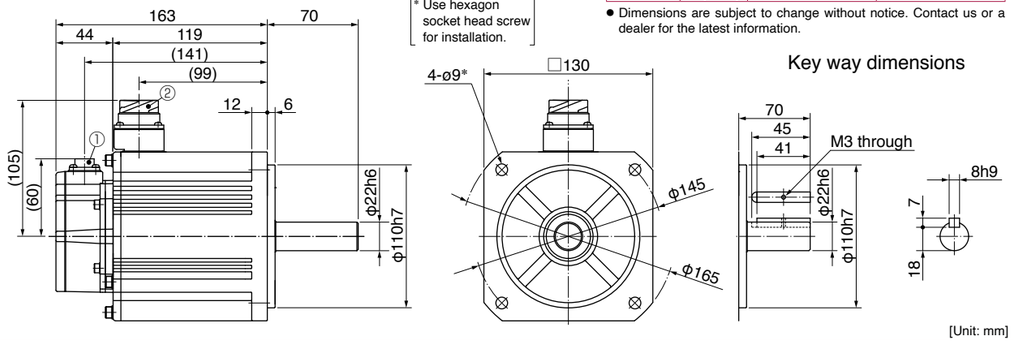

[Unit: mm]

Small size connector (JN2) type · with brake · with oil seal/ with protective lip · Key way shaft/ Round shaft

① Encoder connector (Small size JN2)
② Motor/Brake connector

Mass: 9.2 kg

● Motor model

Power supply	Shaft	with oil seal	with protective lip
200 V	Round	MHMF152L1D5	MHMF152L1D7
	Key-way	MHMF152L1H5	MHMF152L1H7

● Dimensions are subject to change without notice. Contact us or a dealer for the latest information.

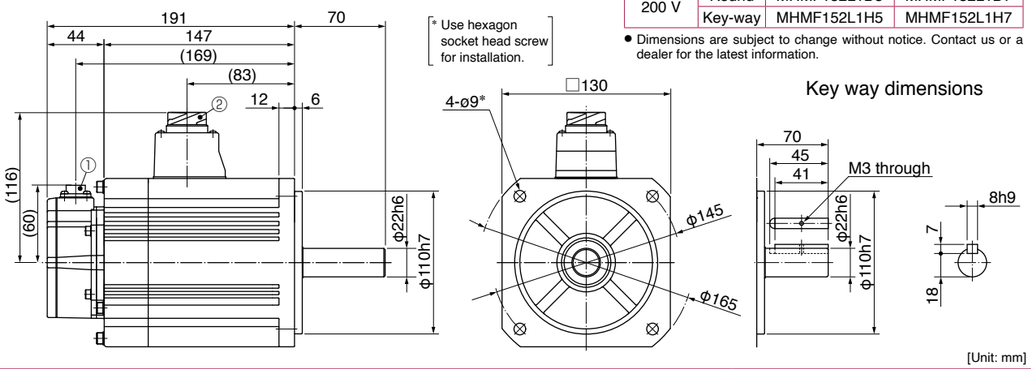

[Unit: mm]

MHMF 2.0 kW

Large size connector (JL10) type · without brake · with oil seal/ with protective lip · Key way shaft/ Round shaft

① Encoder connector (Large size JL10)
② Motor connector

Mass: 11.3 kg

● Motor model

Power supply	Shaft	with oil seal	with protective lip
200 V	Round	MHMF202L1C6	MHMF202L1C8
	Key-way	MHMF202L1G6	MHMF202L1G8

● Dimensions are subject to change without notice. Contact us or a dealer for the latest information.

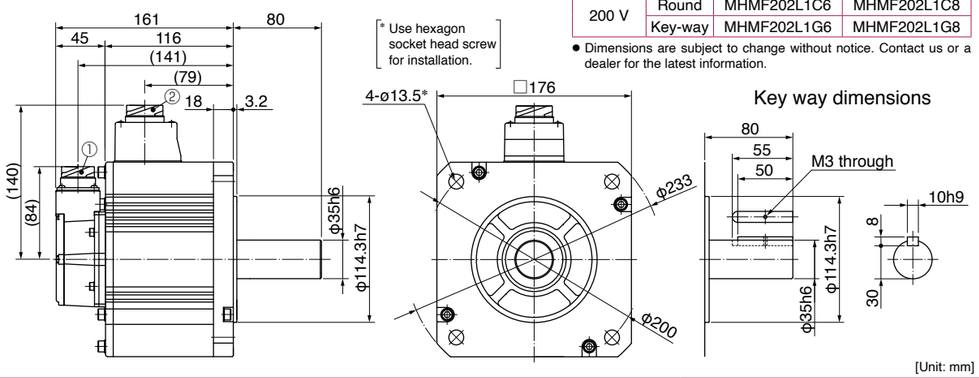

[Unit: mm]

* For motors specifications, refer to P.96, P.97.

MHMF 2.0 kW

Large size connector (JL10) type · with brake · with oil seal/ with protective lip · Key way shaft/ Round shaft

① Encoder connector (Large size JL10)
② Motor/Brake connector

Mass: 14.6 kg

● Motor model

Power supply	Shaft	with oil seal	with protective lip
200 V	Round	MHMF202L1D6	MHMF202L1D8
	Key-way	MHMF202L1H6	MHMF202L1H8

● Dimensions are subject to change without notice. Contact us or a dealer for the latest information.

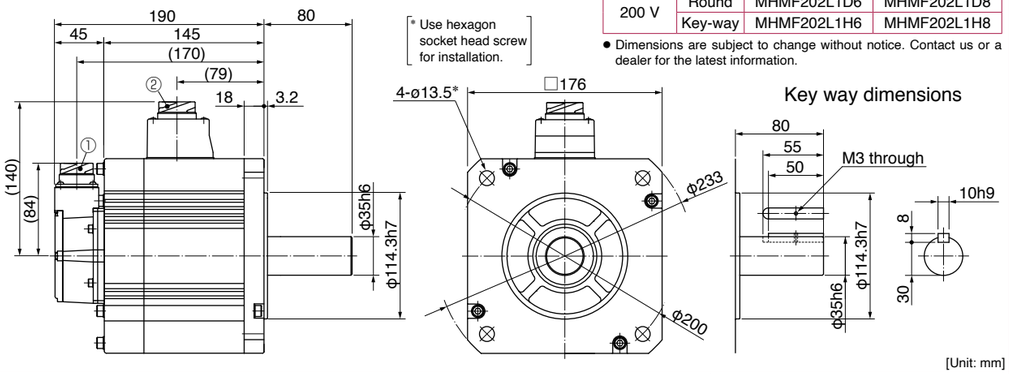

[Unit: mm]

Small size connector (JN2) type · without brake · with oil seal/ with protective lip · Key way shaft/ Round shaft

① Encoder connector (Small size JN2)
② Motor connector

Mass: 11.3 kg

● Motor model

Power supply	Shaft	with oil seal	with protective lip
200 V	Round	MHMF202L1C5	MHMF202L1C7
	Key-way	MHMF202L1G5	MHMF202L1G7

● Dimensions are subject to change without notice. Contact us or a dealer for the latest information.

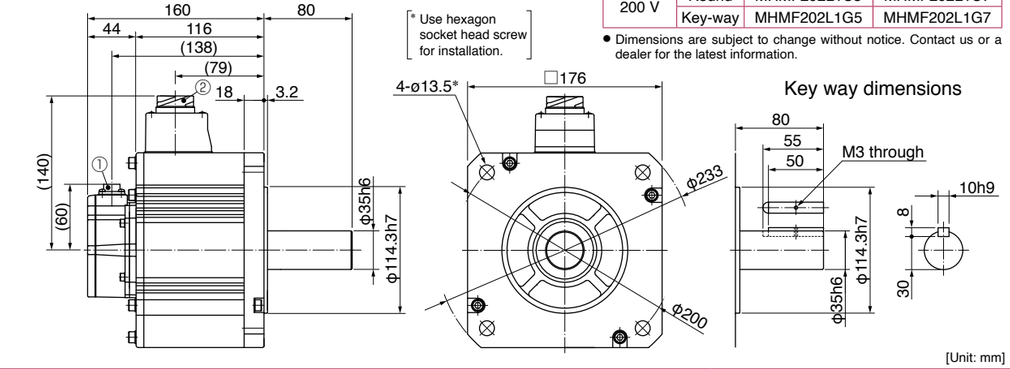

[Unit: mm]

Small size connector (JN2) type · with brake · with oil seal/ with protective lip · Key way shaft/ Round shaft

① Encoder connector (Small size JN2)
② Motor/Brake connector

Mass: 14.6 kg

● Motor model

Power supply	Shaft	with oil seal	with protective lip
200 V	Round	MHMF202L1D5	MHMF202L1D7
	Key-way	MHMF202L1H5	MHMF202L1H7

● Dimensions are subject to change without notice. Contact us or a dealer for the latest information.

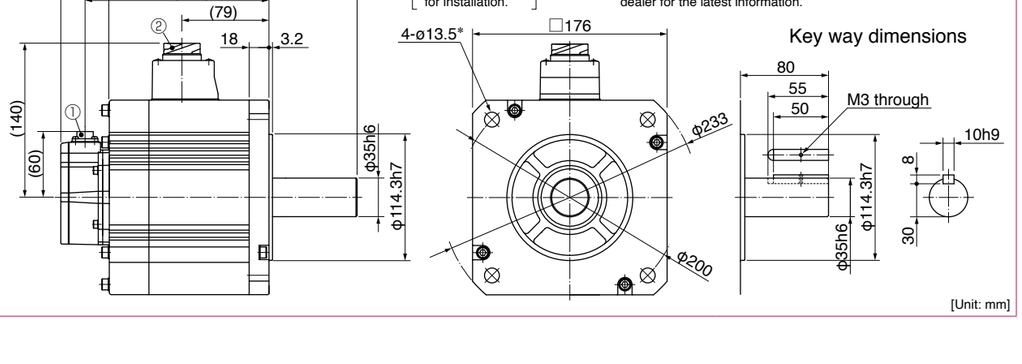

[Unit: mm]

* For motors specifications, refer to P.97.

MHMF 3.0 kW

Large size connector (JL10) type ・ without brake ・ with oil seal/ with protective lip ・ Key way shaft/ Round shaft

① Encoder connector (Large size JL10)
② Motor connector

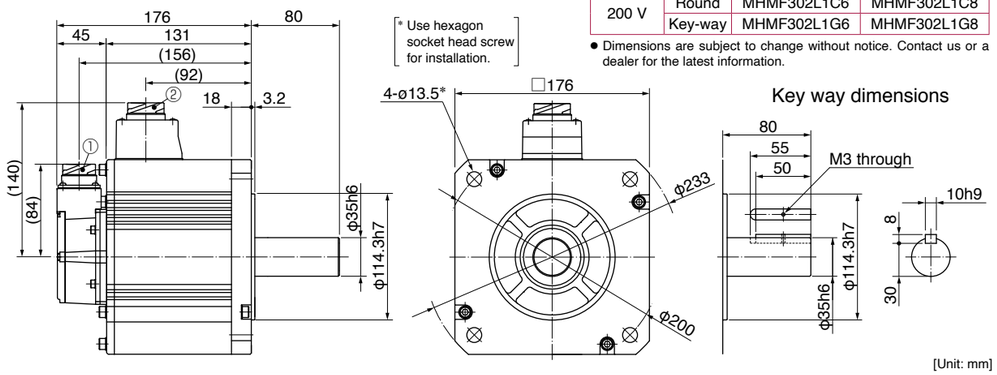

● Motor model

Mass: 13.8 kg

Power supply	Shaft	with oil seal	with protective lip
200 V	Round	MHMF302L1C6	MHMF302L1C8
	Key-way	MHMF302L1G6	MHMF302L1G8

● Dimensions are subject to change without notice. Contact us or a dealer for the latest information.

[Unit: mm]

Large size connector (JL10) type ・ with brake ・ with oil seal/ with protective lip ・ Key way shaft/ Round shaft

① Encoder connector (Large size JL10)
② Motor/Brake connector

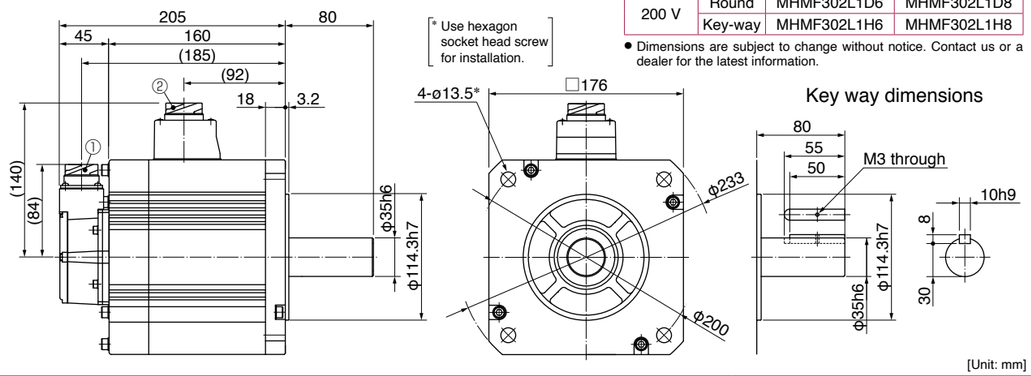

● Motor model

Mass: 17.2 kg

Power supply	Shaft	with oil seal	with protective lip
200 V	Round	MHMF302L1D6	MHMF302L1D8
	Key-way	MHMF302L1H6	MHMF302L1H8

● Dimensions are subject to change without notice. Contact us or a dealer for the latest information.

[Unit: mm]

Small size connector (JN2) type ・ without brake ・ with oil seal/ with protective lip ・ Key way shaft/ Round shaft

① Encoder connector (Small size JN2)
② Motor connector

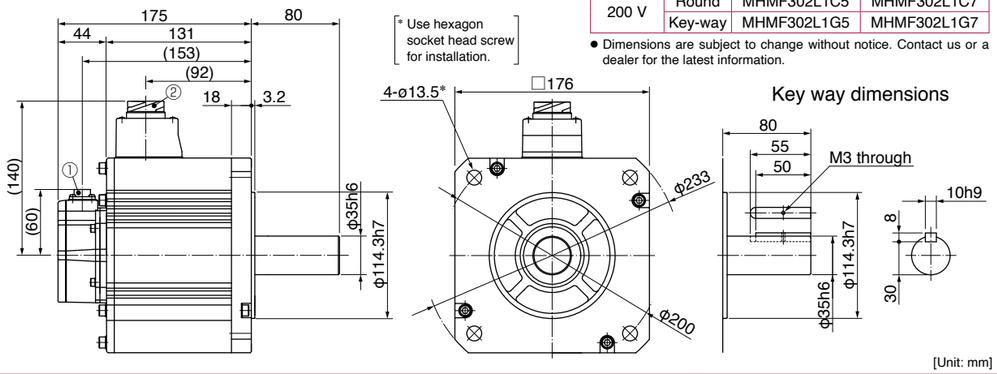

● Motor model

Mass: 13.8 kg

Power supply	Shaft	with oil seal	with protective lip
200 V	Round	MHMF302L1C5	MHMF302L1C7
	Key-way	MHMF302L1G5	MHMF302L1G7

● Dimensions are subject to change without notice. Contact us or a dealer for the latest information.

[Unit: mm]

* For motors specifications, refer to P.98.

MHMF 3.0 kW

Small size connector (JN2) type ・ with brake ・ with oil seal/ with protective lip ・ Key way shaft/ Round shaft

① Encoder connector (Small size JN2)
② Motor/Brake connector

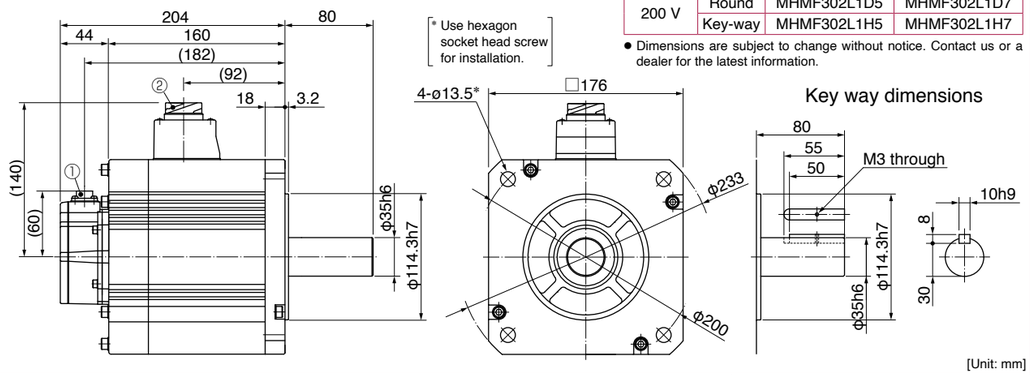

● Motor model

Mass: 17.2 kg

Power supply	Shaft	with oil seal	with protective lip
200 V	Round	MHMF302L1D5	MHMF302L1D7
	Key-way	MHMF302L1H5	MHMF302L1H7

● Dimensions are subject to change without notice. Contact us or a dealer for the latest information.

[Unit: mm]

MHMF 4.0 kW

Large size connector (JL10) type ・ without brake ・ with oil seal/ with protective lip ・ Key way shaft/ Round shaft

① Encoder connector (Large size JL10)
② Motor connector

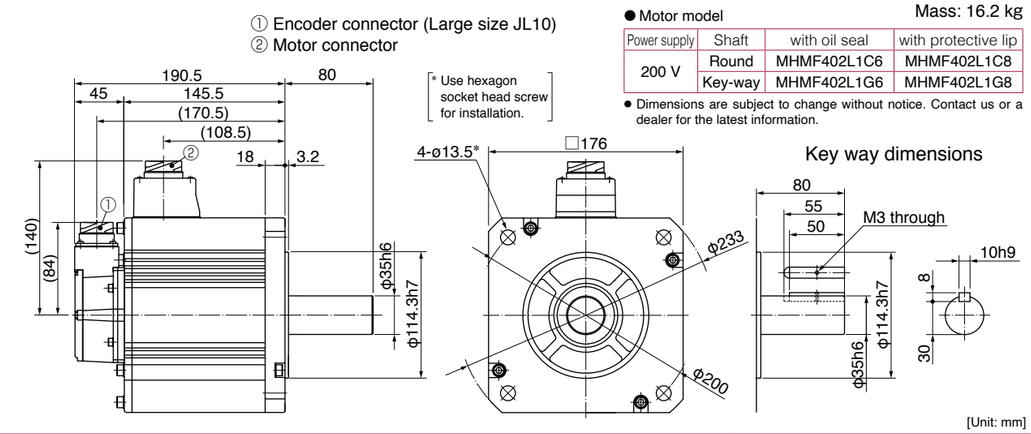

● Motor model

Mass: 16.2 kg

Power supply	Shaft	with oil seal	with protective lip
200 V	Round	MHMF402L1C6	MHMF402L1C8
	Key-way	MHMF402L1G6	MHMF402L1G8

● Dimensions are subject to change without notice. Contact us or a dealer for the latest information.

[Unit: mm]

Large size connector (JL10) type ・ with brake ・ with oil seal/ with protective lip ・ Key way shaft/ Round shaft

① Encoder connector (Large size JL10)
② Motor/Brake connector

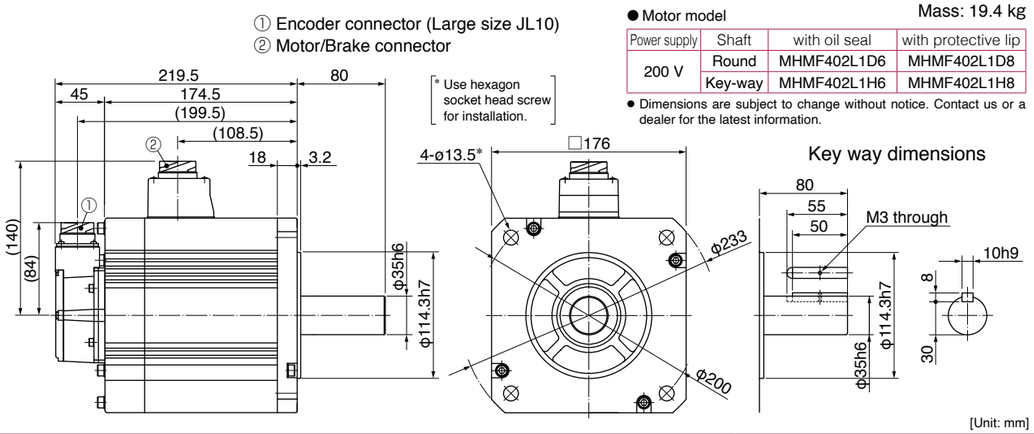

● Motor model

Mass: 19.4 kg

Power supply	Shaft	with oil seal	with protective lip
200 V	Round	MHMF402L1D6	MHMF402L1D8
	Key-way	MHMF402L1H6	MHMF402L1H8

● Dimensions are subject to change without notice. Contact us or a dealer for the latest information.

[Unit: mm]

* For motors specifications, refer to P.98, P.99.

MHMF 4.0 kW

Small size connector (JN2) type ・ without brake ・ with oil seal/ with protective lip ・ Key way shaft/ Round shaft

① Encoder connector (Small size JN2)
② Motor connector

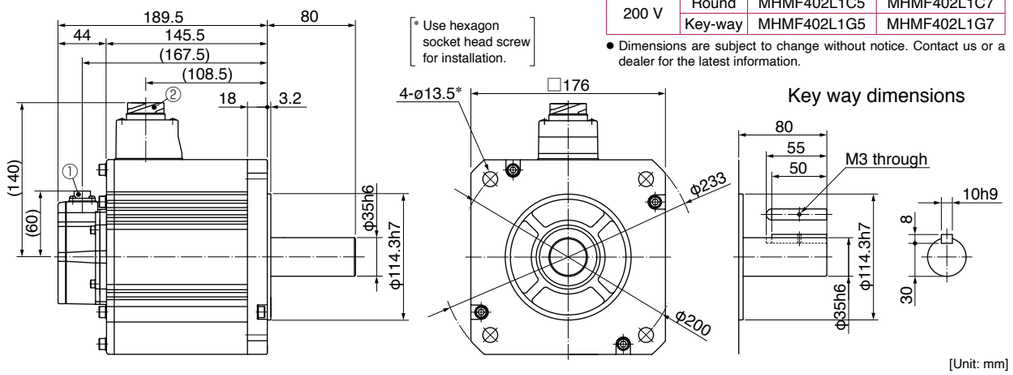

● Motor model

Mass: 16.2 kg

Power supply	Shaft	with oil seal	with protective lip
200 V	Round	MHMF402L1C5	MHMF402L1C7
	Key-way	MHMF402L1G5	MHMF402L1G7

● Dimensions are subject to change without notice. Contact us or a dealer for the latest information.

[Unit: mm]

Small size connector (JN2) type ・ with brake ・ with oil seal/ with protective lip ・ Key way shaft/ Round shaft

① Encoder connector (Small size JN2)
② Motor/Brake connector

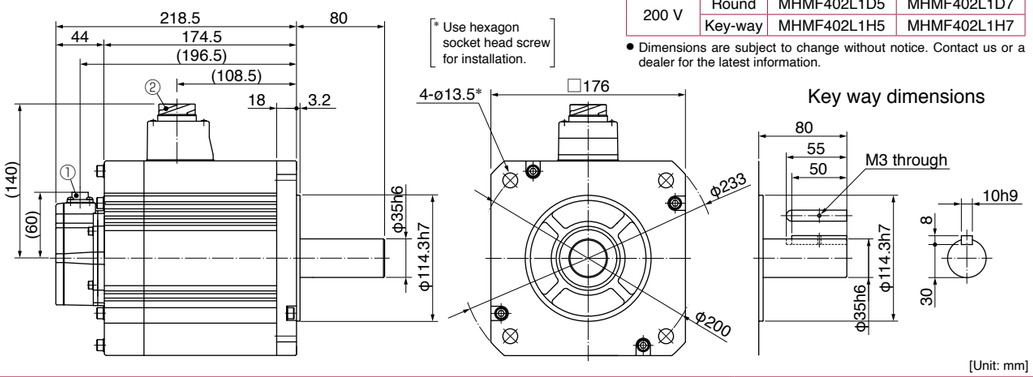

● Motor model

Mass: 19.4 kg

Power supply	Shaft	with oil seal	with protective lip
200 V	Round	MHMF402L1D5	MHMF402L1D7
	Key-way	MHMF402L1H5	MHMF402L1H7

● Dimensions are subject to change without notice. Contact us or a dealer for the latest information.

[Unit: mm]

MHMF 5.0 kW

Large size connector (JL10) type ・ without brake ・ with oil seal/ with protective lip ・ Key way shaft/ Round shaft

① Encoder connector (Large size JL10)
② Motor connector

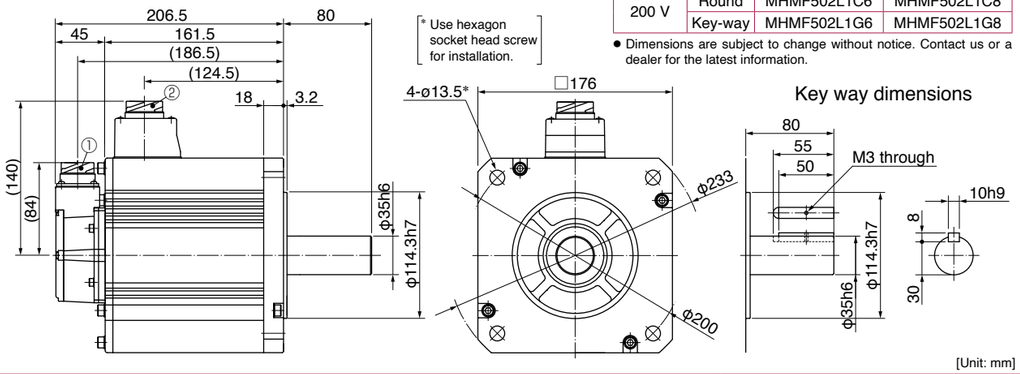

● Motor model

Mass: 19.6 kg

Power supply	Shaft	with oil seal	with protective lip
200 V	Round	MHMF502L1C6	MHMF502L1C8
	Key-way	MHMF502L1G6	MHMF502L1G8

● Dimensions are subject to change without notice. Contact us or a dealer for the latest information.

[Unit: mm]

* For motors specifications, refer to P.99, P.100.

MHMF 5.0 kW

Large size connector (JL10) type ・ with brake ・ with oil seal/ with protective lip ・ Key way shaft/ Round shaft

① Encoder connector (Large size JL10)
② Motor/Brake connector

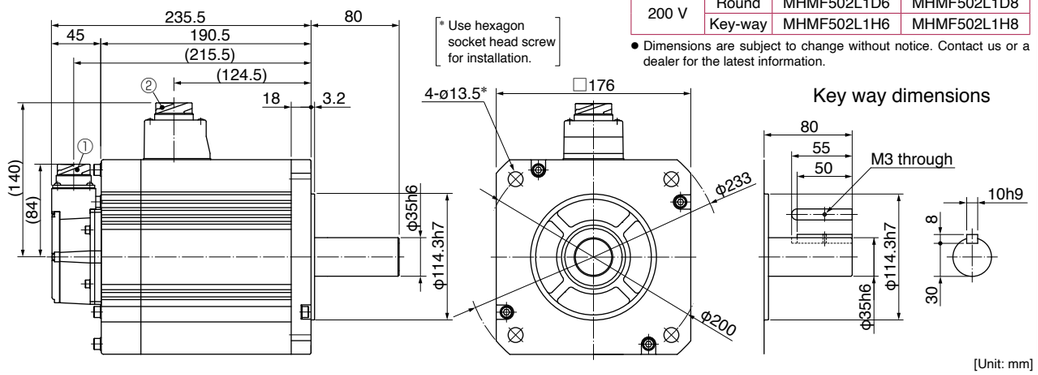

● Motor model

Mass: 22.8 kg

Power supply	Shaft	with oil seal	with protective lip
200 V	Round	MHMF502L1D6	MHMF502L1D8
	Key-way	MHMF502L1H6	MHMF502L1H8

● Dimensions are subject to change without notice. Contact us or a dealer for the latest information.

[Unit: mm]

Small size connector (JN2) type ・ without brake ・ with oil seal/ with protective lip ・ Key way shaft/ Round shaft

① Encoder connector (Small size JN2)
② Motor connector

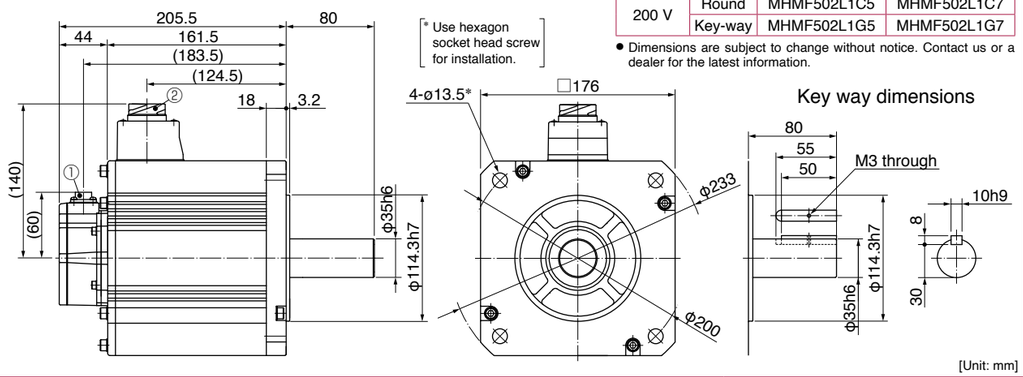

● Motor model

Mass: 19.6 kg

Power supply	Shaft	with oil seal	with protective lip
200 V	Round	MHMF502L1C5	MHMF502L1C7
	Key-way	MHMF502L1G5	MHMF502L1G7

● Dimensions are subject to change without notice. Contact us or a dealer for the latest information.

[Unit: mm]

Small size connector (JN2) type ・ with brake ・ with oil seal/ with protective lip ・ Key way shaft/ Round shaft

① Encoder connector (Small size JN2)
② Motor/Brake connector

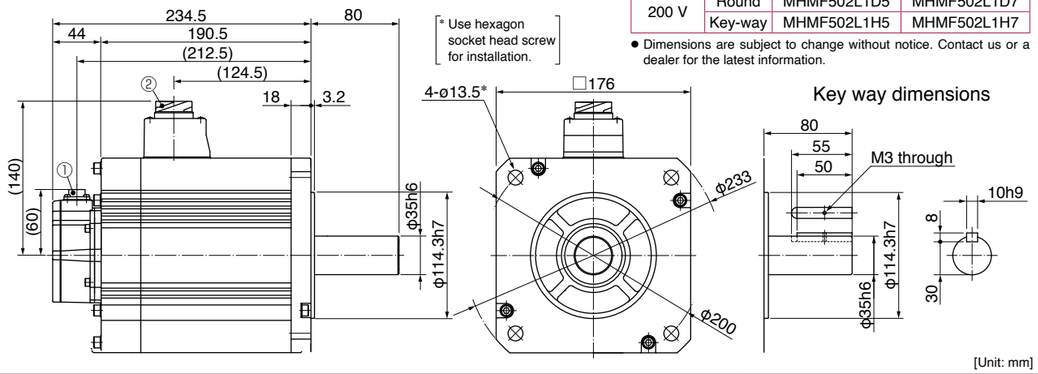

● Motor model

Mass: 22.8 kg

Power supply	Shaft	with oil seal	with protective lip
200 V	Round	MHMF502L1D5	MHMF502L1D7
	Key-way	MHMF502L1H5	MHMF502L1H7

● Dimensions are subject to change without notice. Contact us or a dealer for the latest information.

[Unit: mm]

* For motors specifications, refer to P.100.

MHMF 7.5 kW

Large size connector (JL10) type · without brake · with oil seal · Key way shaft/ Round shaft

① Encoder connector (Large size JL10)
② Motor connector

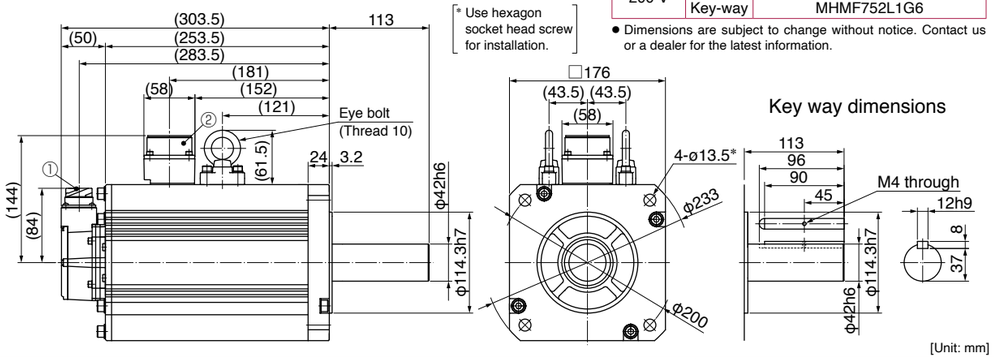

Mass: 34.8 kg

● Motor model

Power supply	Shaft	with oil seal
200 V	Round	MHMF752L1C6
	Key-way	MHMF752L1G6

● Dimensions are subject to change without notice. Contact us or a dealer for the latest information.

[Unit: mm]

Large size connector (JL10) type · with brake · with oil seal · Key way shaft/ Round shaft

① Encoder connector (Large size JL10)
② Motor connector ③ Brake connector

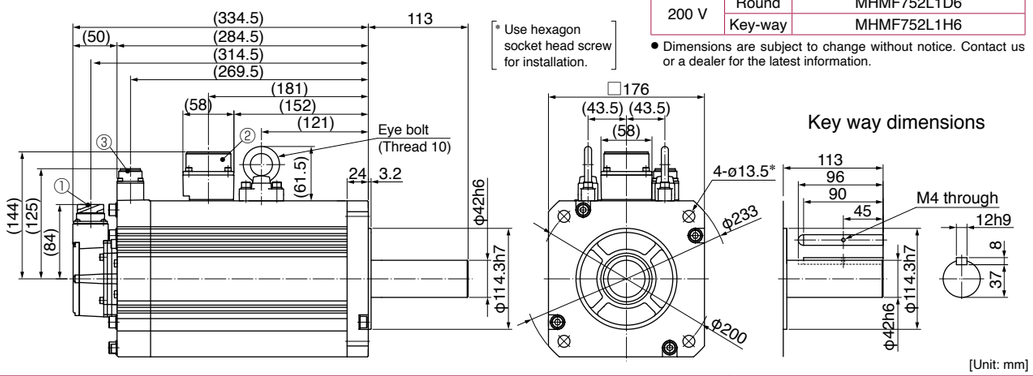

Mass: 38.9 kg

● Motor model

Power supply	Shaft	with oil seal
200 V	Round	MHMF752L1D6
	Key-way	MHMF752L1H6

● Dimensions are subject to change without notice. Contact us or a dealer for the latest information.

[Unit: mm]

Small size connector (JN2) type · without brake · with oil seal · Key way shaft/ Round shaft

① Encoder connector (Small size JN2)
② Motor connector

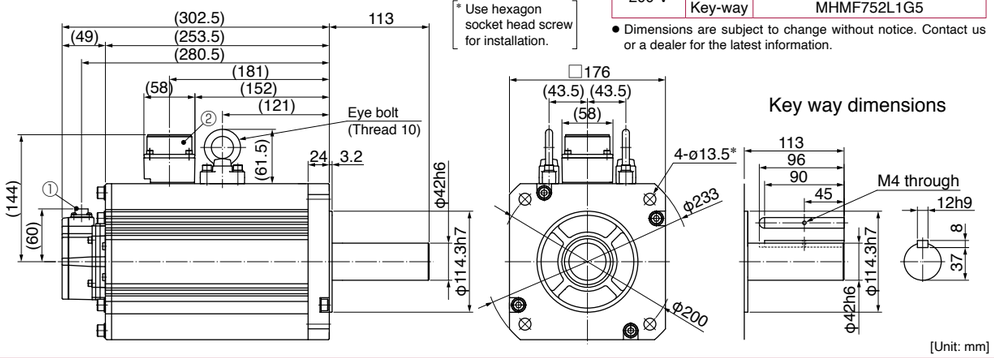

Mass: 34.8 kg

● Motor model

Power supply	Shaft	with oil seal
200 V	Round	MHMF752L1C5
	Key-way	MHMF752L1G5

● Dimensions are subject to change without notice. Contact us or a dealer for the latest information.

[Unit: mm]

* For motors specifications, refer to P.101.

MHMF 7.5 kW

Small size connector (JN2) type · with brake · with oil seal · Key way shaft/ Round shaft

① Encoder connector (Small size JN2)
② Motor connector ③ Brake connector

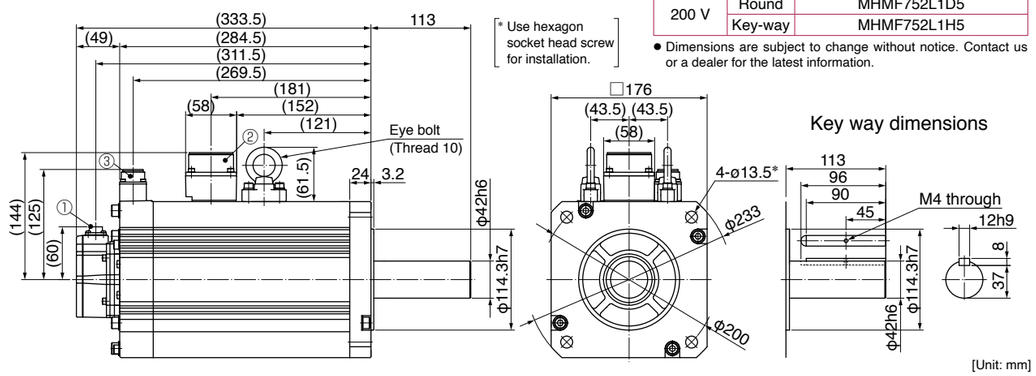

Mass: 38.9 kg

● Motor model

Power supply	Shaft	with oil seal
200 V	Round	MHMF752L1D5
	Key-way	MHMF752L1H5

● Dimensions are subject to change without notice. Contact us or a dealer for the latest information.

[Unit: mm]

MDMF 1.0 kW

Large size connector (JL10) type · without brake · with oil seal/ with protective lip · Key way shaft/ Round shaft

① Encoder connector (Large size JL10)
② Motor connector

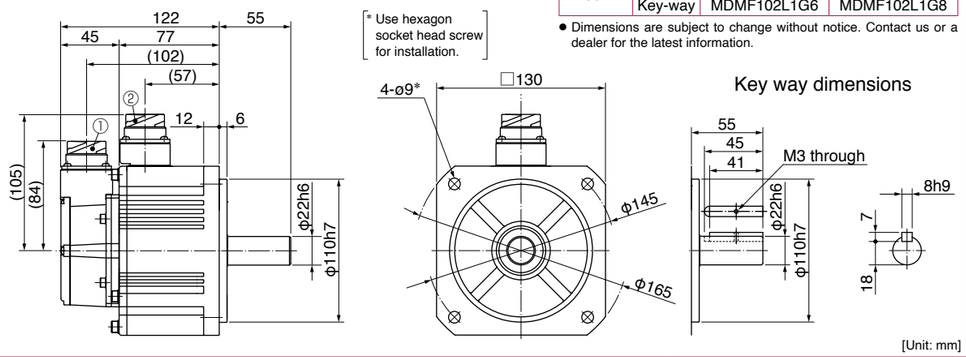

Mass: 4.6 kg

● Motor model

Power supply	Shaft	with oil seal	with protective lip
200 V	Round	MDMF102L1C6	MDMF102L1C8
	Key-way	MDMF102L1G6	MDMF102L1G8

● Dimensions are subject to change without notice. Contact us or a dealer for the latest information.

[Unit: mm]

Large size connector (JL10) type · with brake · with oil seal/ with protective lip · Key way shaft/ Round shaft

① Encoder connector (Large size JL10)
② Motor/Brake connector

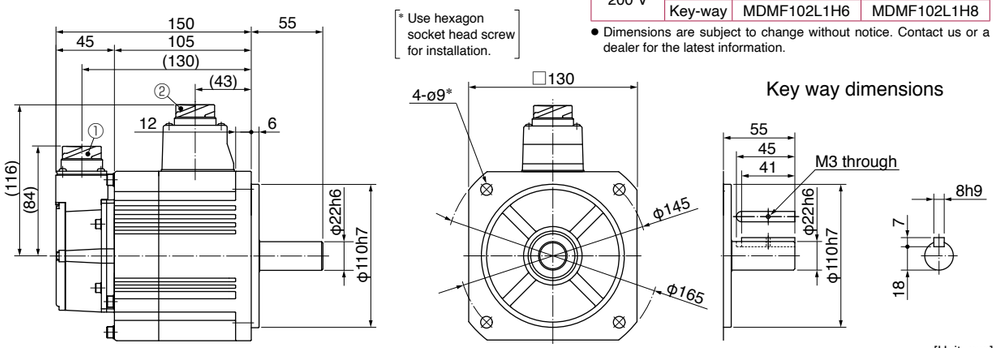

Mass: 6.1 kg

● Motor model

Power supply	Shaft	with oil seal	with protective lip
200 V	Round	MDMF102L1D6	MDMF102L1D8
	Key-way	MDMF102L1H6	MDMF102L1H8

● Dimensions are subject to change without notice. Contact us or a dealer for the latest information.

[Unit: mm]

* For motors specifications, refer to P.101, P.102.

MDMF 1.0 kW

Small size connector (JN2) type · without brake · with oil seal/ with protective lip · Key way shaft/ Round shaft

① Encoder connector (Small size JN2)
② Motor connector

Mass: 4.6 kg

● Motor model

Power supply	Shaft	with oil seal	with protective lip
200 V	Round	MDMF102L1C5	MDMF102L1C7
	Key-way	MDMF102L1G5	MDMF102L1G7

● Dimensions are subject to change without notice. Contact us or a dealer for the latest information.

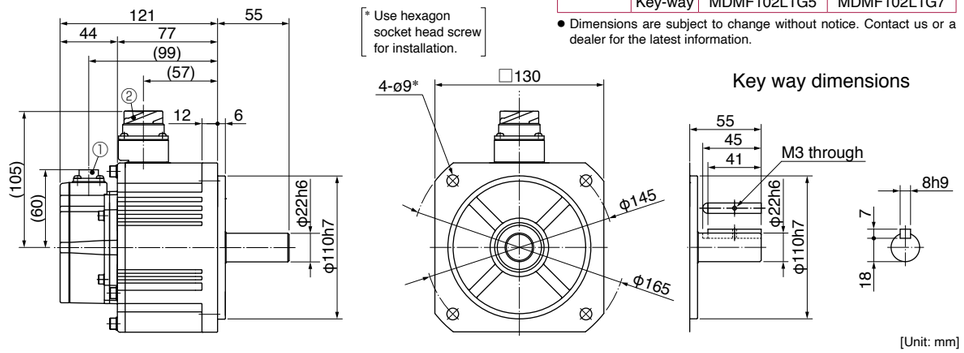

[Unit: mm]

Small size connector (JN2) type · with brake · with oil seal/ with protective lip · Key way shaft/ Round shaft

① Encoder connector (Small size JN2)
② Motor/Brake connector

Mass: 6.1 kg

● Motor model

Power supply	Shaft	with oil seal	with protective lip
200 V	Round	MDMF102L1D5	MDMF102L1D7
	Key-way	MDMF102L1H5	MDMF102L1H7

● Dimensions are subject to change without notice. Contact us or a dealer for the latest information.

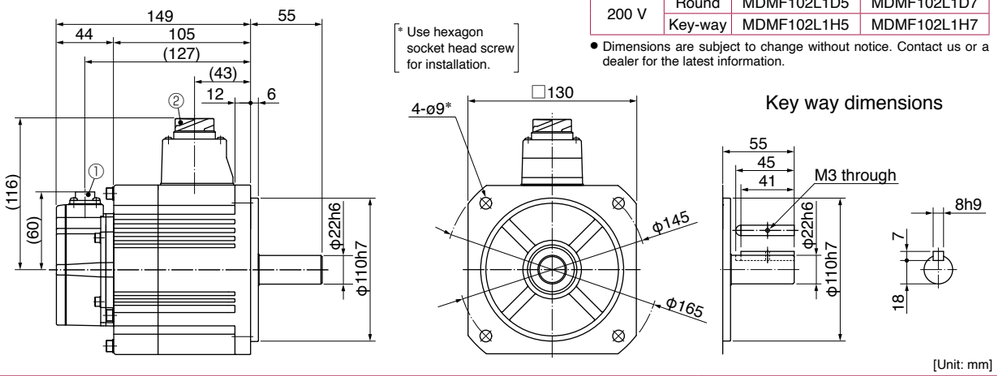

[Unit: mm]

MDMF 1.5 kW

Large size connector (JL10) type · without brake · with oil seal/ with protective lip · Key way shaft/ Round shaft

① Encoder connector (Large size JL10)
② Motor connector

Mass: 5.7 kg

● Motor model

Power supply	Shaft	with oil seal	with protective lip
200 V	Round	MDMF152L1C6	MDMF152L1C8
	Key-way	MDMF152L1G6	MDMF152L1G8

● Dimensions are subject to change without notice. Contact us or a dealer for the latest information.

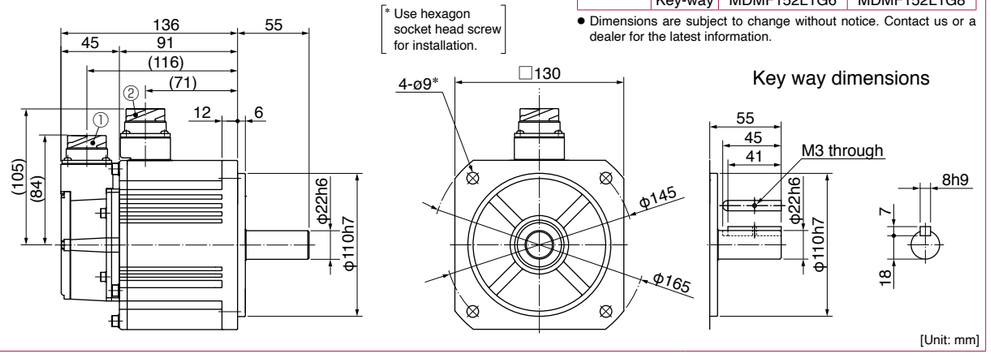

[Unit: mm]

* For motors specifications, refer to P.102, P.103.

MDMF 1.5 kW

Large size connector (JL10) type · with brake · with oil seal/ with protective lip · Key way shaft/ Round shaft

① Encoder connector (Large size JL10)
② Motor/Brake connector

Mass: 7.2 kg

● Motor model

Power supply	Shaft	with oil seal	with protective lip
200 V	Round	MDMF152L1D6	MDMF152L1D8
	Key-way	MDMF152L1H6	MDMF152L1H8

● Dimensions are subject to change without notice. Contact us or a dealer for the latest information.

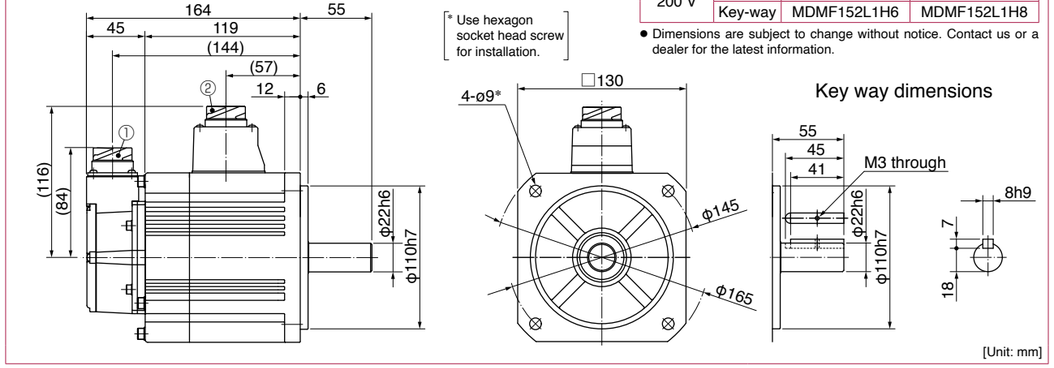

[Unit: mm]

Small size connector (JN2) type · without brake · with oil seal/ with protective lip · Key way shaft/ Round shaft

① Encoder connector (Small size JN2)
② Motor connector

Mass: 5.7 kg

● Motor model

Power supply	Shaft	with oil seal	with protective lip
200 V	Round	MDMF152L1C5	MDMF152L1C7
	Key-way	MDMF152L1G5	MDMF152L1G7

● Dimensions are subject to change without notice. Contact us or a dealer for the latest information.

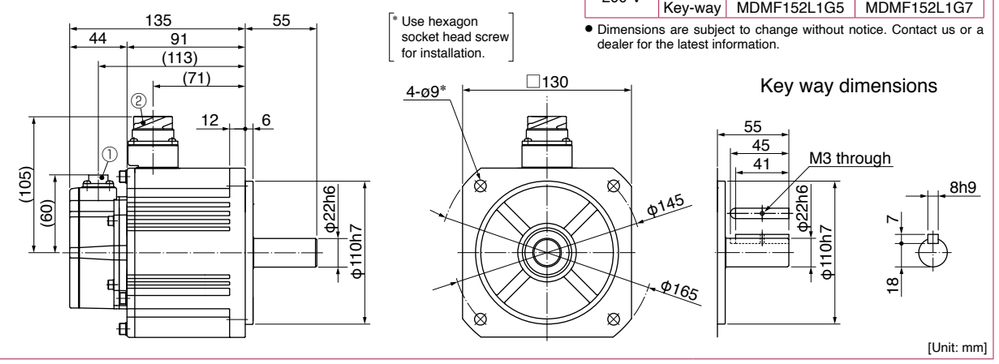

[Unit: mm]

Small size connector (JN2) type · with brake · with oil seal/ with protective lip · Key way shaft/ Round shaft

① Encoder connector (Small size JN2)
② Motor/Brake connector

Mass: 7.2 kg

● Motor model

Power supply	Shaft	with oil seal	with protective lip
200 V	Round	MDMF152L1D5	MDMF152L1D7
	Key-way	MDMF152L1H5	MDMF152L1H7

● Dimensions are subject to change without notice. Contact us or a dealer for the latest information.

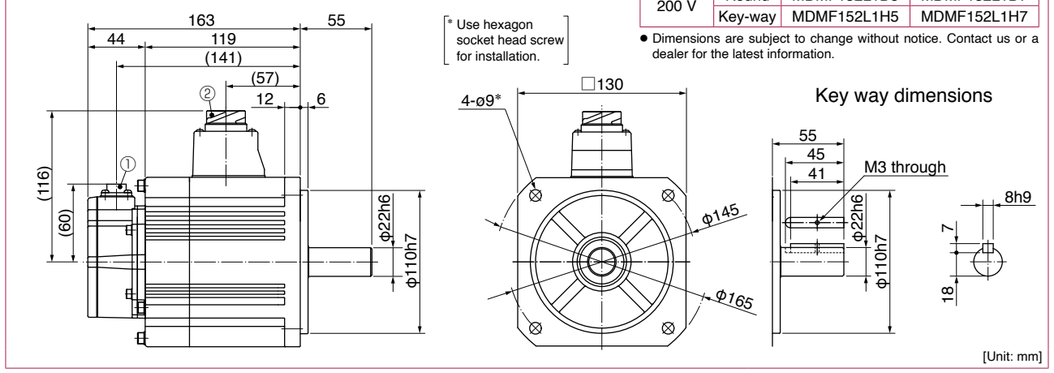

[Unit: mm]

* For motors specifications, refer to P.103.

MDMF 2.0 kW

Large size connector (JL10) type ・ without brake ・ with oil seal/ with protective lip ・ Key way shaft/ Round shaft

① Encoder connector (Large size JL10)
② Motor connector

Mass: 6.9 kg

● Motor model

Power supply	Shaft	with oil seal	with protective lip
200 V	Round	MDMF202L1C6	MDMF202L1C8
	Key-way	MDMF202L1G6	MDMF202L1G8

● Dimensions are subject to change without notice. Contact us or a dealer for the latest information.

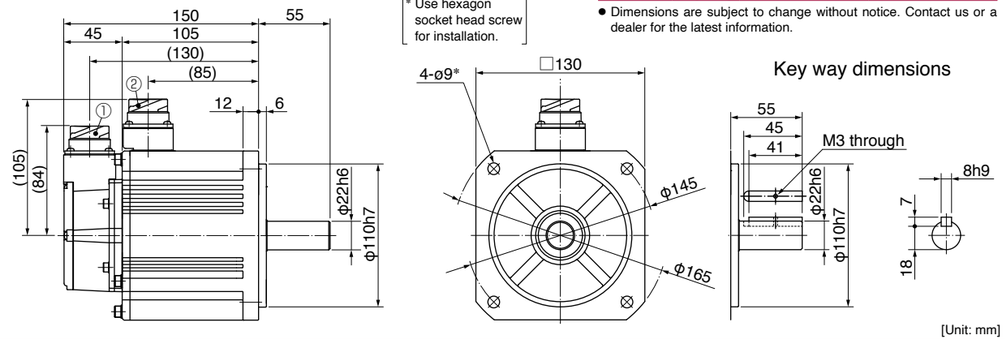

[Unit: mm]

Large size connector (JL10) type ・ with brake ・ with oil seal/ with protective lip ・ Key way shaft/ Round shaft

① Encoder connector (Large size JL10)
② Motor/Brake connector

Mass: 8.4 kg

● Motor model

Power supply	Shaft	with oil seal	with protective lip
200 V	Round	MDMF202L1D6	MDMF202L1D8
	Key-way	MDMF202L1H6	MDMF202L1H8

● Dimensions are subject to change without notice. Contact us or a dealer for the latest information.

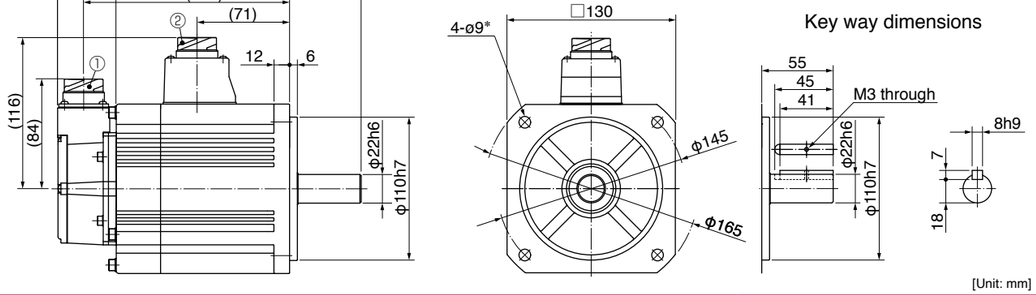

[Unit: mm]

Small size connector (JN2) type ・ without brake ・ with oil seal/ with protective lip ・ Key way shaft/ Round shaft

① Encoder connector (Small size JN2)
② Motor connector

Mass: 6.9 kg

● Motor model

Power supply	Shaft	with oil seal	with protective lip
200 V	Round	MDMF202L1C5	MDMF202L1C7
	Key-way	MDMF202L1G5	MDMF202L1G7

● Dimensions are subject to change without notice. Contact us or a dealer for the latest information.

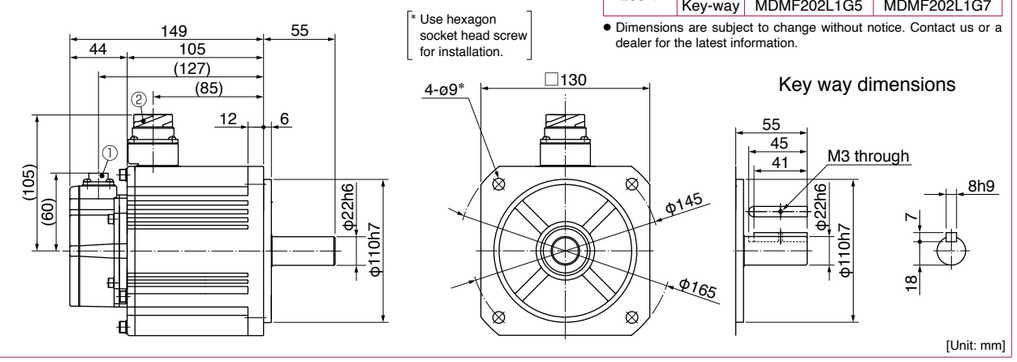

[Unit: mm]

* For motors specifications, refer to P.104.

MDMF 2.0 kW

Small size connector (JN2) type ・ with brake ・ with oil seal/ with protective lip ・ Key way shaft/ Round shaft

① Encoder connector (Small size JN2)
② Motor/Brake connector

Mass: 8.4 kg

● Motor model

Power supply	Shaft	with oil seal	with protective lip
200 V	Round	MDMF202L1D5	MDMF202L1D7
	Key-way	MDMF202L1H5	MDMF202L1H7

● Dimensions are subject to change without notice. Contact us or a dealer for the latest information.

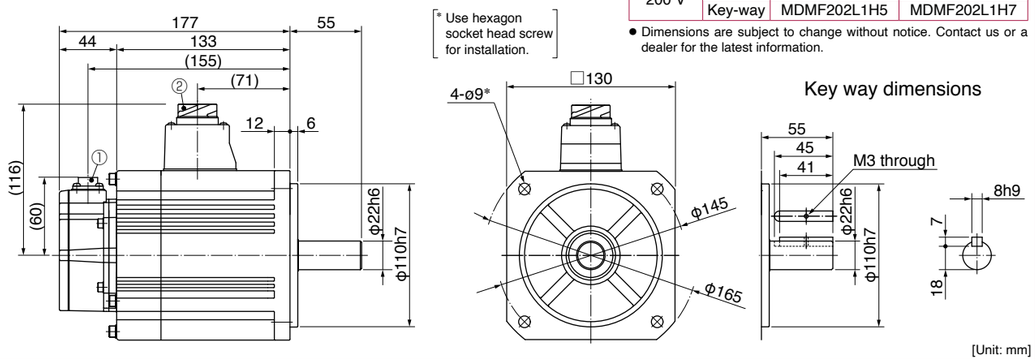

[Unit: mm]

MDMF 3.0 kW

Large size connector (JL10) type ・ without brake ・ with oil seal/ with protective lip ・ Key way shaft/ Round shaft

① Encoder connector (Large size JL10)
② Motor connector

Mass: 9.3 kg

● Motor model

Power supply	Shaft	with oil seal	with protective lip
200 V	Round	MDMF302L1C6	MDMF302L1C8
	Key-way	MDMF302L1G6	MDMF302L1G8

● Dimensions are subject to change without notice. Contact us or a dealer for the latest information.

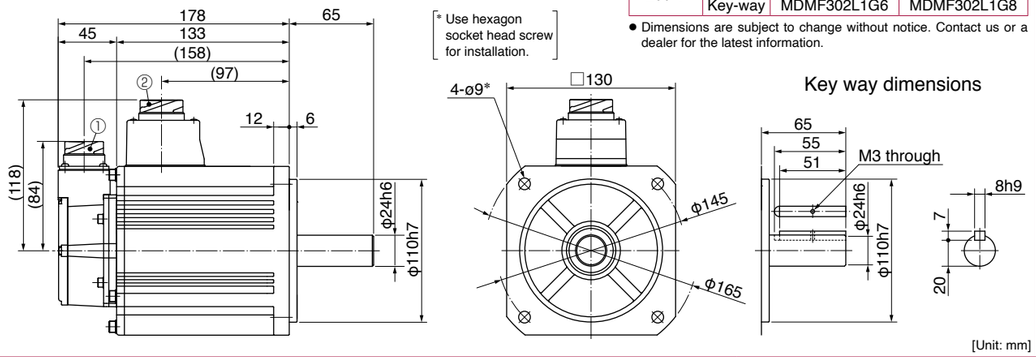

[Unit: mm]

Large size connector (JL10) type ・ with brake ・ with oil seal/ with protective lip ・ Key way shaft/ Round shaft

① Encoder connector (Large size JL10)
② Motor/Brake connector

Mass: 10.9 kg

● Motor model

Power supply	Shaft	with oil seal	with protective lip
200 V	Round	MDMF302L1D6	MDMF302L1D8
	Key-way	MDMF302L1H6	MDMF302L1H8

● Dimensions are subject to change without notice. Contact us or a dealer for the latest information.

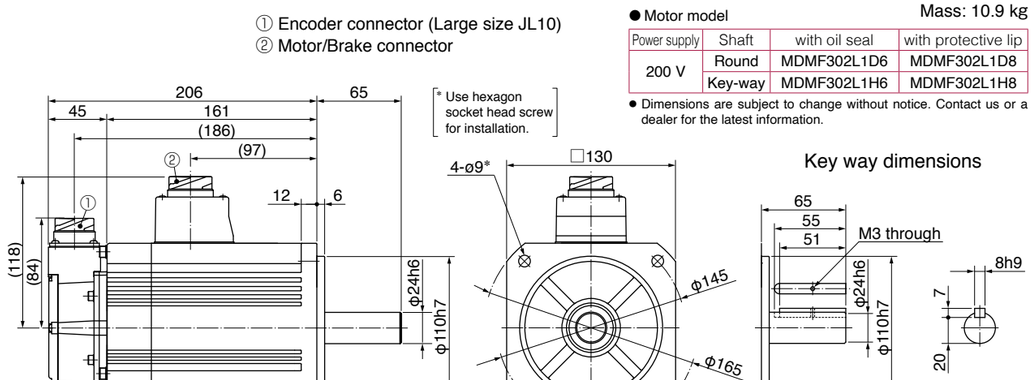

[Unit: mm]

* For motors specifications, refer to P.104, P.105.

MDMF 3.0 kW

Small size connector (JN2) type ・ without brake ・ with oil seal/ with protective lip ・ Key way shaft/ Round shaft

① Encoder connector (Small size JN2)
② Motor connector

Mass: 9.3 kg

● Motor model

Power supply	Shaft	with oil seal	with protective lip
200 V	Round	MDMF302L1C5	MDMF302L1C7
	Key-way	MDMF302L1G5	MDMF302L1G7

● Dimensions are subject to change without notice. Contact us or a dealer for the latest information.

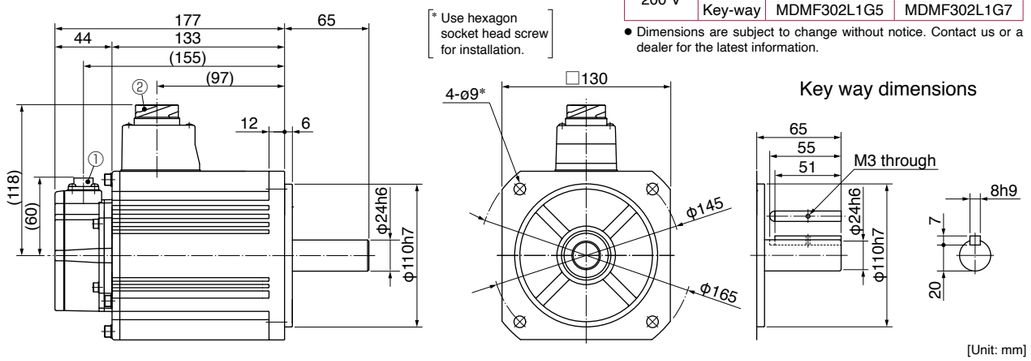

[Unit: mm]

Small size connector (JN2) type ・ with brake ・ with oil seal/ with protective lip ・ Key way shaft/ Round shaft

① Encoder connector (Small size JN2)
② Motor/Brake connector

Mass: 10.9 kg

● Motor model

Power supply	Shaft	with oil seal	with protective lip
200 V	Round	MDMF302L1D5	MDMF302L1D7
	Key-way	MDMF302L1H5	MDMF302L1H7

● Dimensions are subject to change without notice. Contact us or a dealer for the latest information.

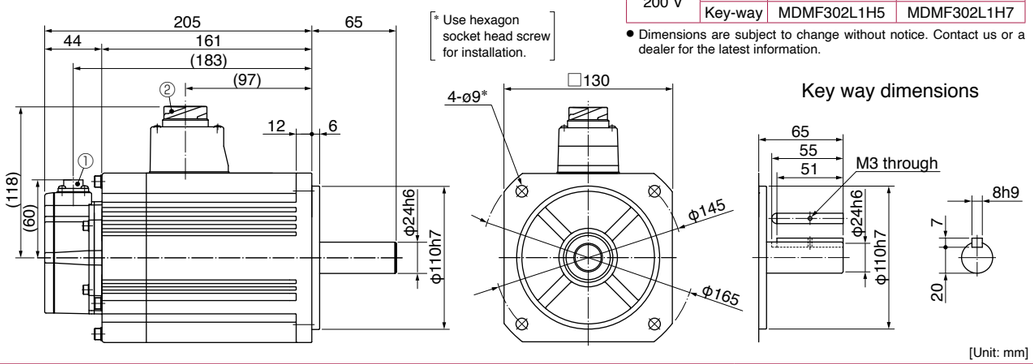

[Unit: mm]

MDMF 4.0 kW

Large size connector (JL10) type ・ without brake ・ with oil seal/ with protective lip ・ Key way shaft/ Round shaft

① Encoder connector (Large size JL10)
② Motor connector

Mass: 13.4 kg

● Motor model

Power supply	Shaft	with oil seal	with protective lip
200 V	Round	MDMF402L1C6	MDMF402L1C8
	Key-way	MDMF402L1G6	MDMF402L1G8

● Dimensions are subject to change without notice. Contact us or a dealer for the latest information.

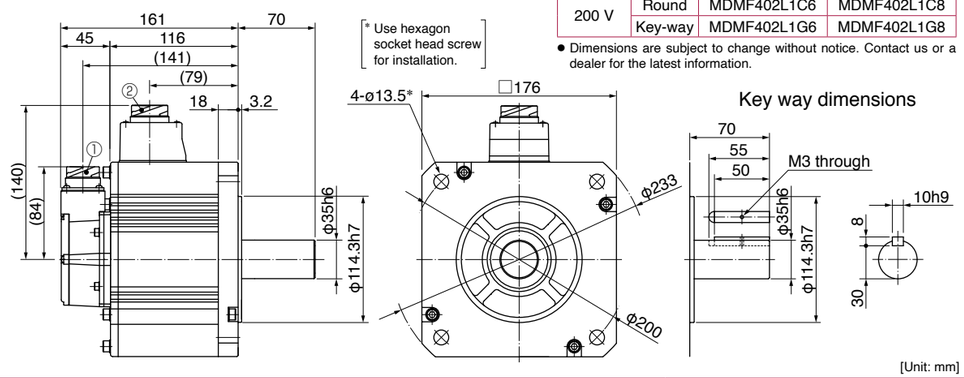

[Unit: mm]

* For motors specifications, refer to P.105, P.106.

MDMF 4.0 kW

Large size connector (JL10) type ・ with brake ・ with oil seal/ with protective lip ・ Key way shaft/ Round shaft

① Encoder connector (Large size JL10)
② Motor/Brake connector

Mass: 16.8 kg

● Motor model

Power supply	Shaft	with oil seal	with protective lip
200 V	Round	MDMF402L1D6	MDMF402L1D8
	Key-way	MDMF402L1H6	MDMF402L1H8

● Dimensions are subject to change without notice. Contact us or a dealer for the latest information.

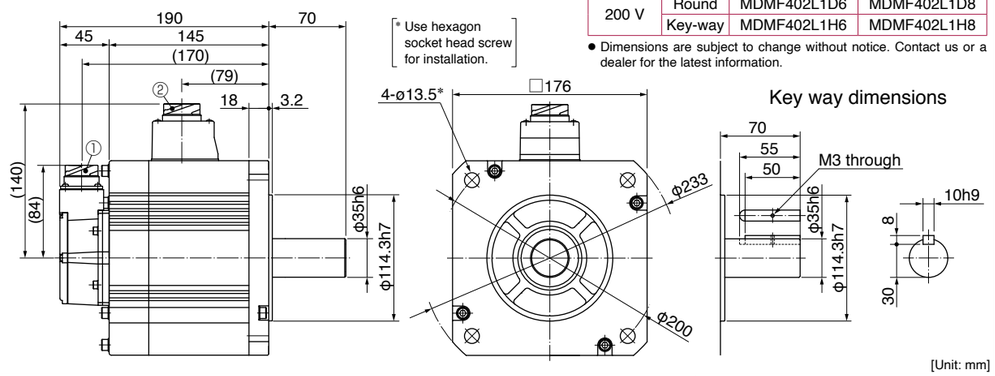

[Unit: mm]

Small size connector (JN2) type ・ without brake ・ with oil seal/ with protective lip ・ Key way shaft/ Round shaft

① Encoder connector (Small size JN2)
② Motor connector

Mass: 13.4 kg

● Motor model

Power supply	Shaft	with oil seal	with protective lip
200 V	Round	MDMF402L1C5	MDMF402L1C7
	Key-way	MDMF402L1G5	MDMF402L1G7

● Dimensions are subject to change without notice. Contact us or a dealer for the latest information.

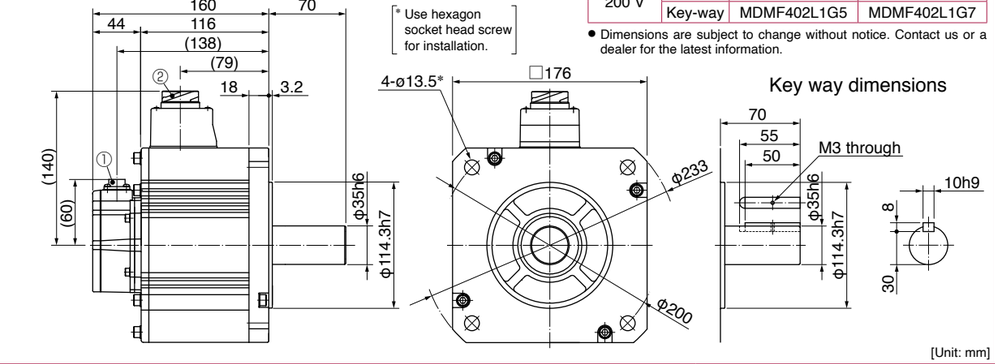

[Unit: mm]

Small size connector (JN2) type ・ with brake ・ with oil seal/ with protective lip ・ Key way shaft/ Round shaft

① Encoder connector (Small size JN2)
② Motor/Brake connector

Mass: 16.8 kg

● Motor model

Power supply	Shaft	with oil seal	with protective lip
200 V	Round	MDMF402L1D5	MDMF402L1D7
	Key-way	MDMF402L1H5	MDMF402L1H7

● Dimensions are subject to change without notice. Contact us or a dealer for the latest information.

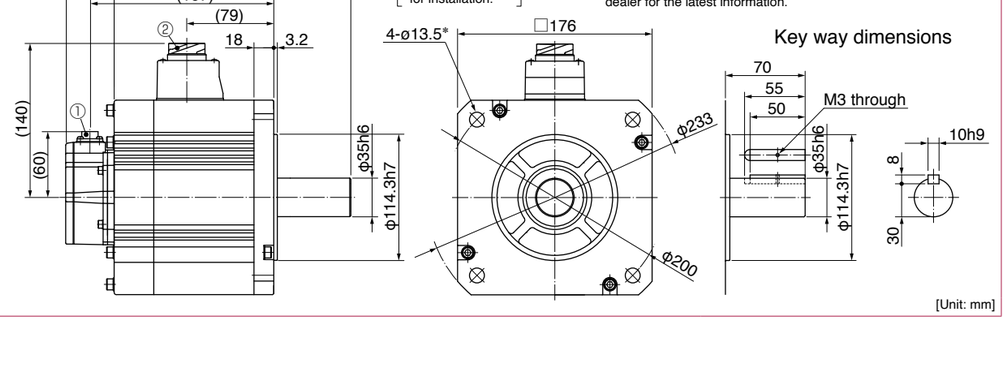

[Unit: mm]

* For motors specifications, refer to P.106.

MDMF 5.0 kW

Large size connector (JL10) type ・ without brake ・ with oil seal/ with protective lip ・ Key way shaft/ Round shaft

① Encoder connector (Large size JL10)
② Motor connector

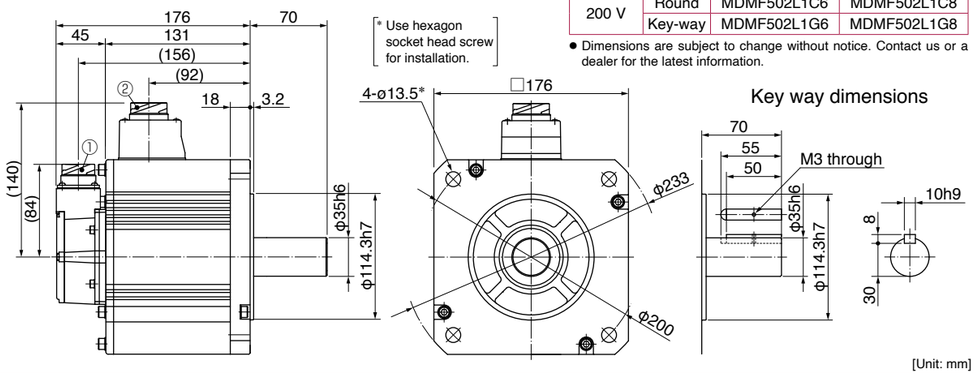

● Motor model — Mass: 15.6 kg

Power supply	Shaft	with oil seal	with protective lip
200 V	Round	MDMF502L1C6	MDMF502L1C8
	Key-way	MDMF502L1G6	MDMF502L1G8

● Dimensions are subject to change without notice. Contact us or a dealer for the latest information.

[Unit: mm]

Large size connector (JL10) type ・ with brake ・ with oil seal/ with protective lip ・ Key way shaft/ Round shaft

① Encoder connector (Large size JL10)
② Motor/Brake connector

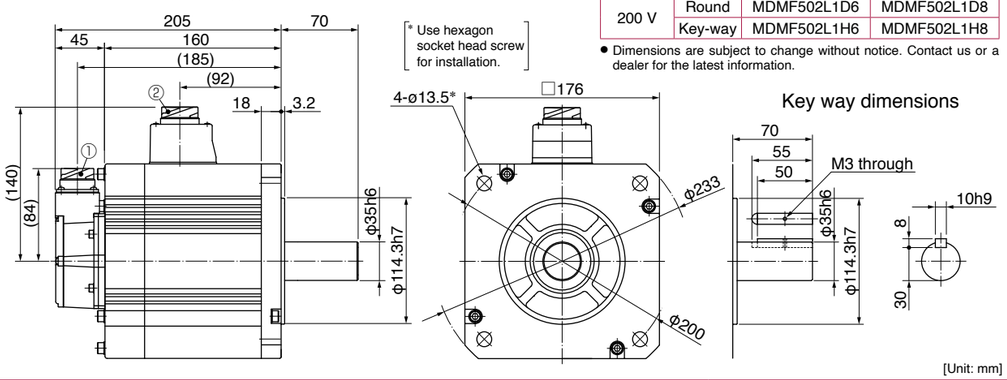

● Motor model — Mass: 19.0 kg

Power supply	Shaft	with oil seal	with protective lip
200 V	Round	MDMF502L1D6	MDMF502L1D8
	Key-way	MDMF502L1H6	MDMF502L1H8

● Dimensions are subject to change without notice. Contact us or a dealer for the latest information.

[Unit: mm]

Small size connector (JN2) type ・ without brake ・ with oil seal/ with protective lip ・ Key way shaft/ Round shaft

① Encoder connector (Small size JN2)
② Motor connector

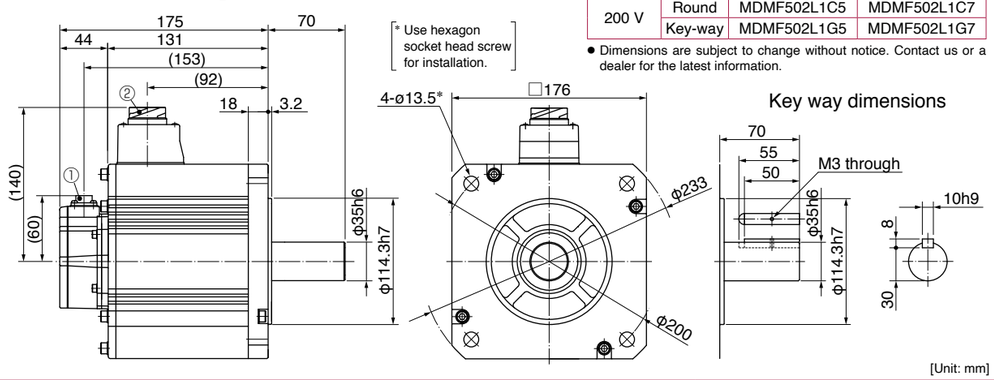

● Motor model — Mass: 15.6 kg

Power supply	Shaft	with oil seal	with protective lip
200 V	Round	MDMF502L1C5	MDMF502L1C7
	Key-way	MDMF502L1G5	MDMF502L1G7

● Dimensions are subject to change without notice. Contact us or a dealer for the latest information.

[Unit: mm]

* For motors specifications, refer to P.107.

MDMF 5.0 kW

Small size connector (JN2) type ・ with brake ・ with oil seal/ with protective lip ・ Key way shaft/ Round shaft

① Encoder connector (Small size JN2)
② Motor/Brake connector

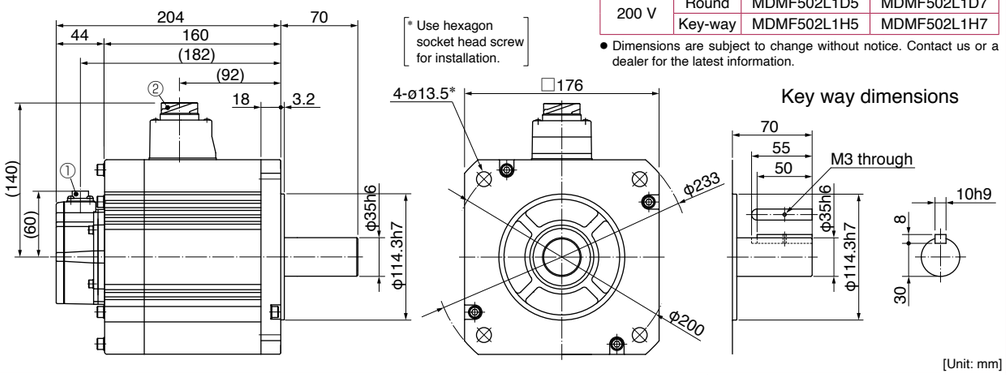

● Motor model — Mass: 19.0 kg

Power supply	Shaft	with oil seal	with protective lip
200 V	Round	MDMF502L1D5	MDMF502L1D7
	Key-way	MDMF502L1H5	MDMF502L1H7

● Dimensions are subject to change without notice. Contact us or a dealer for the latest information.

[Unit: mm]

MDMF 7.5 kW

Large size connector (JL10) type ・ without brake ・ with oil seal ・ Key way shaft/ Round shaft

① Encoder connector (Large size JL10)
② Motor connector

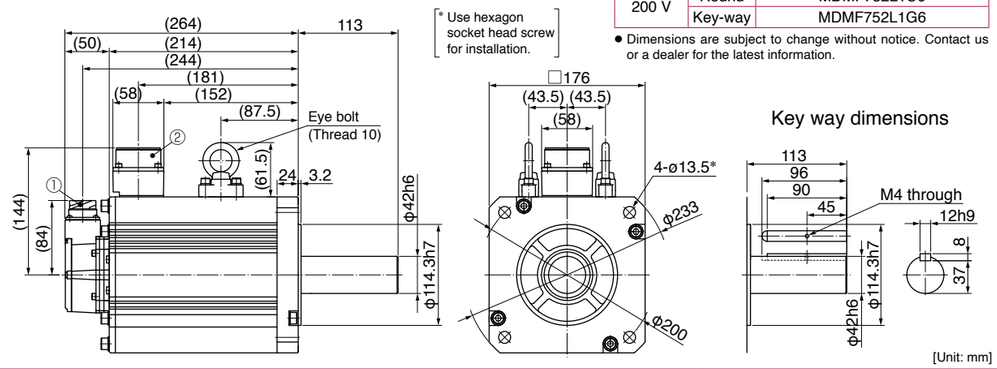

● Motor model — Mass: 27.8 kg

Power supply	Shaft	with oil seal
200 V	Round	MDMF752L1C6
	Key-way	MDMF752L1G6

● Dimensions are subject to change without notice. Contact us or a dealer for the latest information.

[Unit: mm]

Large size connector (JL10) type ・ with brake ・ with oil seal ・ Key way shaft/ Round shaft

① Encoder connector (Large size JL10)
② Motor connector ③ Brake connector

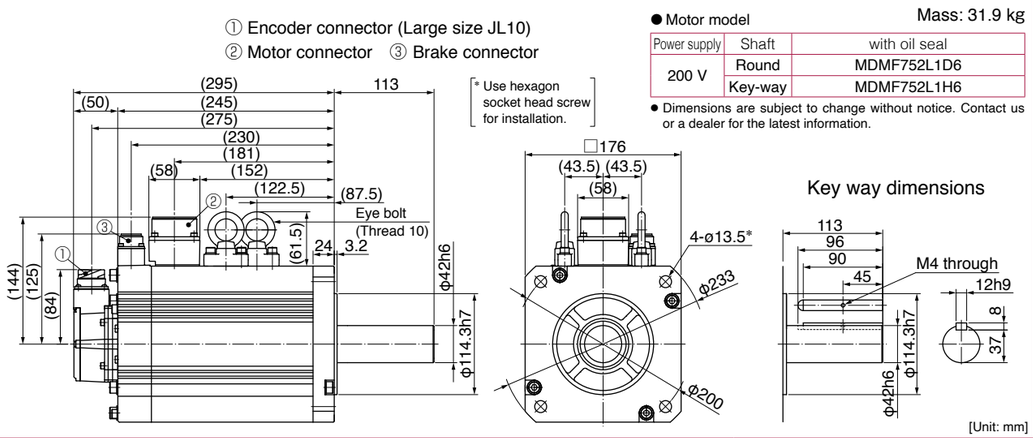

● Motor model — Mass: 31.9 kg

Power supply	Shaft	with oil seal
200 V	Round	MDMF752L1D6
	Key-way	MDMF752L1H6

● Dimensions are subject to change without notice. Contact us or a dealer for the latest information.

[Unit: mm]

* For motors specifications, refer to P.107, P.108.

MDMF 7.5 kW

Small size connector (JN2) type · without brake · with oil seal · Key way shaft/ Round shaft

① Encoder connector (Small size JN2)
② Motor connector

Mass: 27.8 kg

● Motor model

Power supply	Shaft	with oil seal
200 V	Round	MDMF752L1C5
	Key-way	MDMF752L1G5

● Dimensions are subject to change without notice. Contact us or a dealer for the latest information.

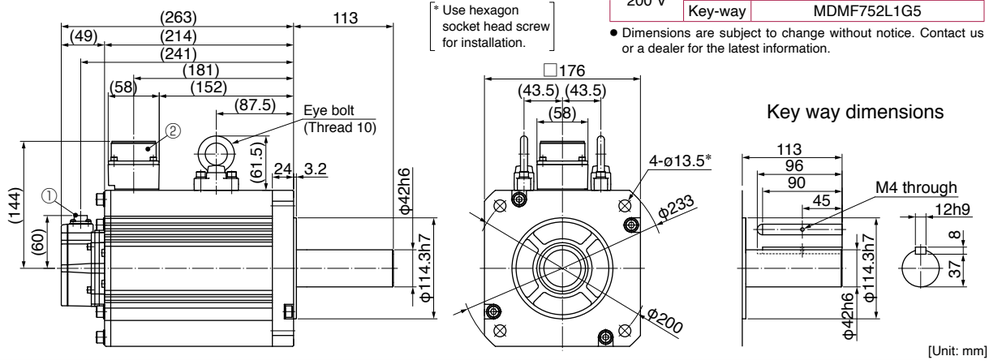

[Unit: mm]

Small size connector (JN2) type · with brake · with oil seal · Key way shaft/ Round shaft

① Encoder connector (Small size JN2)
② Motor connector ③ Brake connector

Mass: 31.9 kg

● Motor model

Power supply	Shaft	with oil seal
200 V	Round	MDMF752L1D5
	Key-way	MDMF752L1H5

● Dimensions are subject to change without notice. Contact us or a dealer for the latest information.

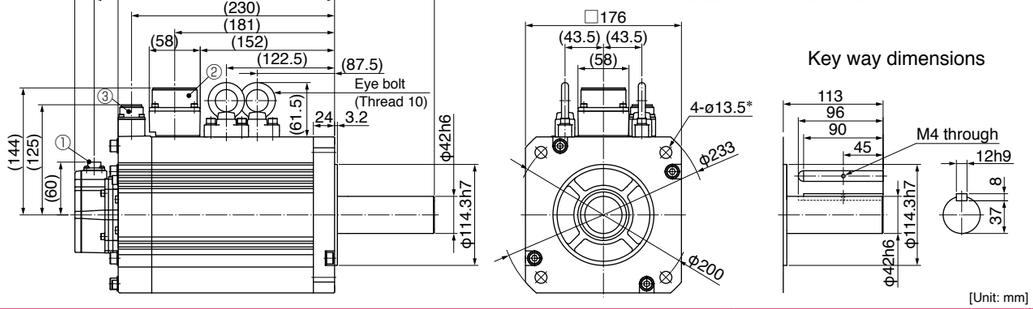

[Unit: mm]

MDMF 11.0 kW

Large size connector (JL10) type · without brake · with oil seal · Key way shaft/ Round shaft

① Encoder connector (Large size JL10)
② Motor connector

Mass: 48.5 kg

● Motor model

Power supply	Shaft	with oil seal
200 V	Round	MDMFC12L1C6
	Key-way	MDMFC12L1G6

● Dimensions are subject to change without notice. Contact us or a dealer for the latest information.

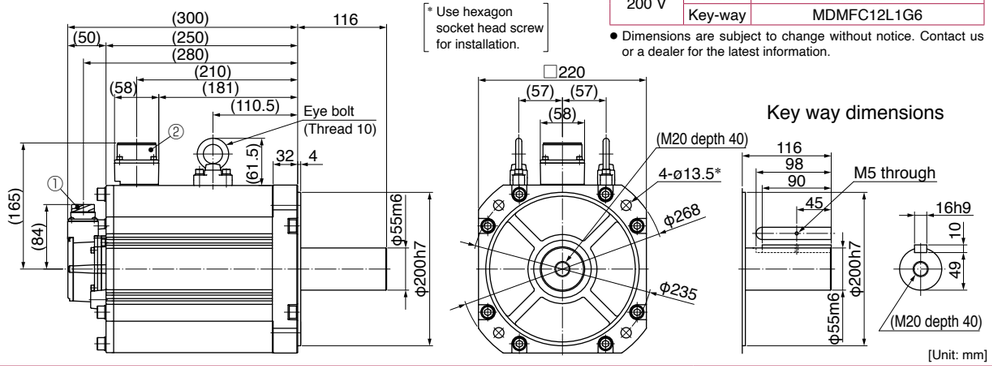

[Unit: mm]

* For motors specifications, refer to P.108, P.109.

MDMF 11.0 kW

Large size connector (JL10) type · with brake · with oil seal · Key way shaft/ Round shaft

① Encoder connector (Large size JL10)
② Motor connector ③ Brake connector

Mass: 54.5 kg

● Motor model

Power supply	Shaft	with oil seal
200 V	Round	MDMFC12L1D6
	Key-way	MDMFC12L1H6

● Dimensions are subject to change without notice. Contact us or a dealer for the latest information.

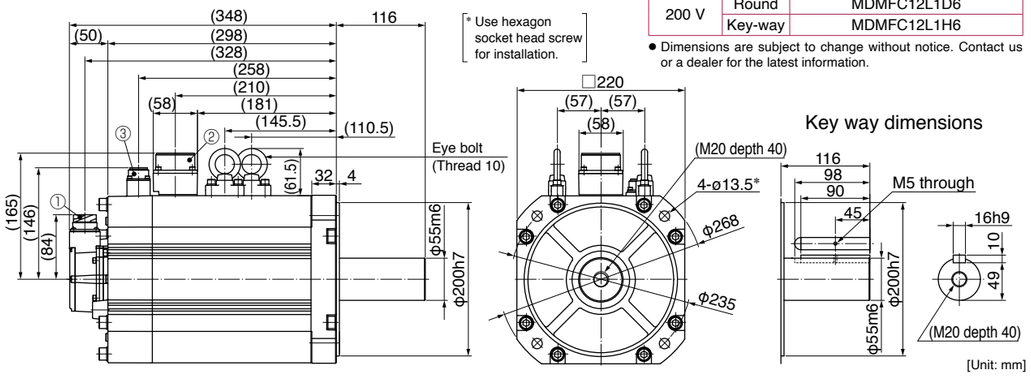

[Unit: mm]

Small size connector (JN2) type · without brake · with oil seal · Key way shaft/ Round shaft

① Encoder connector (Small size JN2)
② Motor connector

Mass: 48.5 kg

● Motor model

Power supply	Shaft	with oil seal
200 V	Round	MDMFC12L1C5
	Key-way	MDMFC12L1G5

● Dimensions are subject to change without notice. Contact us or a dealer for the latest information.

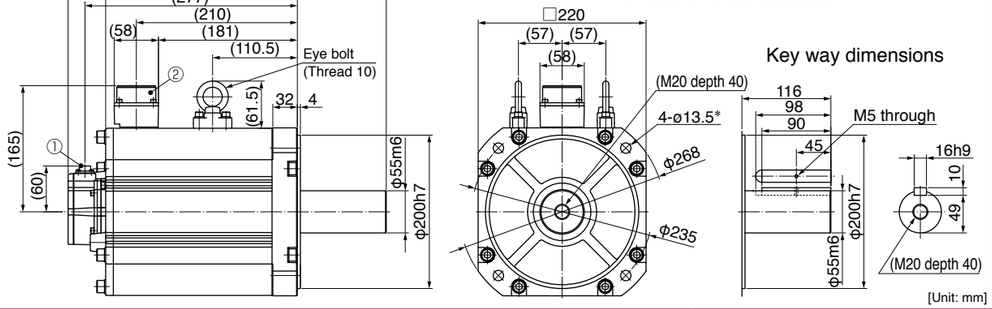

[Unit: mm]

Small size connector (JN2) type · with brake · with oil seal · Key way shaft/ Round shaft

① Encoder connector (Small size JN2)
② Motor connector ③ Brake connector

Mass: 54.5 kg

● Motor model

Power supply	Shaft	with oil seal
200 V	Round	MDMFC12L1D5
	Key-way	MDMFC12L1H5

● Dimensions are subject to change without notice. Contact us or a dealer for the latest information.

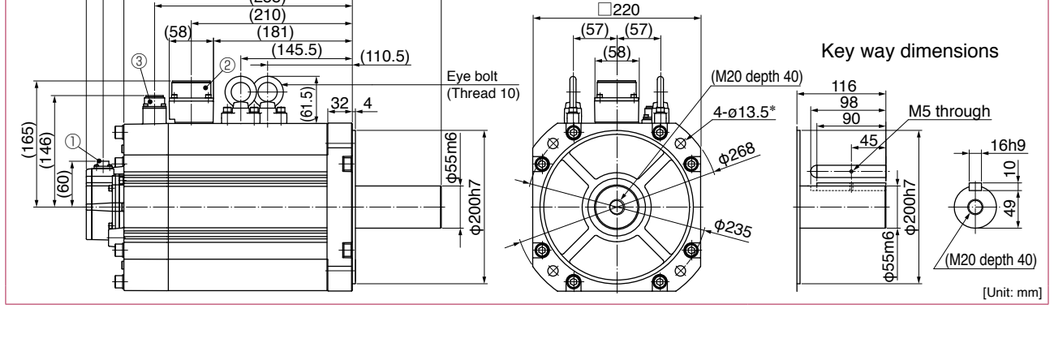

[Unit: mm]

* For motors specifications, refer to P.109.

MDMF 15.0 kW

Large size connector (JL10) type · without brake · with oil seal · Key way shaft/ Round shaft

① Encoder connector (Large size JL10)
② Motor connector

Mass: 60.3 kg

● Motor model

Power supply	Shaft	with oil seal
200 V	Round	MDMFC52L1C6
	Key-way	MDMFC52L1G6

● Dimensions are subject to change without notice. Contact us or a dealer for the latest information.

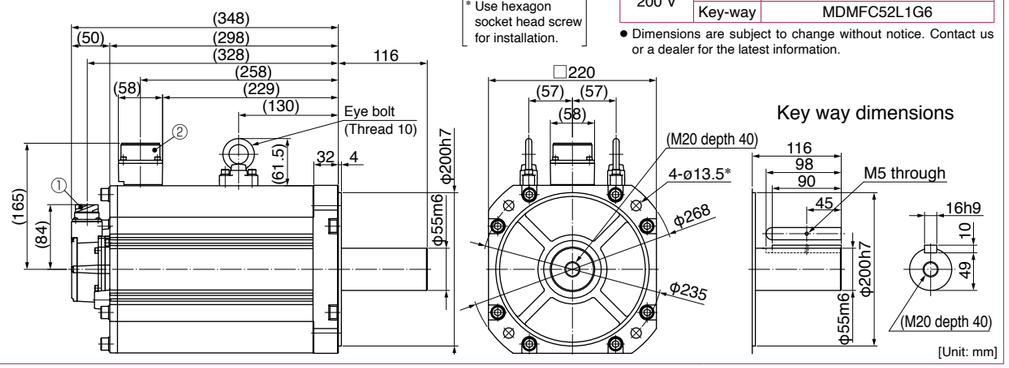

[Unit: mm]

Large size connector (JL10) type · with brake · with oil seal · Key way shaft/ Round shaft

① Encoder connector (Large size JL10)
② Motor connector ③ Brake connector

Mass: 66.5 kg

● Motor model

Power supply	Shaft	with oil seal
200 V	Round	MDMFC52L1D6
	Key-way	MDMFC52L1H6

● Dimensions are subject to change without notice. Contact us or a dealer for the latest information.

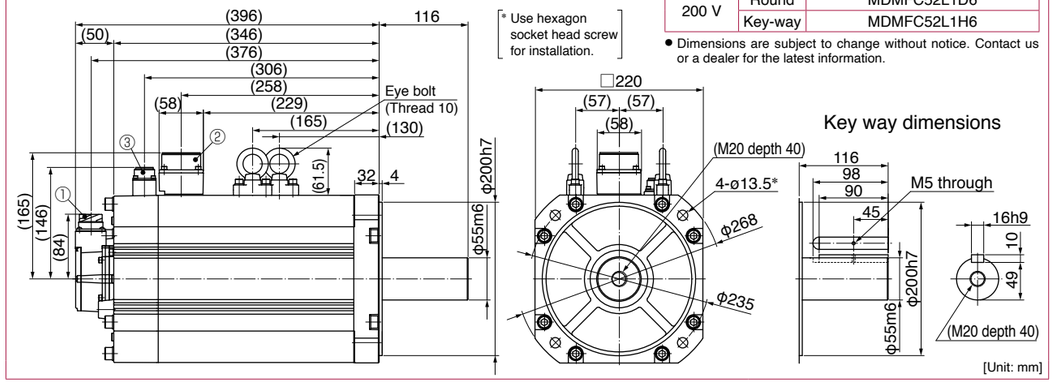

[Unit: mm]

Small size connector (JN2) type · without brake · with oil seal · Key way shaft/ Round shaft

① Encoder connector (Small size JN2)
② Motor connector

Mass: 60.3 kg

● Motor model

Power supply	Shaft	with oil seal
200 V	Round	MDMFC52L1C5
	Key-way	MDMFC52L1G5

● Dimensions are subject to change without notice. Contact us or a dealer for the latest information.

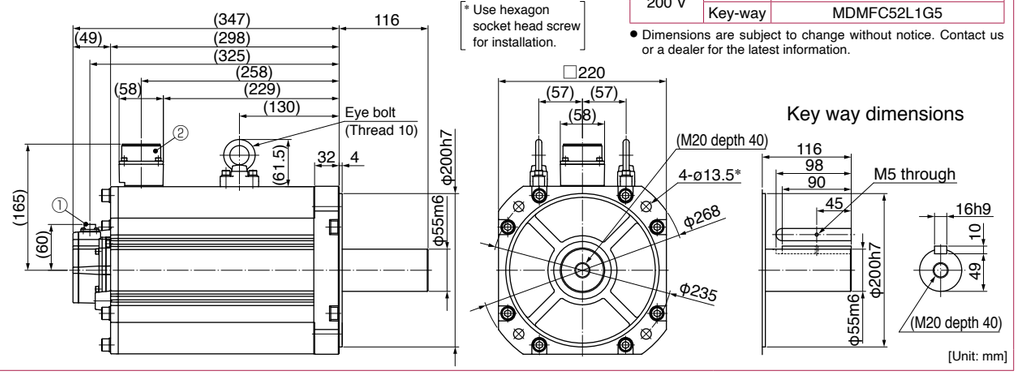

[Unit: mm]

* For motors specifications, refer to P.110.

MDMF 15.0 kW

Small size connector (JN2) type · with brake · with oil seal · Key way shaft/ Round shaft

① Encoder connector (Small size JN2)
② Motor connector ③ Brake connector

Mass: 66.5 kg

● Motor model

Power supply	Shaft	with oil seal
200 V	Round	MDMFC52L1D5
	Key-way	MDMFC52L1H5

● Dimensions are subject to change without notice. Contact us or a dealer for the latest information.

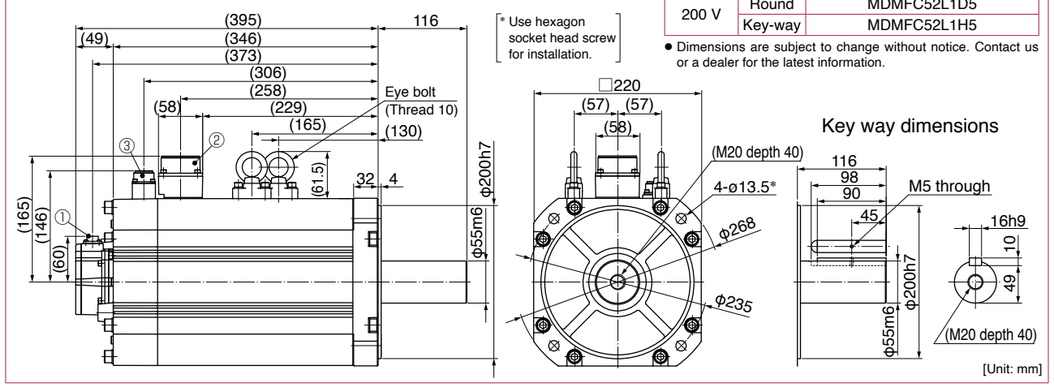

[Unit: mm]

MDMF 22.0 kW

Large size connector (JL10) type · without brake · with oil seal · Key way shaft/ Round shaft

① Encoder connector (Large size JL10)
② Terminal box

Mass: 98.8 kg

● Motor model

Power supply	Shaft	with oil seal
200 V	Round	MDMFD22L1C6
	Key-way	MDMFD22L1G6

● Dimensions are subject to change without notice. Contact us or a dealer for the latest information.

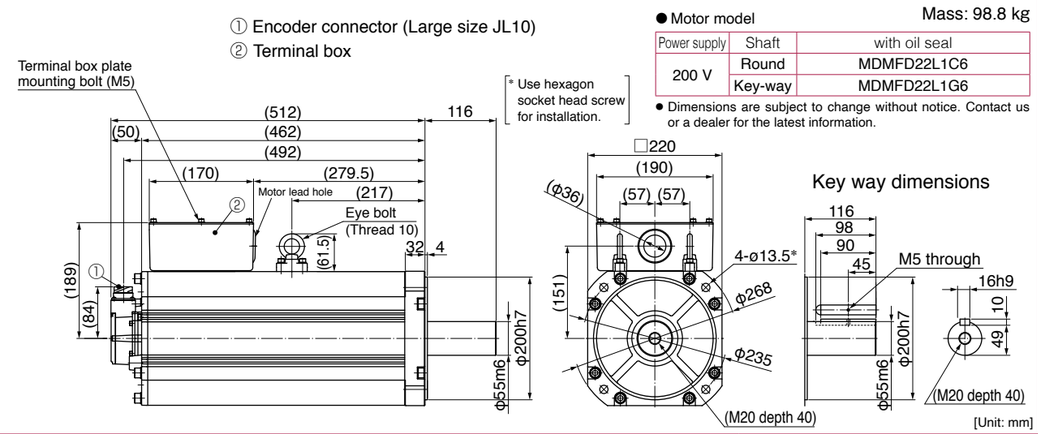

[Unit: mm]

Large size connector (JL10) type · with brake · with oil seal · Key way shaft/ Round shaft

① Encoder connector (Large size JL10)
② Terminal box ③ Brake connector

Mass: 112.0 kg

● Motor model

Power supply	Shaft	with oil seal
200 V	Round	MDMFD22L1D6
	Key-way	MDMFD22L1H6

● Dimensions are subject to change without notice. Contact us or a dealer for the latest information.

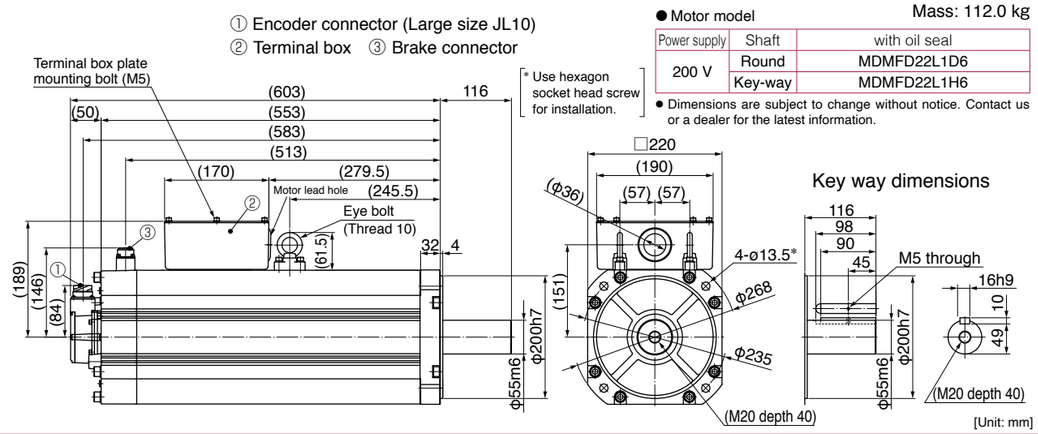

[Unit: mm]

* For motors specifications, refer to P.110, P.111.

MDMF 22.0 kW

Small size connector (JN2) type · without brake · with oil seal · Key way shaft/ Round shaft

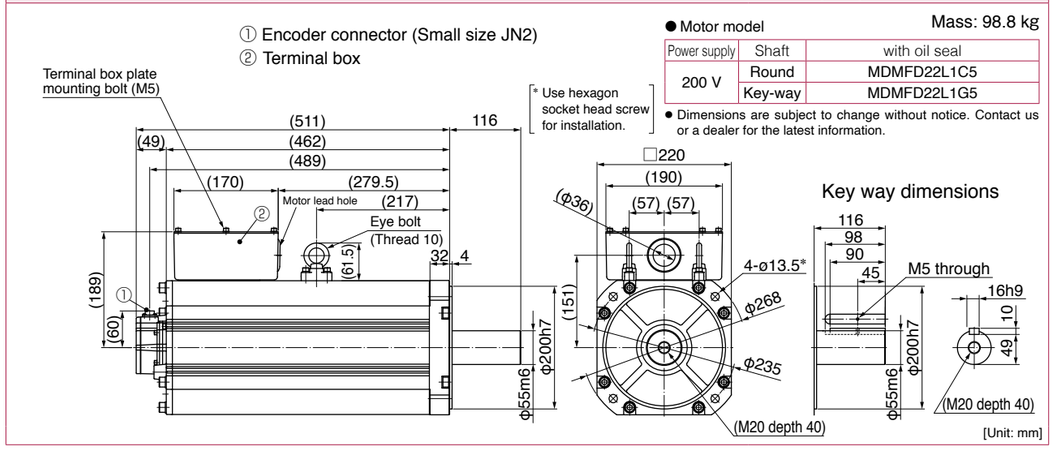

● Motor model — Mass: 98.8 kg

Power supply	Shaft	with oil seal
200 V	Round	MDMFD22L1C5
	Key-way	MDMFD22L1G5

● Dimensions are subject to change without notice. Contact us or a dealer for the latest information.

[Unit: mm]

Small size connector (JN2) type · with brake · with oil seal · Key way shaft/ Round shaft

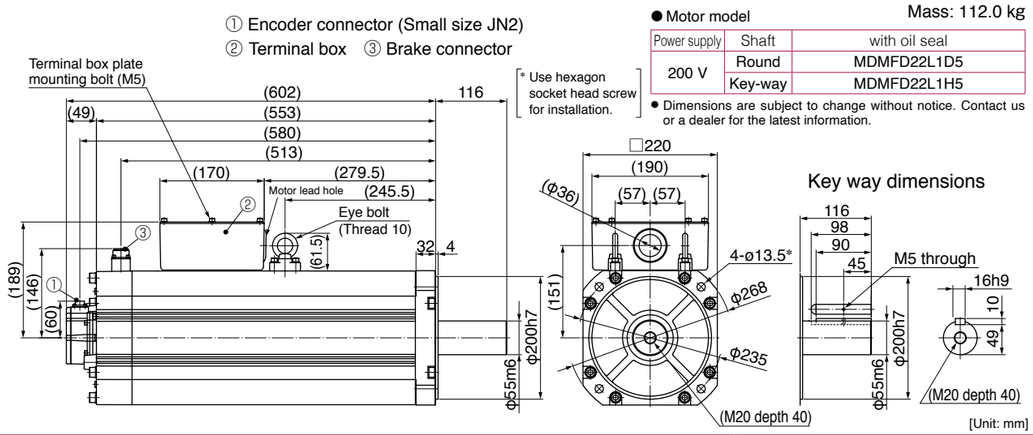

● Motor model — Mass: 112.0 kg

Power supply	Shaft	with oil seal
200 V	Round	MDMFD22L1D5
	Key-way	MDMFD22L1H5

● Dimensions are subject to change without notice. Contact us or a dealer for the latest information.

[Unit: mm]

MGMF 0.85 kW

Large size connector (JL10) type · without brake · with oil seal/ with protective lip · Key way shaft/ Round shaft

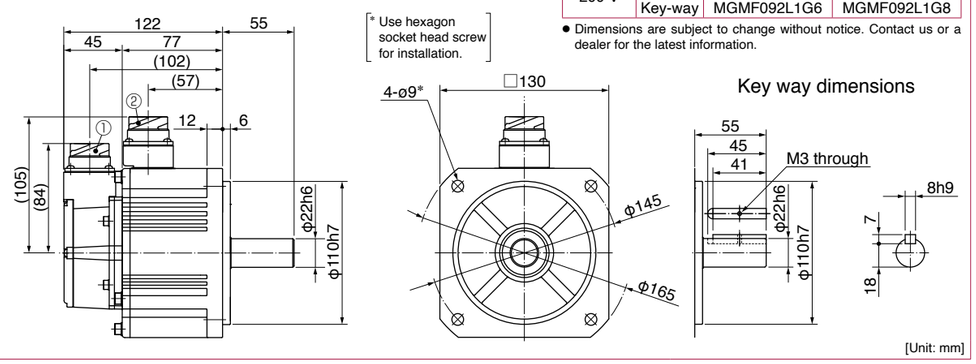

● Motor model — Mass: 4.6 kg

Power supply	Shaft	with oil seal	with protective lip
200 V	Round	MGMF092L1C6	MGMF092L1C8
	Key-way	MGMF092L1G6	MGMF092L1G8

● Dimensions are subject to change without notice. Contact us or a dealer for the latest information.

[Unit: mm]

* For motors specifications, refer to P.111, P.112.

MGMF 0.85 kW

Large size connector (JL10) type · with brake · with oil seal/ with protective lip · Key way shaft/ Round shaft

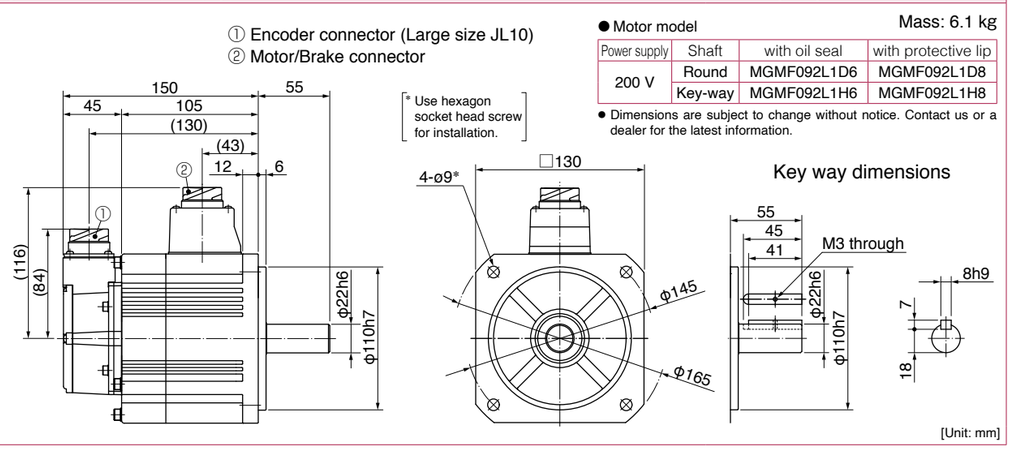

● Motor model — Mass: 6.1 kg

Power supply	Shaft	with oil seal	with protective lip
200 V	Round	MGMF092L1D6	MGMF092L1D8
	Key-way	MGMF092L1H6	MGMF092L1H8

● Dimensions are subject to change without notice. Contact us or a dealer for the latest information.

[Unit: mm]

Small size connector (JN2) type · without brake · with oil seal/ with protective lip · Key way shaft/ Round shaft

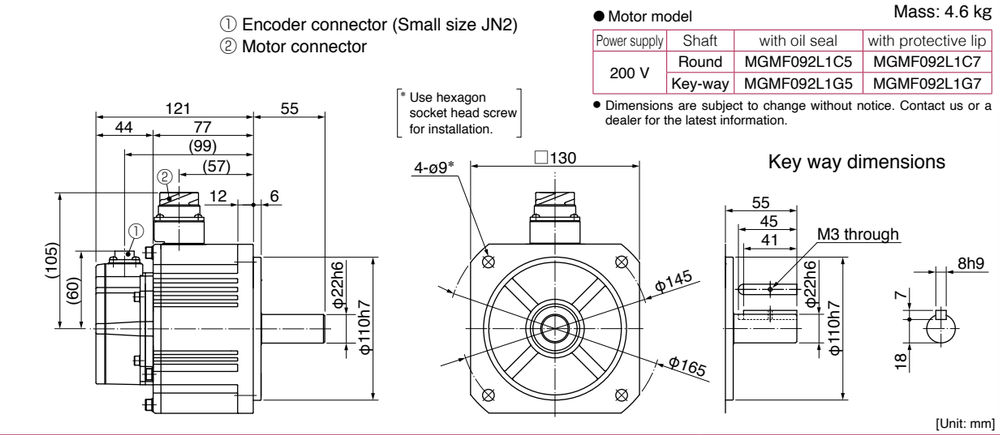

● Motor model — Mass: 4.6 kg

Power supply	Shaft	with oil seal	with protective lip
200 V	Round	MGMF092L1C5	MGMF092L1C7
	Key-way	MGMF092L1G5	MGMF092L1G7

● Dimensions are subject to change without notice. Contact us or a dealer for the latest information.

[Unit: mm]

Small size connector (JN2) type · with brake · with oil seal/ with protective lip · Key way shaft/ Round shaft

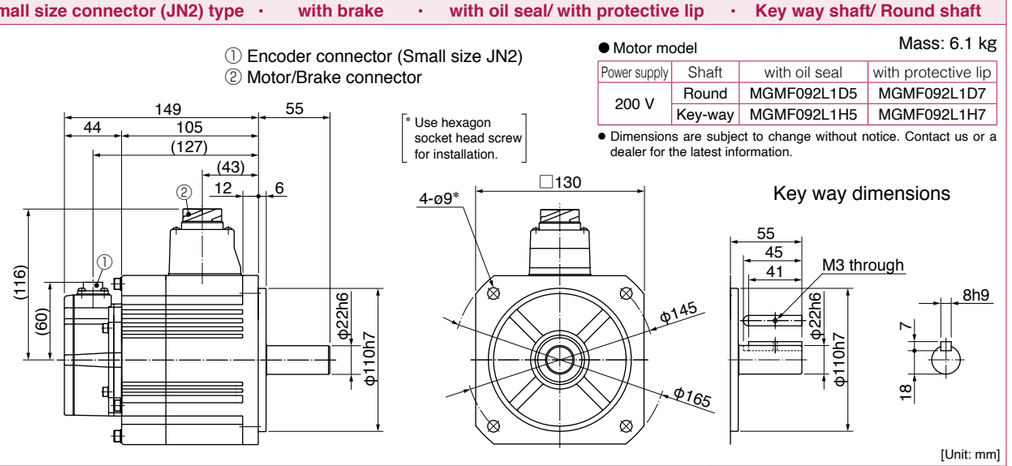

● Motor model — Mass: 6.1 kg

Power supply	Shaft	with oil seal	with protective lip
200 V	Round	MGMF092L1D5	MGMF092L1D7
	Key-way	MGMF092L1H5	MGMF092L1H7

● Dimensions are subject to change without notice. Contact us or a dealer for the latest information.

[Unit: mm]

* For motors specifications, refer to P.112.

MGMF 1.3 kW

Large size connector (JL10) type ・ without brake ・ with oil seal/ with protective lip ・ Key way shaft/ Round shaft

① Encoder connector (Large size JL10)
② Motor connector

Mass: 5.7 kg

● Motor model

Power supply	Shaft	with oil seal	with protective lip
200 V	Round	MGMF132L1C6	MGMF132L1C8
	Key-way	MGMF132L1G6	MGMF132L1G8

● Dimensions are subject to change without notice. Contact us or a dealer for the latest information.

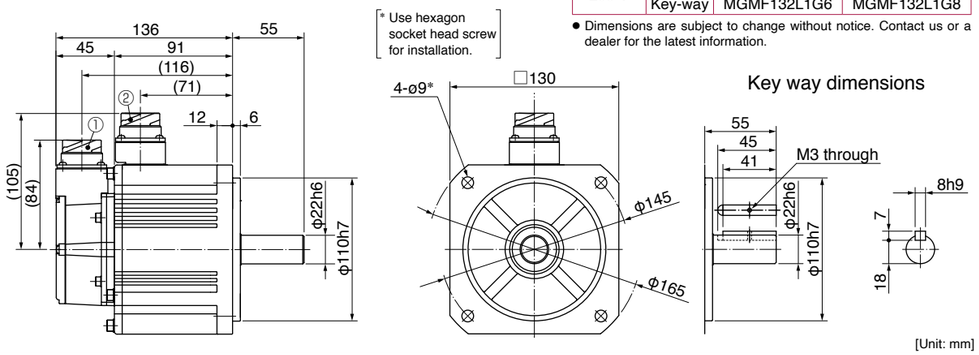

[Unit: mm]

Large size connector (JL10) type ・ with brake ・ with oil seal/ with protective lip ・ Key way shaft/ Round shaft

① Encoder connector (Large size JL10)
② Motor/Brake connector

Mass: 7.2 kg

● Motor model

Power supply	Shaft	with oil seal	with protective lip
200 V	Round	MGMF132L1D6	MGMF132L1D8
	Key-way	MGMF132L1H6	MGMF132L1H8

● Dimensions are subject to change without notice. Contact us or a dealer for the latest information.

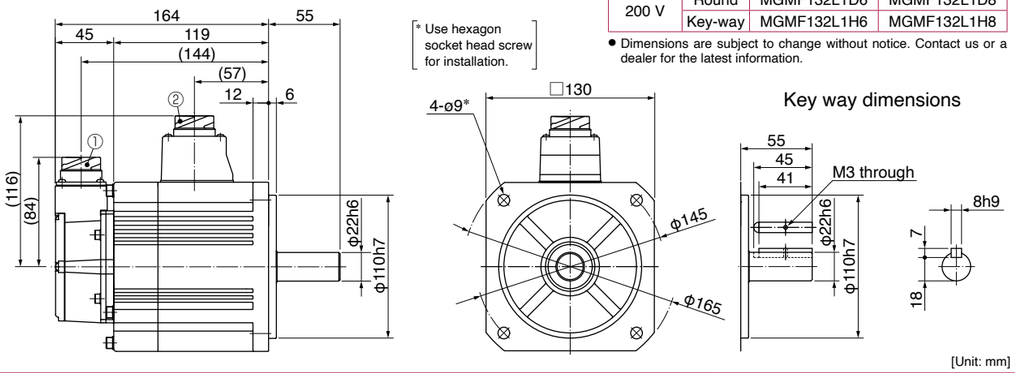

[Unit: mm]

Small size connector (JN2) type ・ without brake ・ with oil seal/ with protective lip ・ Key way shaft/ Round shaft

① Encoder connector (Small size JN2)
② Motor connector

Mass: 5.7 kg

● Motor model

Power supply	Shaft	with oil seal	with protective lip
200 V	Round	MGMF132L1C5	MGMF132L1C7
	Key-way	MGMF132L1G5	MGMF132L1G7

● Dimensions are subject to change without notice. Contact us or a dealer for the latest information.

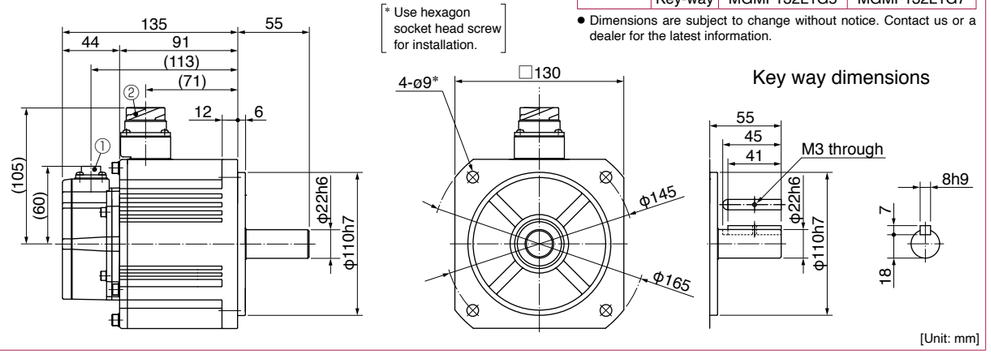

[Unit: mm]

* For motors specifications, refer to P.113.

MGMF 1.3 kW

Small size connector (JN2) type ・ with brake ・ with oil seal/ with protective lip ・ Key way shaft/ Round shaft

① Encoder connector (Small size JN2)
② Motor/Brake connector

Mass: 7.5 kg

● Motor model

Power supply	Shaft	with oil seal	with protective lip
200 V	Round	MGMF132L1D5	MGMF132L1D7
	Key-way	MGMF132L1H5	MGMF132L1H7

● Dimensions are subject to change without notice. Contact us or a dealer for the latest information.

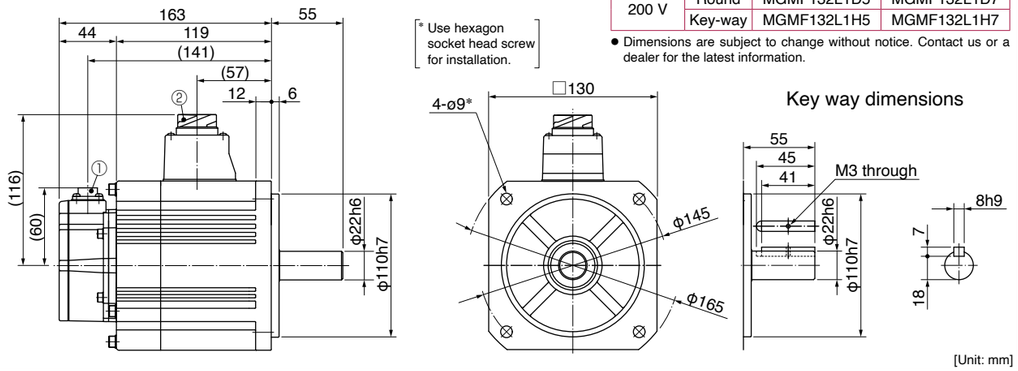

[Unit: mm]

MGMF 1.8 kW

Large size connector (JL10) type ・ without brake ・ with oil seal/ with protective lip ・ Key way shaft/ Round shaft

① Encoder connector (Large size JL10)
② Motor connector

Mass: 6.9 kg

● Motor model

Power supply	Shaft	with oil seal	with protective lip
200 V	Round	MGMF182L1C6	MGMF182L1C8
	Key-way	MGMF182L1G6	MGMF182L1G8

● Dimensions are subject to change without notice. Contact us or a dealer for the latest information.

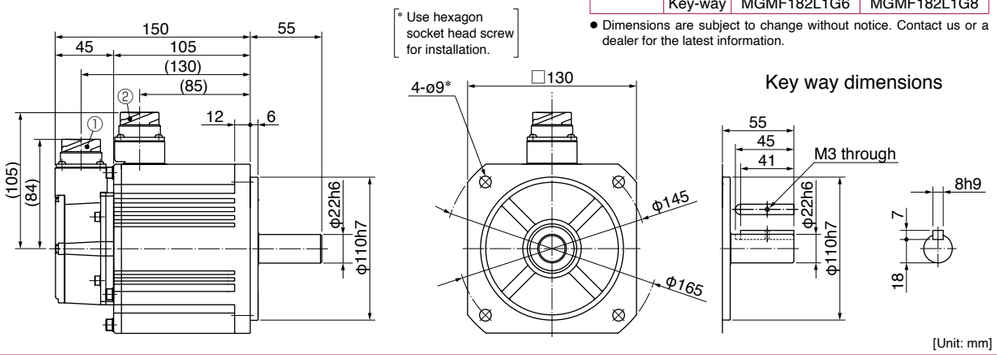

[Unit: mm]

Large size connector (JL10) type ・ with brake ・ with oil seal/ with protective lip ・ Key way shaft/ Round shaft

① Encoder connector (Large size JL10)
② Motor/Brake connector

Mass: 8.4 kg

● Motor model

Power supply	Shaft	with oil seal	with protective lip
200 V	Round	MGMF182L1D6	MGMF182L1D8
	Key-way	MGMF182L1H6	MGMF182L1H8

● Dimensions are subject to change without notice. Contact us or a dealer for the latest information.

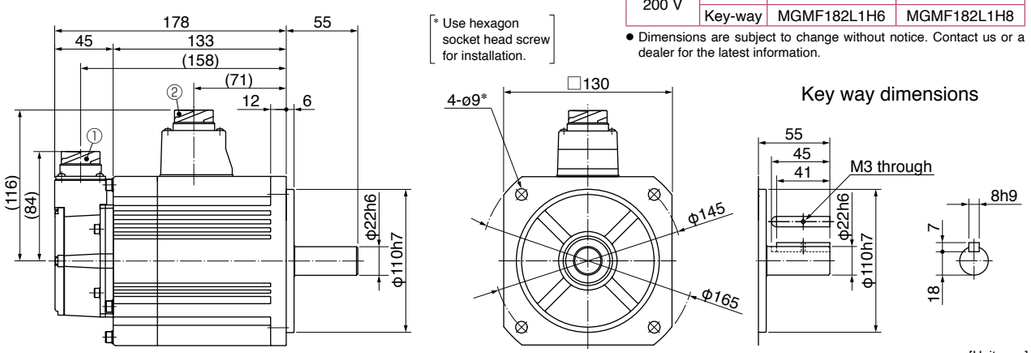

[Unit: mm]

* For motors specifications, refer to P.113, P.114.

MGMF 1.8 kW

Small size connector (JN2) type · without brake · with oil seal/ with protective lip · Key way shaft/ Round shaft

① Encoder connector (Small size JN2)
② Motor connector

Mass: 6.9 kg

● Motor model

Power supply	Shaft	with oil seal	with protective lip
200 V	Round	MGMF182L1C5	MGMF182L1C7
	Key-way	MGMF182L1G5	MGMF182L1G7

● Dimensions are subject to change without notice. Contact us or a dealer for the latest information.

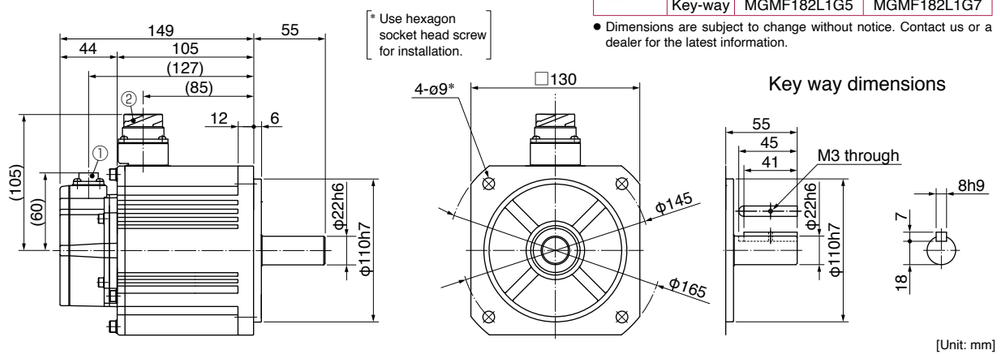

[Unit: mm]

Small size connector (JN2) type · with brake · with oil seal/ with protective lip · Key way shaft/ Round shaft

① Encoder connector (Small size JN2)
② Motor/Brake connector

Mass: 8.4 kg

● Motor model

Power supply	Shaft	with oil seal	with protective lip
200 V	Round	MGMF182L1D5	MGMF182L1D7
	Key-way	MGMF182L1H5	MGMF182L1H7

● Dimensions are subject to change without notice. Contact us or a dealer for the latest information.

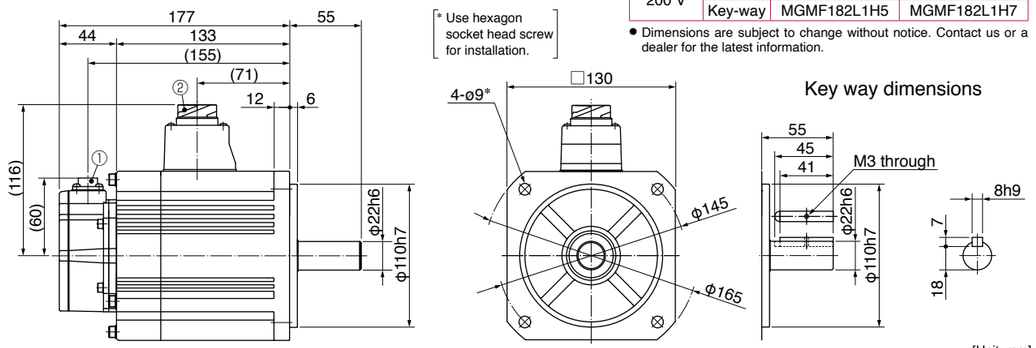

[Unit: mm]

MGMF 2.4 kW

Large size connector (JL10) type · without brake · with oil seal/ with protective lip · Key way shaft/ Round shaft

① Encoder connector (Large size JL10)
② Motor connector

Mass: 13.4 kg

● Motor model

Power supply	Shaft	with oil seal	with protective lip
200 V	Round	MGMF242L1C6	MGMF242L1C8
	Key-way	MGMF242L1G6	MGMF242L1G8

● Dimensions are subject to change without notice. Contact us or a dealer for the latest information.

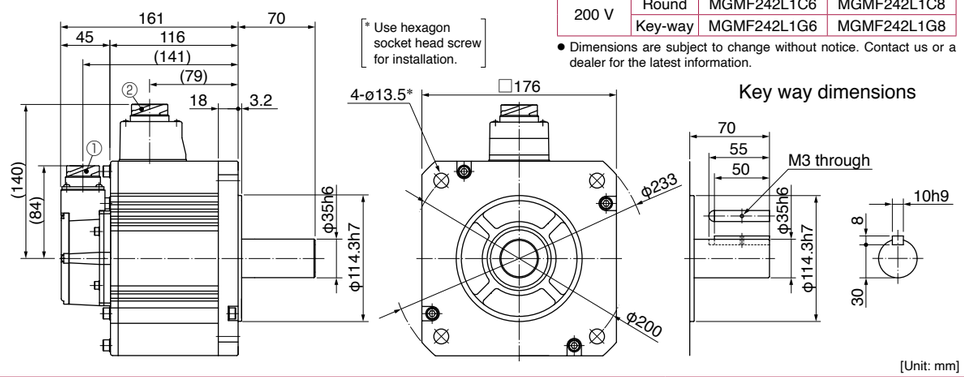

[Unit: mm]

* For motors specifications, refer to P.114, P.115.

MGMF 2.4 kW

Large size connector (JL10) type · with brake · with oil seal/ with protective lip · Key way shaft/ Round shaft

① Encoder connector (Large size JL10)
② Motor/Brake connector

Mass: 16.8 kg

● Motor model

Power supply	Shaft	with oil seal	with protective lip
200 V	Round	MGMF242L1D6	MGMF242L1D8
	Key-way	MGMF242L1H6	MGMF242L1H8

● Dimensions are subject to change without notice. Contact us or a dealer for the latest information.

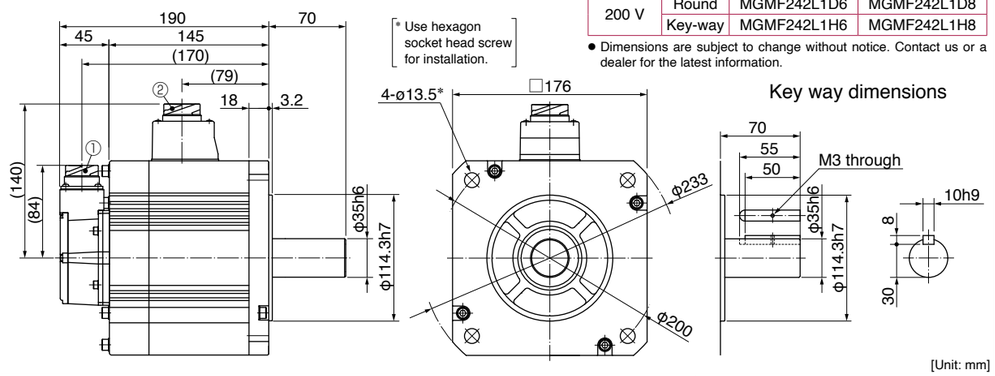

[Unit: mm]

Small size connector (JN2) type · without brake · with oil seal/ with protective lip · Key way shaft/ Round shaft

① Encoder connector (Small size JN2)
② Motor connector

Mass: 13.4 kg

● Motor model

Power supply	Shaft	with oil seal	with protective lip
200 V	Round	MGMF242L1C5	MGMF242L1C7
	Key-way	MGMF242L1G5	MGMF242L1G7

● Dimensions are subject to change without notice. Contact us or a dealer for the latest information.

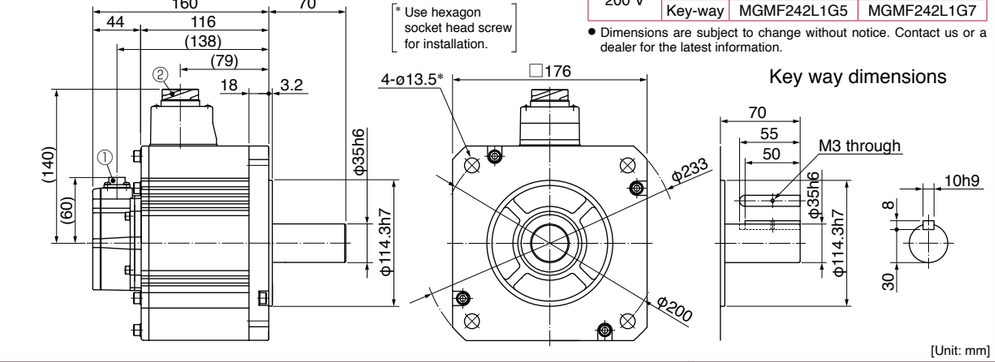

[Unit: mm]

Small size connector (JN2) type · with brake · with oil seal/ with protective lip · Key way shaft/ Round shaft

① Encoder connector (Small size JN2)
② Motor/Brake connector

Mass: 16.8 kg

● Motor model

Power supply	Shaft	with oil seal	with protective lip
200 V	Round	MGMF242L1D5	MGMF242L1D7
	Key-way	MGMF242L1H5	MGMF242L1H7

● Dimensions are subject to change without notice. Contact us or a dealer for the latest information.

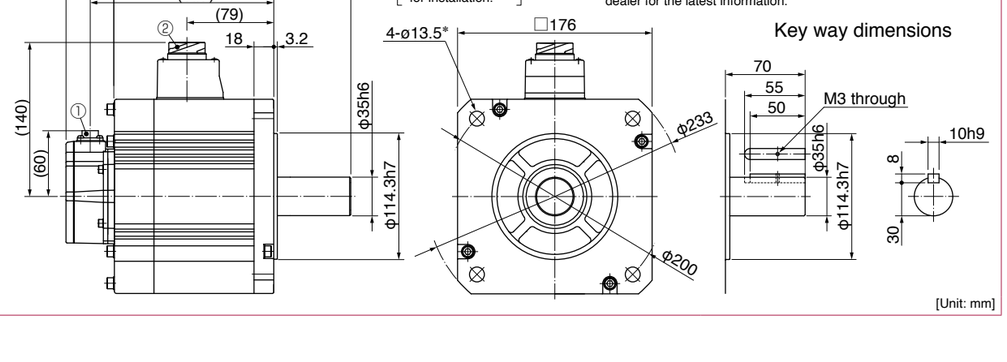

[Unit: mm]

* For motors specifications, refer to P.115.

MGMF 2.9 kW

Large size connector (JL10) type ・ without brake ・ with oil seal/ with protective lip ・ Key way shaft/ Round shaft

① Encoder connector (Large size JL10)
② Motor connector

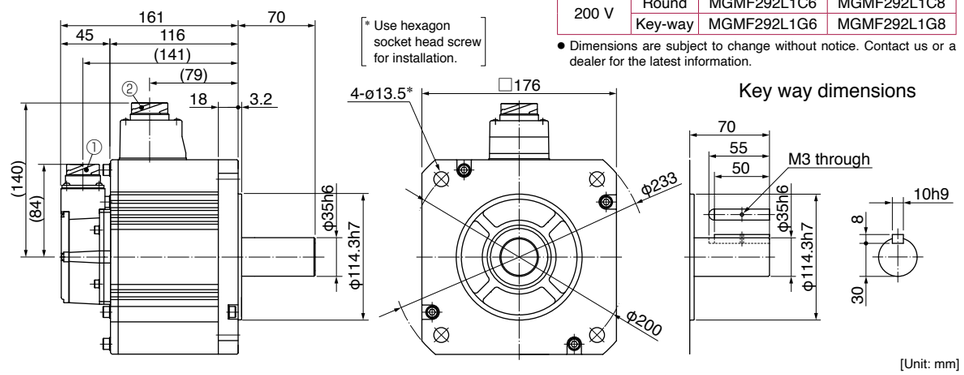

● Motor model

Mass: 13.4 kg

Power supply	Shaft	with oil seal	with protective lip
200 V	Round	MGMF292L1C6	MGMF292L1C8
	Key-way	MGMF292L1G6	MGMF292L1G8

● Dimensions are subject to change without notice. Contact us or a dealer for the latest information.

[Unit: mm]

Large size connector (JL10) type ・ with brake ・ with oil seal/ with protective lip ・ Key way shaft/ Round shaft

① Encoder connector (Large size JL10)
② Motor/Brake connector

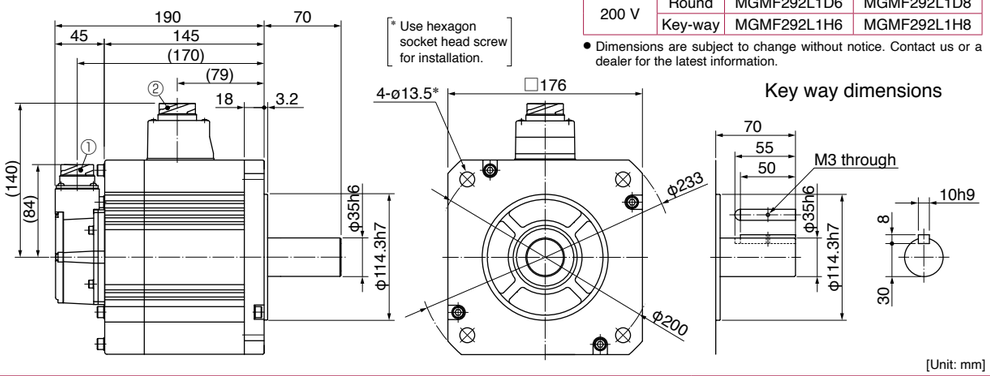

● Motor model

Mass: 16.8 kg

Power supply	Shaft	with oil seal	with protective lip
200 V	Round	MGMF292L1D6	MGMF292L1D8
	Key-way	MGMF292L1H6	MGMF292L1H8

● Dimensions are subject to change without notice. Contact us or a dealer for the latest information.

[Unit: mm]

Small size connector (JN2) type ・ without brake ・ with oil seal/ with protective lip ・ Key way shaft/ Round shaft

① Encoder connector (Small size JN2)
② Motor connector

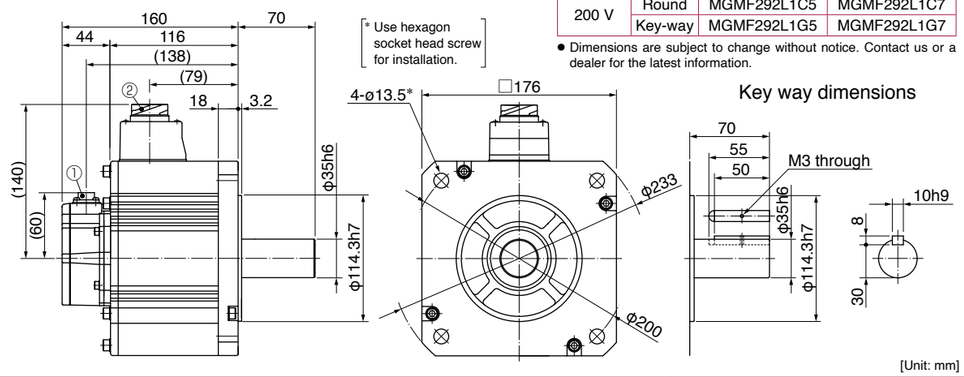

● Motor model

Mass: 13.4 kg

Power supply	Shaft	with oil seal	with protective lip
200 V	Round	MGMF292L1C5	MGMF292L1C7
	Key-way	MGMF292L1G5	MGMF292L1G7

● Dimensions are subject to change without notice. Contact us or a dealer for the latest information.

[Unit: mm]

* For motors specifications, refer to P.116.

MGMF 2.9 kW

Small size connector (JN2) type ・ with brake ・ with oil seal/ with protective lip ・ Key way shaft/ Round shaft

① Encoder connector (Small size JN2)
② Motor/Brake connector

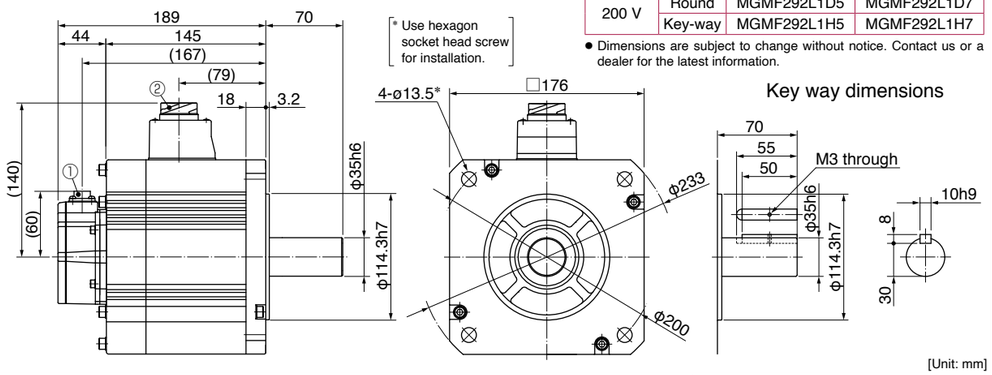

● Motor model

Mass: 16.8 kg

Power supply	Shaft	with oil seal	with protective lip
200 V	Round	MGMF292L1D5	MGMF292L1D7
	Key-way	MGMF292L1H5	MGMF292L1H7

● Dimensions are subject to change without notice. Contact us or a dealer for the latest information.

[Unit: mm]

MGMF 4.4 kW

Large size connector (JL10) type ・ without brake ・ with oil seal/ with protective lip ・ Key way shaft/ Round shaft

① Encoder connector (Large size JL10)
② Motor connector

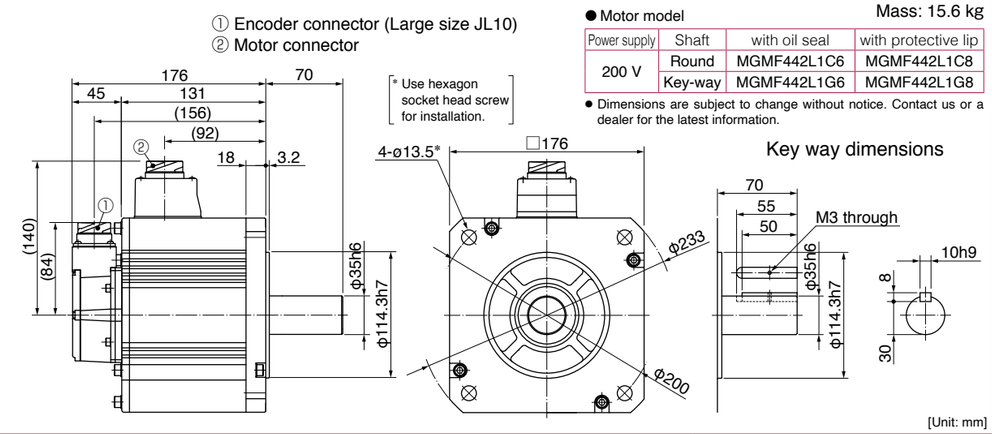

● Motor model

Mass: 15.6 kg

Power supply	Shaft	with oil seal	with protective lip
200 V	Round	MGMF442L1C6	MGMF442L1C8
	Key-way	MGMF442L1G6	MGMF442L1G8

● Dimensions are subject to change without notice. Contact us or a dealer for the latest information.

[Unit: mm]

Large size connector (JL10) type ・ with brake ・ with oil seal/ with protective lip ・ Key way shaft/ Round shaft

① Encoder connector (Large size JL10)
② Motor/Brake connector

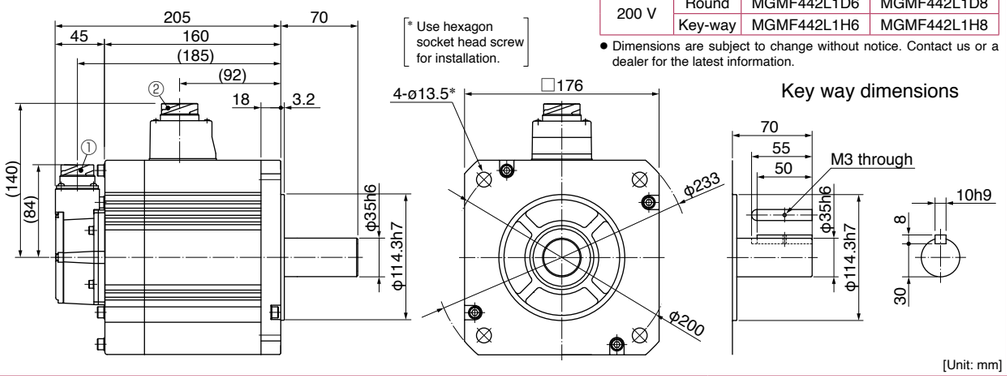

● Motor model

Mass: 19.0 kg

Power supply	Shaft	with oil seal	with protective lip
200 V	Round	MGMF442L1D6	MGMF442L1D8
	Key-way	MGMF442L1H6	MGMF442L1H8

● Dimensions are subject to change without notice. Contact us or a dealer for the latest information.

[Unit: mm]

* For motors specifications, refer to P.116, P.117.

MGMF 4.4 kW

Small size connector (JN2) type · without brake · with oil seal/ with protective lip · Key way shaft/ Round shaft

① Encoder connector (Small size JN2)
② Motor connector

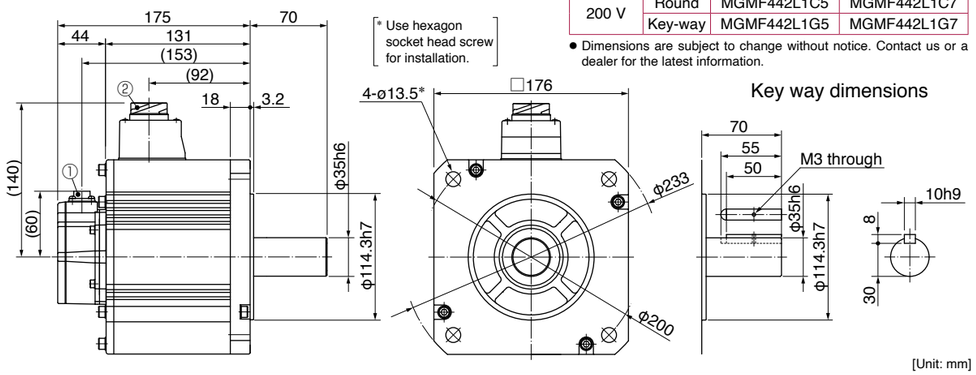

Key way dimensions

Mass: 15.6 kg

● Motor model

Power supply	Shaft	with oil seal	with protective lip
200 V	Round	MGMF442L1C5	MGMF442L1C7
	Key-way	MGMF442L1G5	MGMF442L1G7

* Use hexagon socket head screw for installation.

● Dimensions are subject to change without notice. Contact us or a dealer for the latest information.

[Unit: mm]

Small size connector (JN2) type · with brake · with oil seal/ with protective lip · Key way shaft/ Round shaft

① Encoder connector (Small size JN2)
② Motor/Brake connector

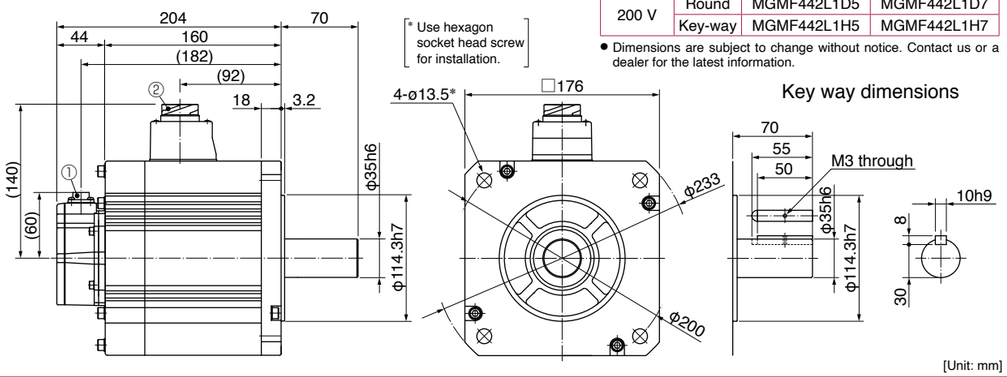

Key way dimensions

Mass: 19.0 kg

● Motor model

Power supply	Shaft	with oil seal	with protective lip
200 V	Round	MGMF442L1D5	MGMF442L1D7
	Key-way	MGMF442L1H5	MGMF442L1H7

* Use hexagon socket head screw for installation.

● Dimensions are subject to change without notice. Contact us or a dealer for the latest information.

[Unit: mm]

MGMF 5.5 kW

Large size connector (JL10) type · without brake · with oil seal · Key way shaft/ Round shaft

① Encoder connector (Large size JL10)
② Motor connector

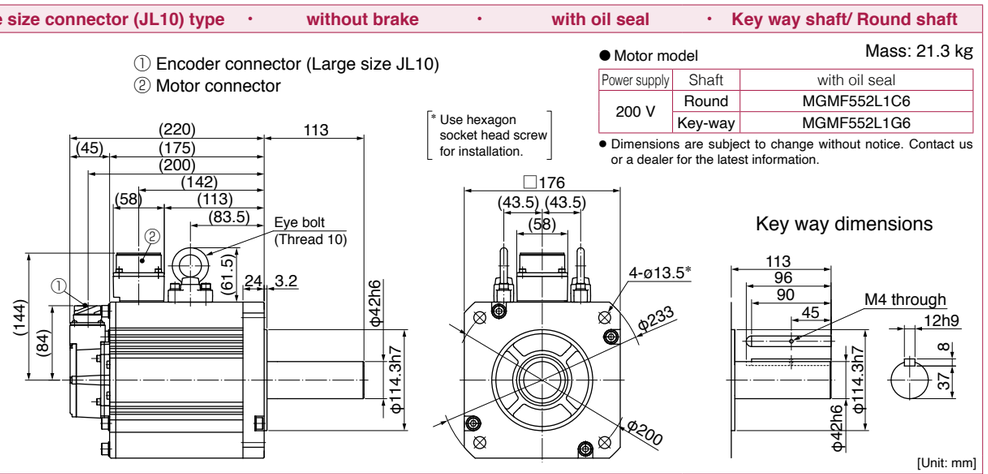

Key way dimensions

Mass: 21.3 kg

● Motor model

Power supply	Shaft	with oil seal
200 V	Round	MGMF552L1C6
	Key-way	MGMF552L1G6

* Use hexagon socket head screw for installation.

● Dimensions are subject to change without notice. Contact us or a dealer for the latest information.

[Unit: mm]

* For motors specifications, refer to P.117, P.118.

MGMF 5.5 kW

Large size connector (JL10) type · with brake · with oil seal · Key way shaft/ Round shaft

① Encoder connector (Large size JL10)
② Motor connector ③ Brake connector

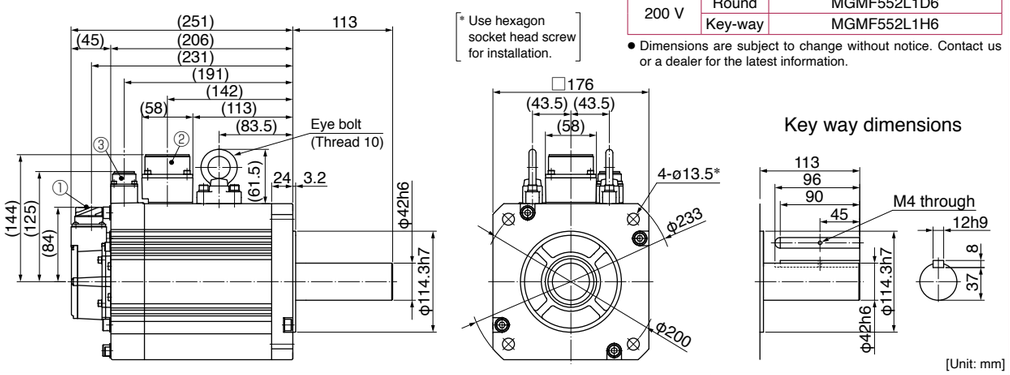

Key way dimensions

Mass: 25.4 kg

● Motor model

Power supply	Shaft	with oil seal
200 V	Round	MGMF552L1D6
	Key-way	MGMF552L1H6

* Use hexagon socket head screw for installation.

● Dimensions are subject to change without notice. Contact us or a dealer for the latest information.

[Unit: mm]

Small size connector (JN2) type · without brake · with oil seal · Key way shaft/ Round shaft

① Encoder connector (Small size JN2)
② Motor connector

Key way dimensions

Mass: 21.3 kg

● Motor model

Power supply	Shaft	with oil seal
200 V	Round	MGMF552L1C5
	Key-way	MGMF552L1G5

* Use hexagon socket head screw for installation.

● Dimensions are subject to change without notice. Contact us or a dealer for the latest information.

[Unit: mm]

Small size connector (JN2) type · with brake · with oil seal · Key way shaft/ Round shaft

① Encoder connector (Small size JN2)
② Motor connector ③ Brake connector

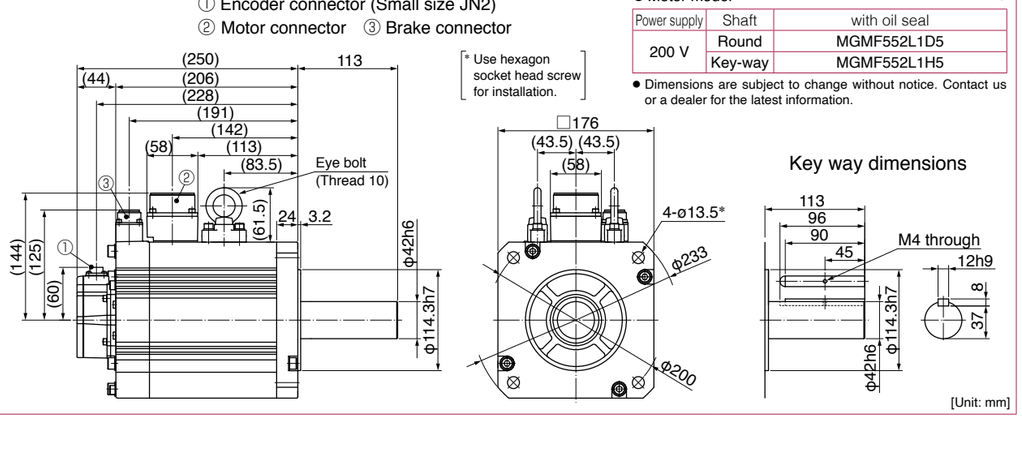

Key way dimensions

Mass: 25.4 kg

● Motor model

Power supply	Shaft	with oil seal
200 V	Round	MGMF552L1D5
	Key-way	MGMF552L1H5

* Use hexagon socket head screw for installation.

● Dimensions are subject to change without notice. Contact us or a dealer for the latest information.

[Unit: mm]

* For motors specifications, refer to P.118.

Features

- Line-up IP67 motor: 1.0 kW to 7.5 kW
- Max speed: 6500r/min (MHMF 50 W to 400 W)
- Low inertia (MSMF) to High inertia (MHMF).
- Low cogging torque: Rated torque ratio 0.5 % (typical value).
- 23-bit absolute encoder (8388608 pulse).

Motor Lineup

80 mm sq. or less



MSMF
Low inertia

Max. speed : 6000 r/min
Rated speed : 3000 r/min
Rated output :
50 W to 1000 W
Enclosure:
IP65: Leadwire type



MQMF
(Flat type)
Middle inertia

Max. speed : 6500 r/min
Rated speed : 3000 r/min
Rated output :
100 W to 400 W
Enclosure:
IP65: Leadwire type



MHMF
High inertia

Max. speed :
6500 r/min
6000 r/min (750 W,1000 W)
Rated speed : 3000 r/min
Rated output :
50 W to 1000 W
Enclosure:
IP65: Leadwire type

100 mm sq. or more



MSMF
Low inertia

Max. speed : 5000 r/min
4500 r/min (4.0 kW,5.0 kW)
Rated speed : 3000 r/min
Rated output : 1.0 kW to 5.0 kW
Enclosure : IP67



MDMF
Middle inertia

Max. speed : 3000 r/min
Rated speed : 2000 r/min
: 1500 r/min (7.5 kW)
Rated output : 1.0 kW to 7.5 kW
Enclosure : IP67



MGMF
(Low speed/ High torque type)
Middle inertia

Max. speed : 3000 r/min
Rated speed : 1500 r/min
Rated output : 0.85 kW to 5.5 kW
Enclosure : IP67



MHMF
High inertia

Max. speed : 3000 r/min
Rated speed : 2000 r/min
: 1500 r/min (7.5 kW)
Rated output : 1.0 kW to 7.5 kW
Enclosure : IP67

Special Order Product Motor Contents

MSMF (200 V)
50 W to 5.0 kW P.211

MQMF (200 V)
100 W to 400 W P.223

MHMF (200 V)
50 W to 7.5 kW P.226

MDMF (200 V)
1.0 kW to 7.5 kW..... P.239

MGMF (200 V)
0.85 kW to 5.5 kW P.246

Dimensions
MSMF
(50 W to 1000 W).....P.253
MSMF
(1.0 kW to 5.0 kW).....P.257
MQMF
(100 W to 400 W).....P.261
MHMF
(50 W to 1000 W).....P.267
MHMF
(1.0 kW to 7.5 kW).....P.279
MDMF
(1.0 kW to 7.5 kW).....P.283
MGMF
(0.85 kW to 5.5kW).....P.288

Motor Specification Description
Environmental Conditions P.303
Notes on [Motor specification] page P.303
Permissible Load at Output Shaft P.304
Built-in Holding Brake P.305

<Cautions> Please avoid the motor, or equipment containing the motor to be distributed to Japan, or other regions through Japan.

Refer to P.205 to P.210 for motor and driver combinations. * For combination of elements of model number, refer to Index P.448.

Servo Motor "Oil seal with protective lip" option is not available for motors above 7.5 kW.

M	S	M	F	5	A	Z	L	1	A	2	*	— Special specifications
①			②	③		④	⑤	⑥	⑦			

① Type

Symbol	Type
MSM	Low inertia (50 W to 5.0 kW)
MQM	Middle inertia (100 W to 400 W)
MDM	Middle inertia (1.0 kW to 7.5 kW)
MGM	Middle inertia (0.85 kW to 5.5 kW)
MHM	High inertia (50 W to 7.5 kW)

② Series

Symbol	Series name
F	A6 Family

③ Motor rated output

Symbol	Rated output	Symbol	Rated output
5A	50 W	18	1.8 kW
01	100 W	20	2.0 kW
02	200 W	24	2.4 kW
04	400 W	29	2.9 kW
08	750 W	30	3.0 kW
09	0.85 kW, (130 mm sq.) 1000 W (80 mm sq.)	40	4.0 kW
		44	4.4 kW
10	1.0 kW	50	5.0 kW
13	1.3 kW	55	5.5 kW
15	1.5 kW	75	7.5 kW

④ Voltage specifications

Symbol	Specifications
2	200 V
Z	100 V/200 V common (50 W only)

⑤ Rotary encoder specifications

Symbol	Format	Pulse counts	Resolution	Wires
L	Absolute	23-bit	8388608	5

<Note>
When using a rotary encoder as an incremental system (not using multi-turn data), do not connect a battery for absolute encoder.

⑥ Design order

Symbol	Specifications
1	Standard

⑦ Motor specifications: 80 mm sq. or less Leadwire type IP65 MSMF 50 W to 1000 W

Symbol		Shaft		Holding brake		Oil seal	
		Round	Key-way, center tap	without	with	without	with
A	2	●		●		●	
B	2	●			●	●	
C	2	●		●			●
D	2	●			●		●
S	2		●	●		●	
T	2		●		●	●	
U	2		●	●			●
V	2		●		●		●

⑦ Motor specifications: 80 mm sq. or less Leadwire type IP65 MHMF 50 W to 1000 W, MQMF 100 W to 400 W

Symbol		Shaft		Holding brake		Oil seal		
		Round	Key-way, center tap	without	with	without	with	With protective lip
A	2	●		●		●		
B	2	●			●	●		
C	2	●		●			●	
C	4	●		●				●
D	2	●			●		●	
D	4	●			●			●
S	2		●	●		●		
T	2		●		●	●		
U	2		●	●			●	
U	4		●	●				●
V	2		●		●		●	
V	4		●		●			●

⑦ Motor specifications: 100 mm sq. or more Encoder connector : JL10 IP67 MSMF, MHMF, MDMF, MGMF

Symbol		Shaft		Holding brake		Oil seal	
		Round	Key-way	without	with	with	With protective lip
C	6	●		●		●	
C	8	●		●			●
D	6	●			●	●	
D	8	●			●		●
G	6		●	●		●	
G	8		●	●			●
H	6		●		●	●	
H	8		●		●		●

* Encoder connector JL10: Also applicable to screwed type

Servo Driver "Basic" and "RS485 communication" types are not available for G-Frame drivers.

M	A	D	L	N	1	5	S	E	*	*	*	— Special specifications
①			②	③	④	⑤	⑥	⑦				

① Frame symbol

Symbol	Frame	Symbol	Frame
MAD	A-Frame	MED	E-Frame
MBD	B-Frame	MFD	F-Frame
MCD	C-Frame	MGD	G-Frame
MDD	D-Frame		

② Series

Symbol	Series name
L	A6 Family

③ Safety Function

Symbol	Specifications
N	without the safety function
T	with the safety function

④ Max. current rating

Symbol	Current rating	Symbol	Current rating
0	6 A	8	60 A
1	8 A	9	80 A
2	12 A	A	100 A
3	22 A	B	120 A
4	24 A	C	160 A
5	40 A		

⑤ Supply voltage specifications

Symbol	Specifications
3	3-phase 200 V
5	Single/3-phase 200 V

⑥ I/f specifications

Symbol (specification)
S (Analog/Pulse)

⑦ Classification of type

Symbol	Specification
E	Basic type (Pulse train only)
F	Multi fanction type (Pulse, analog, full-closed)
G	RS485 communication type (Pulse train only)

Table of Part Numbers and Options: 80 mm sq. or less 50 W to 1000 W

Motor					Driver			Power capacity (at rated load) (kVA)		Optional parts						
Motor series		Power supply	Output (W)	Part No. Note)1	Rating/ Spec. Dimensions (page)	A6SF series Multi function type (Pulse, analog, full-closed)	A6 G series RS485 communication / A6 SE series Basic (Pulse signal input) Note)2, Note)4	Frame		Encoder Cable Note)3		Motor Cable Note)3		Brake Cable Note)3	External Regenerative Resistor	Reactor (Single phase / 3-phase)	Noise Filter (Single phase / 3-phase)
										23-bit Absolute		without Brake	with Brake				
										Use in the absolute system (with battery box) Note)5	Use in the Incremental system (without battery box)						
										Fixed cable		Movable cable		Movable cable			
Low inertia	MSMF (Leadwire type) 3000 r/min IP65	Single phase/ 3-phase 200 V	50	MSMF5AZL1 □ 2M	211 253	MADLT05SF	MADLN05S◇	A-frame ★	Approx. 0.5	MFECA 0＊＊0EAE (For fixed)	MFECA 0＊＊0EAD (For fixed)	MFMCA 0＊＊0EED		MFMCB 0＊＊0GET Note)6	DV0P4281	DV0P227 / DV0P220	DV0P4170 / DV0PM20042
			100	MSMF012L1 □ 2M	212 253	MADLT05SF	MADLN05S◇										
			200	MSMF022L1 □ 2M	213 254	MADLT15SF	MADLN15S◇								DV0P4283		
			400	MSMF042L1 □ 2M	214 255	MBDLT25SF	MBDLN25S◇	B-frame ★	Approx. 0.9							DV0P228 / DV0P220	
			750	MSMF082L1 □ 2M	215 255	MCDLT35SF	MCDLN35S◇	C-frame	Approx. 1.8								DV0PM20042
			1000	MSMF092L1 □ 2M	216 256	MDDLT45SF	MDDLN45S◇	D-frame	Approx. 2.4						DV0P4284	DV0P228 / DV0P222	DV0P4220
Middle inertia Flat type	MQMF (Leadwire type) 3000 r/min IP65	Single phase/ 3-phase 200 V	100	MQMF012L1 □ 2M MQMF012L1 □ 4M	223 261	MADLT05SF	MADLN05S◇	A-frame ★	Approx. 0.5	MFECA 0＊＊0EAE (For fixed)	MFECA 0＊＊0EAD (For fixed)	MFMCA 0＊＊0EED		MFMCB 0＊＊0GET Note)6	DV0P4281	DV0P227 / DV0P220	DV0P4170 / DV0PM20042
			200	MQMF022L1 □ 2M MQMF022L1 □ 4M	224 263	MADLT15SF	MADLN15S◇								DV0P4283		
			400	MQMF042L1 □ 2M MQMF042L1 □ 4M	225 265	MBDLT25SF	MBDLN25S◇	B-frame ★	Approx. 0.9							DV0P228 / DV0P220	
High inertia	MHMF (Leadwire type) 3000 r/min IP65	Single phase/ 3-phase 200 V	50	MHMF5AZL1 □ 2M MHMF5AZL1 □ 4M	226 267	MADLT05SF	MADLN05S◇	A-frame ★	Approx. 0.5	MFECA 0＊＊0EAE (For fixed)	MFECA 0＊＊0EAD (For fixed)	MFMCA 0＊＊0EED		MFMCB 0＊＊0GET Note)6	DV0P4281	DV0P227 / DV0P220	DV0P4170 / DV0PM20042
			100	MHMF012L1 □ 2M MHMF012L1 □ 4M	227 269	MADLT05SF	MADLN05S◇								DV0P4283		
			200	MHMF022L1 □ 2M MHMF022L1 □ 4M	228 271	MADLT15SF	MADLN15S◇										
			400	MHMF042L1 □ 2M MHMF042L1 □ 4M	229 273	MBDLT25SF	MBDLN25S◇	B-frame ★	Approx. 0.9							DV0P228 / DV0P220	
			750	MHMF082L1 □ 2M MHMF082L1 □ 4M	230 275	MCDLT35SF	MCDLN35S◇	C-frame	Approx. 1.8								DV0PM20042
			1000	MHMF092L1 □ 2M MHMF092L1 □ 4M	231 277	MDDLT55SF	MDDLN55S◇	D-frame	Approx. 2.4						DV0P4284	DV0P228 / DV0P222	DV0P4220

★: Frame-A and B drivers are not equipped with regenerative resistors.When regeneration occurs, please prepare an optional external regenerative resistor.

Note)1 □ : Represents the motor specifications. (refer to “Model designation” P.204.)

Note)2 ◇ : Represents the driver specifications. (refer to “Model designation” P.204.)

Note)3 ＊＊ : Represents the cable length (03/3 m, 05/5 m, 10/10 m, 20/20 m). Example. 3 m/MFECA0030EAE

Note)4 Because A6SE series driver (dedicated for position control) does not support the absolute system specification, only incremental system can be used in combination.

Note)5 Please note that a battery is not supplied together with 23-bit absolute encoder cable (with battery box). Please buy the battery part number “DV0P2990” separately.

Note)6 Brake cable and motor cable are required for the motor with brake.

Table of Part Numbers and Options: 100 mm sq. or more 0.85 kW to 5.0 kW

IP67 motor Encoder connector (Large size JL10) type

Motor						Driver			Power capacity (at rated load) (kVA)		Optional parts ▶ refer to P.306						
Motor series		Power supply	Output (W)	Part No. Note)1	Rating/ Spec. Dimensions (page)	A6 SF series Multi function type (Pulse, analog, full-closed)	A6 SG series RS485 communication / A6 SE series Basic (Pulse signal input) Note)2, Note)4	Frame			Encoder Cable Note)3,5 JL10 (Large size) (One-touch lock type / N/MS screwed type)		Motor Cable Note)3,5 JL10 (One-touch lock type / JL04 screwed type)		External Regenerative Resistor	Reactor (Single phase / 3-phase)	Noise Filter
											23-bit Absolute						
											Use in the absolute system (with battery box) Note)7	Use in the Incremental system (without battery box)	without Brake	with Brake			
											Fixed cable		Movable cable				
Low inertia	MSMF Large size JL10 type 3000 r/min IP67	Single phase/ 3-phase 200 V	1000	MSMF102L1 □ 6M MSMF102L1 □ 8M	217 257	MDDLT55SF	MDDLN55S◇	D-frame	Approx.	2.4	MFECA 0＊＊0EPE / MFECA 0＊＊0ESE	MFECA 0＊＊0EPD / MFECA 0＊＊0ESD	MFMCD 0＊＊2EUD / MFMCD 0＊＊2ECD	MFMCA 0＊＊2FUD / MFMCA 0＊＊2FCD	DV0P4284	DV0P228 / DV0P222	DV0P4220
			1500	MSMF152L1 □ 6M MSMF152L1 □ 8M	218 257	MDDLT55SF	MDDLN55S◇		Approx.	2.9						DV0PM20047 / DV0P222	
		3-phase 200 V	2000	MSMF202L1 □ 6M MSMF202L1 □ 8M	219 258	MEDLT83SF	MEDLN83S◇	E-frame	Approx.	3.8					DV0P4285 Note)6	DV0P223	DV0PM20043
			3000	MSMF302L1 □ 6M MSMF302L1 □ 8M	220 259	MFDLTA3SF	MFDLNA3S◇	F-frame	Approx.	5.2			MFMCA 0＊＊3EUT / MFMCA 0＊＊3ECT	MFMCA 0＊＊3FUT / MFMCA 0＊＊3FCT	DV0P4285 ×2 in parallel	DV0P224	DV0P3410
			4000	MSMF402L1 □ 6M MSMF402L1 □ 8M	221 259	MFDLTB3SF	MFDLNB3S◇		Approx.	6.5						DV0P225	
			5000	MSMF502L1 □ 6M MSMF502L1 □ 8M	222 260	MFDLTB3SF	MFDLNB3S◇		Approx.	7.8							
Middle inertia	MDMF Large size JL10 type 2000 r/min IP67	Single phase/ 3-phase 200 V	1000	MDMF102L1 □ 6M MDMF102L1 □ 8M	239 283	MDDLT45SF	MDDLN45S◇	D-frame	Approx.	2.4	MFECA 0＊＊0EPE / MFECA 0＊＊0ESE	MFECA 0＊＊0EPD / MFECA 0＊＊0ESD	MFMCD 0＊＊2EUD / MFMCD 0＊＊2ECD	MFMCA 0＊＊2FUD / MFMCA 0＊＊2FCD	DV0P4284	DV0P228 / DV0P222	DV0P4220
			1500	MDMF152L1 □ 6M MDMF152L1 □ 8M	240 284	MDDLT55SF	MDDLN55S◇		Approx.	2.9						DV0PM20047 / DV0P222	
		3-phase 200 V	2000	MDMF202L1 □ 6M MDMF202L1 □ 8M	241 285	MEDLT83SF	MEDLN83S◇	E-frame	Approx.	3.8					DV0P4285 Note)6	DV0P223	DV0PM20043
			3000	MDMF302L1 □ 6M MDMF302L1 □ 8M	242 285	MFDLTA3SF	MFDLNA3S◇	F-frame	Approx.	5.2			MFMCA 0＊＊3EUT / MFMCA 0＊＊3ECT	MFMCA 0＊＊3FUT / MFMCA 0＊＊3FCT	DV0P4285 ×2 in parallel	DV0P224	DV0P3410
			4000	MDMF402L1 □ 6M MDMF402L1 □ 8M	243 286	MFDLTB3SF	MFDLNB3S◇		Approx.	6.5						DV0P225	
			5000	MDMF502L1 □ 6M MDMF502L1 □ 8M	245 287	MFDLTB3SF	MFDLNB3S◇		Approx.	7.8							
	MGMF Large size JL10 type (Low speed/ High torque type) 1500 r/min IP67	Single phase/ 3-phase 200 V	850	MGMF092L1 □ 6M MGMF092L1 □ 8M	246 288	MDDLT45SF	MDDLN45S◇	D-frame	Approx.	2.0	MFECA 0＊＊0EPE / MFECA 0＊＊0ESE	MFECA 0＊＊0EPD / MFECA 0＊＊0ESD	MFMCD 0＊＊2EUD / MFMCD 0＊＊2ECD	MFMCA 0＊＊2FUD / MFMCA 0＊＊2FCD	DV0P4284	DV0P228 / DV0P221	DV0P4220
			1300	MGMF132L1 □ 6M MGMF132L1 □ 8M	247 289	MDDLT55SF	MDDLN55S◇		Approx.	2.6						DV0PM20047 / DV0P222	
		3-phase 200 V	1800	MGMF182L1 □ 6M MGMF182L1 □ 8M	248 289	MEDLT83SF	MEDLN83S◇	E-frame	Approx.	3.4					DV0P4285	DV0P223	DV0PM20043
			2400	MGMF242L1 □ 6M MGMF242L1 □ 8M	249 290	MEDLT93SF	MEDLN93S◇		Approx.	4.5			MFMCE 0＊＊3EUT / MFMCE 0＊＊3ECT	MFMCD 0＊＊3FUT / MFMCD 0＊＊3FCT		DV0P224	
			2900	MGMF292L1 □ 6M MGMF292L1 □ 8M	250 291	MFDLTB3SF	MFDLNB3S◇	F-frame	Approx.	5.0			MFMCA 0＊＊3EUT / MFMCA 0＊＊3ECT	MFMCA 0＊＊3FUT / MFMCA 0＊＊3FCT	DV0P4285 ×2 in parallel		DV0P3410
			4400	MGMF442L1 □ 6M MGMF442L1 □ 8M	251 291	MFDLTB3SF	MFDLNB3S◇		Approx.	7.0						DV0P225	
High inertia	MHMF Large size JL10 type 2000 r/min IP67	Single phase/ 3-phase 200 V	1000	MHMF102L1 □ 6M MHMF102L1 □ 8M	232 279	MDDLT45SF	MDDLN45S◇	D-frame	Approx.	2.4	MFECA 0＊＊0EPE / MFECA 0＊＊0ESE	MFECA 0＊＊0EPD / MFECA 0＊＊0ESD	MFMCD 0＊＊2EUD / MFMCD 0＊＊2ECD	MFMCA 0＊＊2FUD / MFMCA 0＊＊2FCD	DV0P4284	DV0P228 / DV0P222	DV0P4220
			1500	MHMF152L1 □ 6M MHMF152L1 □ 8M	233 279	MDDLT55SF	MDDLN55S◇		Approx.	2.9						DV0PM20047 / DV0P222	
		3-phase 200 V	2000	MHMF202L1 □ 6M MHMF202L1 □ 8M	234 280	MEDLT83SF	MEDLN83S◇	E-frame	Approx.	3.8			MFMCE 0＊＊2EUD / MFMCE 0＊＊2ECD	MFMCE 0＊＊2FUD / MFMCE 0＊＊2FCD	DV0P4285 Note)6	DV0P223	DV0PM20043
			3000	MHMF302L1 □ 6M MHMF302L1 □ 8M	235 281	MFDLTA3SF	MFDLNA3S◇	F-frame	Approx.	5.2			MFMCA 0＊＊3EUT / MFMCA 0＊＊3ECT	MFMCA 0＊＊3FUT / MFMCA 0＊＊3FCT	DV0P4285 ×2 in parallel	DV0P224	DV0P3410
			4000	MHMF402L1 □ 6M MHMF402L1 □ 8M	236 281	MFDLTB3SF	MFDLNB3S◇		Approx.	6.5						DV0P225	
			5000	MHMF502L1 □ 6M MHMF502L1 □ 8M	237 282	MFDLTB3SF	MFDLNB3S◇		Approx.	7.8							

Note)1 □ : Represents the motor specifications. (refer to “Model designation” P.204.)

Note)2 ◇ : Represents the driver specifications. (refer to “Model designation” P.204.)

Note)3 ＊＊ : Represents the cable length (03/3 m, 05/5 m, 10/10 m, 20/20 m). Example. 3 m/MFECA0030EPE

Note)4 Because A6SE series driver (dedicated for position control) does not support the absolute system specification, only incremental system can be used in combination.

Note)5 Use of JL10 type encoder cables and motor cables enable one-touch lock connections. Conventional screwed type N/MS and JL04V type cables can also be used.

Note)6 For other possible combinations, refer to P.343.

Note)7 Please note that a battery is not supplied together with 23-bit absolute encoder cable (with battery box). Please buy the battery part number “DV0P2990” separately.

Table of Part Numbers and Options: 176 mm sq. or more 5.5 kW to 7.5 kW

IP67 motor Encoder connector (Large size JL10) type

Motor						Driver					Optional parts ▶ refer to P.306					
Motor series		Power supply	Output (W)	Part No. Note)1	Rating/ Spec. Dimensions (page)	A6SF series Multi function type (Pulse, analog, full-closed)	A6SG series RS485 communication / A6SE series Basic (Pulse signal input)	Frame	Power capacity (at rated load) (kVA)		Encoder Cable Note)2,3		Motor Cable		External Regenerative Resistor	Reactor (Single phase / 3-phase)	Noise Filter
											JL10 (Large size) (One-touch lock type / N/MS screwed type)		Note)6				
											23-bit Absolute						
											Use in the absolute system (with battery box) Note)4	Use in the Incremental system (without battery box)	without Brake	with Brake			
											Fixed cable						
Middle inertia	MDMF Large size JL10 type 1500 r/min IP67	3-phase 200 V	7500	MDMF752L1 □ 6M	245 287	MGDLTC3SF	—	G-frame	Approx. 11		MFECA 0＊＊0EPE / MFECA 0＊＊0ESE	MFECA 0＊＊0EPD / MFECA 0＊＊0ESD	Note)6	Note)6	DV0P4285 ×3 in parallel	— Note)5	HF3080C-SZA (Recommended components) P.413
	MGMF Large size JL10 type (Low speed/High torque type) 1500 r/min IP67	3-phase 200 V	5500	MGMF552L1 □ 6M	252 292	MGDLTC3SF	—	G-frame	Approx. 8.5		MFECA 0＊＊0EPE / MFECA 0＊＊0ESE	MFECA 0＊＊0EPD / MFECA 0＊＊0ESD	Note)6	Note)6		— Note)5	HF3080C-SZA (Recommended components) P.413
High inertia	MHMF Large size JL10 type 1500 r/min IP67	3-phase 200 V	7500	MHMF752L1 □ 6M	238 283	MGDLTC3SF	—	G-frame	Approx. 11		MFECA 0＊＊0EPE / MFECA 0＊＊0ESE	MFECA 0＊＊0EPD / MFECA 0＊＊0ESD	Note)6	Note)6	DV0P4285 ×3 in parallel	— Note)5	HF3080C-SZA (Recommended components) P.413

■ About dynamic brake

G frame is built in / external, H frame is external

Built-in / {external} The standard of the dynamic brake resistance's capability is up to three consecutive emergency stops from the rated speed at the maximum allowable inertia (load inertia moment ratio 10 times the rotor inertia moment). If it is used under more conditions, the resistance may be broken and the dynamic brake may not operate.

Recommended resistance: 1.2 Ω 400 W or more × 3 pieces

For inquiries: Iwaki Musen Kenkyusho Co.,Ltd. Tel: +81-44-833-4311

■ Connector kit (option) Component parts Note)6

Motor	Driver		Option No. Connector Kit for motor, encoder connection	Encoder Cable		Motor Cable		Brake Cable	
	Frame	Connection terminal		Motor side	Driver side	Motor side	Driver side	Motor side	Power supply for brake
MDMF 7.5 kW MGMF 5.5 kW MHMF 7.5 kW	G	M5	DV0PM20107	Large size connector One-touch lock type	For Connector X6	Connector Screwed type	(to be supplied by customer) M5 Round terminal	not included	(to be supplied by customer)
			DV0PM20108					Connector Screwed type	
			DV0PM20111	Large size connector Screwed type				not included	
			DV0PM20112					Connector Screwed type	

Note)1 □ : Represents the motor specifications. (refer to “Model designation” P.204.)

Note)2 ＊＊ : Represents the cable length (03/3 m, 05/5 m, 10/10 m, 20/20 m). Example. 3 m/MFECA0030ETE

Note)3 Use of JL10 type encoder cables and motor cables enable one-touch lock connections. Conventional screwed type N/MS and JL04V type cables can also be used.

Note)4 Please note that a battery is not supplied together with 23-bit absolute encoder cable (with battery box). Please buy the battery part number “DV0P2990” separately.

Note)5 Please prepare reactor for customer.

Note)6 We recommend purchasing an optional connector kit.

Special Order Product | 200 V **MSMF 50 W** [Low inertia 38 mm sq.] IP65

• Please contact us for more information.

Specifications

			AC200 V
Motor model *1			MSMF5AZL1□□M
Applicable driver	Model No.	Multifunction type	MADLT05SF
		RS485 communication type *2	MADLN05SG
		Basic type *2	MADLN05SE
	Frame symbol		A-frame
Power supply capacity		(kVA)	0.5
Rated output		(W)	50
Rated torque		(N·m)	0.16
Continuous stall torque		(N·m)	0.16
Momentary Max. peak torque		(N·m)	0.48
Rated current		(A(rms))	1.1
Max. current		(A(o-p))	4.7
Regenerative brake frequency (times/min) Note)1	Without option		No limit Note)2
	DV0P4281		No limit Note)2
Rated rotational speed		(r/min)	3000
Max. rotational speed		(r/min)	6000
Moment of inertia of rotor ($\times 10^{-4}$ kg·m^2)	Without brake		0.026
	With brake		0.029
Recommended moment of inertia ratio of the load and the rotor Note)3			30 times or less
Rotary encoder specifications *3			23-bit Absolute
	Resolution per single turn		8388608

- **Brake specifications** (For details, refer to P.305)

(This brake will be released when it is energized. Do not use this for braking the motor in motion.)

Static friction torque (N·m)	0.294 or more
Engaging time (ms)	35 or less
Releasing time (ms) Note)4	20 or less
Exciting current (DC) (A)	0.30
Releasing voltage (DC) (V)	1 or more
Exciting voltage (DC) (V)	24±1.2

- **Permissible load** (For details, refer to P.304)

During assembly	Radial load P-direction (N)	147
	Thrust load A-direction (N)	88.0
	Thrust load B-direction (N)	117.6
During operation	Radial load P-direction (N)	68.6
	Thrust load A, B-direction (N)	58.8

• For details of Note)1 to Note)4, refer to P.303.
• Dimensions of Driver, refer to P.57.
*1 □□ in the motor part number represents the motor specifications.
*2 Basic type and RS485 communication type are "Position control type".
Detail of model designation, refer to P.204.
*3 When using a rotary encoder as an incremental system (not using multi-turn data), do not connect a battery for absolute encoder.

Torque characteristics (at AC200 V of power voltage <Dotted line represents the torque at 10 % less supply voltage.>)

Without oil seal

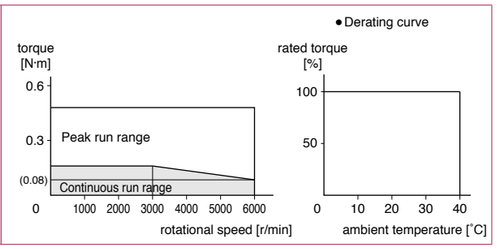

With oil seal

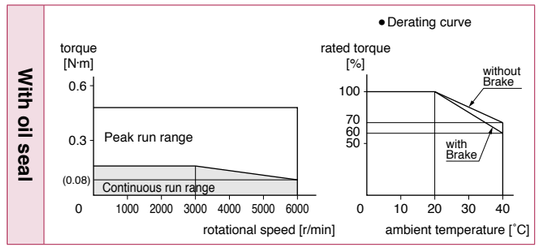

Dimensions

Motor specifications	Round shaft/ Key way, center tap shaft					
	without brake			with brake		
	without oil seal	with oil seal	with protective lip/ with oil seal	without oil seal	with oil seal	with protective lip/ with oil seal
Leadwire type (IP65)	P.253		—	P.253		—

<Cautions> Reduce the moment of inertia ratio if high speed response operation is required.
Dimensions are subject to change without notice. Contact us or a dealer for the latest information.
Read the Instruction Manual carefully and understand all precautions and remarks before using the products.
Please avoid the motor, or equipment containing the motor to be distributed to Japan, or other regions through Japan.

Special Order Product | 200 V **MSMF 100 W** [Low inertia 38 mm sq.] IP65

• Please contact us for more information.

Specifications

			AC200 V
Motor model *1			MSMF012L1□□M
Applicable driver	Model No.	Multifunction type	MADLT05SF
		RS485 communication type *2	MADLN05SG
		Basic type *2	MADLN05SE
	Frame symbol		A-frame
Power supply capacity		(kVA)	0.5
Rated output		(W)	100
Rated torque		(N·m)	0.32
Continuous stall torque		(N·m)	0.32
Momentary Max. peak torque		(N·m)	0.95
Rated current		(A(rms))	1.1
Max. current		(A(o-p))	4.7
Regenerative brake frequency (times/min) Note)1	Without option		No limit Note)2
	DV0P4281		No limit Note)2
Rated rotational speed		(r/min)	3000
Max. rotational speed		(r/min)	6000
Moment of inertia of rotor ($\times 10^{-4}$ kg·m^2)	Without brake		0.048
	With brake		0.051
Recommended moment of inertia ratio of the load and the rotor Note)3			30 times or less
Rotary encoder specifications *3			23-bit Absolute
	Resolution per single turn		8388608

- **Brake specifications** (For details, refer to P.305)

(This brake will be released when it is energized. Do not use this for braking the motor in motion.)

Static friction torque (N·m)	0.294 or more
Engaging time (ms)	35 or less
Releasing time (ms) Note)4	20 or less
Exciting current (DC) (A)	0.30
Releasing voltage (DC) (V)	1 or more
Exciting voltage (DC) (V)	24±1.2

- **Permissible load** (For details, refer to P.304)

During assembly	Radial load P-direction (N)	147
	Thrust load A-direction (N)	88.0
	Thrust load B-direction (N)	117.6
During operation	Radial load P-direction (N)	68.6
	Thrust load A, B-direction (N)	58.8

• For details of Note)1 to Note)4, refer to P.303.
• Dimensions of Driver, refer to P.57.
*1 □□ in the motor part number represents the motor specifications.
*2 Basic type and RS485 communication type are "Position control type".
Detail of model designation, refer to P.204.
*3 When using a rotary encoder as an incremental system (not using multi-turn data), do not connect a battery for absolute encoder.

Torque characteristics (at AC200 V of power voltage <Dotted line represents the torque at 10 % less supply voltage.>)

Without oil seal

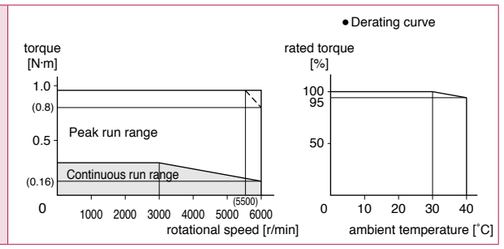

With oil seal

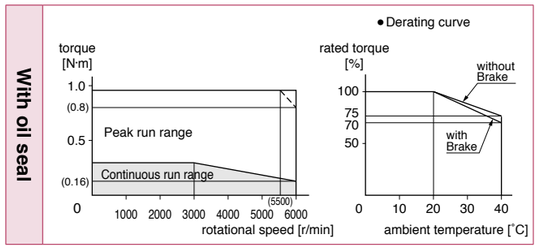

Dimensions

Motor specifications	Round shaft/ Key way, center tap shaft					
	without brake			with brake		
	without oil seal	with oil seal	with protective lip/ with oil seal	without oil seal	with oil seal	with protective lip/ with oil seal
Leadwire type (IP65)	P.253		—	P.254		—

<Cautions> Reduce the moment of inertia ratio if high speed response operation is required.
Dimensions are subject to change without notice. Contact us or a dealer for the latest information.
Read the Instruction Manual carefully and understand all precautions and remarks before using the products.
Please avoid the motor, or equipment containing the motor to be distributed to Japan, or other regions through Japan.

Special Order Product | 200 V **MSMF 200 W** [Low inertia 60 mm sq.] IP65

• Please contact us for more information.

Specifications

			AC200 V
Motor model *1			MSMF022L1□□M
Applicable driver	Model No.	Multifunction type	MADLT15SF
		RS485 communication type *2	MADLN15SG
		Basic type *2	MADLN15SE
	Frame symbol		A-frame
Power supply capacity		(kVA)	0.5
Rated output		(W)	200
Rated torque		(N·m)	0.64
Continuous stall torque		(N·m)	0.64
Momentary Max. peak torque		(N·m)	1.91
Rated current		(A(rms))	1.5
Max. current		(A(o-p))	6.5
Regenerative brake frequency (times/min) Note)1	Without option		No limit Note)2
	DV0P4283		No limit Note)2
Rated rotational speed		(r/min)	3000
Max. rotational speed		(r/min)	6000
Moment of inertia of rotor ($\times 10^{-4}$ kg·m^2)	Without brake		0.14
	With brake		0.17
Recommended moment of inertia ratio of the load and the rotor Note)3			30 times or less
Rotary encoder specifications *3			23-bit Absolute
	Resolution per single turn		8388608

• Brake specifications (For details, refer to P.305)

(This brake will be released when it is energized. Do not use this for braking the motor in motion.)

Static friction torque (N·m)	1.27 or more
Engaging time (ms)	50 or less
Releasing time (ms) Note)4	15 or less
Exciting current (DC) (A)	0.36
Releasing voltage (DC) (V)	1 or more
Exciting voltage (DC) (V)	24±1.2

• Permissible load (For details, refer to P.304)

During assembly	Radial load P-direction (N)	392
	Thrust load A-direction (N)	147
	Thrust load B-direction (N)	196
During operation	Radial load P-direction (N)	245
	Thrust load A, B-direction (N)	98.0

• For details of Note)1 to Note)4, refer to P.303.
• Dimensions of Driver, refer to P.57.
*1 □□ in the motor part number represents the motor specifications.
*2 Basic type and RS485 communication type are "Position control type".
Detail of model designation, refer to P.204.
*3 When using a rotary encoder as an incremental system (not using multi-turn data), do not connect a battery for absolute encoder.

Torque characteristics (at AC200 V of power voltage <Dotted line represents the torque at 10 % less supply voltage.>)

Without oil seal

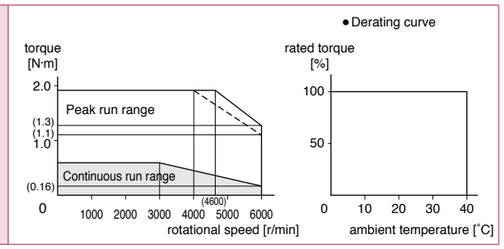

With oil seal

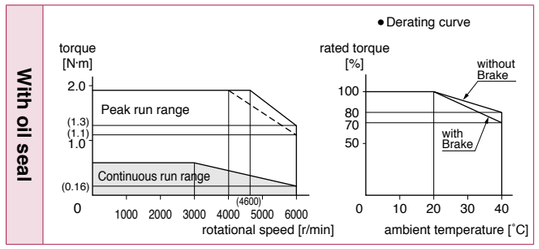

Dimensions

Motor specifications	Round shaft/ Key way, center tap shaft					
	without brake			with brake		
	without oil seal	with oil seal	with protective lip/ with oil seal	without oil seal	with oil seal	with protective lip/ with oil seal
Leadwire type (IP65)	P.254		—	P.254		—

<Cautions> Reduce the moment of inertia ratio if high speed response operation is required.
Dimensions are subject to change without notice. Contact us or a dealer for the latest information.
Read the Instruction Manual carefully and understand all precautions and remarks before using the products.
Please avoid the motor, or equipment containing the motor to be distributed to Japan, or other regions through Japan.

Special Order Product | 200 V **MSMF 400 W** [Low inertia 60 mm sq.] IP65

• Please contact us for more information.

Specifications

			AC200 V
Motor model *1			MSMF042L1□□M
Applicable driver	Model No.	Multifunction type	MBDLT25SF
		RS485 communication type *2	MBDLN25SG
		Basic type *2	MBDLN25SE
	Frame symbol		B-frame
Power supply capacity		(kVA)	0.9
Rated output		(W)	400
Rated torque		(N·m)	1.27
Continuous stall torque		(N·m)	1.27
Momentary Max. peak torque		(N·m)	3.82
Rated current		(A(rms))	2.4
Max. current		(A(o-p))	10.2
Regenerative brake frequency (times/min) Note)1	Without option		No limit Note)2
	DV0P4283		No limit Note)2
Rated rotational speed		(r/min)	3000
Max. rotational speed		(r/min)	6000
Moment of inertia of rotor ($\times 10^{-4}$ kg·m^2)	Without brake		0.27
	With brake		0.30
Recommended moment of inertia ratio of the load and the rotor Note)3			30 times or less
Rotary encoder specifications *3			23-bit Absolute
	Resolution per single turn		8388608

• Brake specifications (For details, refer to P.305)

(This brake will be released when it is energized. Do not use this for braking the motor in motion.)

Static friction torque (N·m)	1.27 or more
Engaging time (ms)	50 or less
Releasing time (ms) Note)4	15 or less
Exciting current (DC) (A)	0.36
Releasing voltage (DC) (V)	1 or more
Exciting voltage (DC) (V)	24±1.2

• Permissible load (For details, refer to P.304)

During assembly	Radial load P-direction (N)	392
	Thrust load A-direction (N)	147
	Thrust load B-direction (N)	196
During operation	Radial load P-direction (N)	245
	Thrust load A, B-direction (N)	98.0

• For details of Note)1 to Note)4, refer to P.303.
• Dimensions of Driver, refer to P.57.
*1 □□ in the motor part number represents the motor specifications.
*2 Basic type and RS485 communication type are "Position control type".
Detail of model designation, refer to P.204.
*3 When using a rotary encoder as an incremental system (not using multi-turn data), do not connect a battery for absolute encoder.

Torque characteristics (at AC200 V of power voltage <Dotted line represents the torque at 10 % less supply voltage.>)

Without oil seal

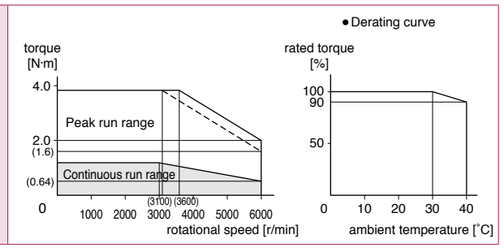

With oil seal

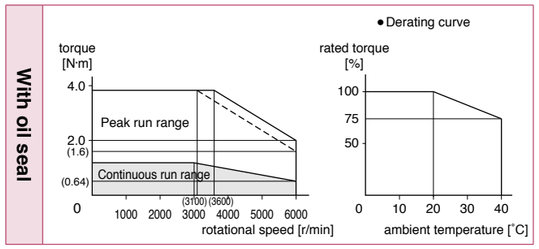

Dimensions

Motor specifications	Round shaft/ Key way, center tap shaft					
	without brake			with brake		
	without oil seal	with oil seal	with protective lip/ with oil seal	without oil seal	with oil seal	with protective lip/ with oil seal
Leadwire type (IP65)	P.255		—	P.255		—

<Cautions> Reduce the moment of inertia ratio if high speed response operation is required.
Dimensions are subject to change without notice. Contact us or a dealer for the latest information.
Read the Instruction Manual carefully and understand all precautions and remarks before using the products.
Please avoid the motor, or equipment containing the motor to be distributed to Japan, or other regions through Japan.

Special Order Product | 200 V **MSMF 750 W** [Low inertia 80 mm sq.] IP65

• Please contact us for more information.

Specifications

			AC200 V
Motor model *1			MSMF082L1□□M
Applicable driver	Model No.	Multifunction type	MCDLT35SF
		RS485 communication type *2	MCDLN35SG
		Basic type *2	MCDLN35SE
	Frame symbol		C-frame
Power supply capacity		(kVA)	1.8
Rated output		(W)	750
Rated torque		(N·m)	2.39
Continuous stall torque		(N·m)	2.39
Momentary Max. peak torque		(N·m)	7.16
Rated current		(A(rms))	4.1
Max. current		(A(o-p))	17.4
Regenerative brake frequency (times/min) Note)1	Without option		No limit Note)2
	DV0P4283		No limit Note)2
Rated rotational speed		(r/min)	3000
Max. rotational speed		(r/min)	6000
Moment of inertia of rotor ($\times 10^{-4}$ kg·m^2)	Without brake		0.96
	With brake		1.06
Recommended moment of inertia ratio of the load and the rotor Note)3			20 times or less
Rotary encoder specifications *3			23-bit Absolute
	Resolution per single turn		8388608

• Brake specifications (For details, refer to P.305)

(This brake will be released when it is energized. Do not use this for braking the motor in motion.)

Static friction torque (N·m)	2.45 or more
Engaging time (ms)	70 or less
Releasing time (ms) Note)4	20 or less
Exciting current (DC) (A)	0.42
Releasing voltage (DC) (V)	1 or more
Exciting voltage (DC) (V)	24±1.2

• Permissible load (For details, refer to P.304)

During assembly	Radial load P-direction (N)	686
	Thrust load A-direction (N)	294
	Thrust load B-direction (N)	392
During operation	Radial load P-direction (N)	392
	Thrust load A, B-direction (N)	147

• For details of Note)1 to Note)4, refer to P.303.
• Dimensions of Driver, refer to P.58.
*1 □□ in the motor part number represents the motor specifications.
*2 Basic type and RS485 communication type are "Position control type".
Detail of model designation, refer to P.204.
*3 When using a rotary encoder as an incremental system (not using multi-turn data), do not connect a battery for absolute encoder.

Torque characteristics (at AC200 V of power voltage <Dotted line represents the torque at 10 % less supply voltage.>)

Without oil seal

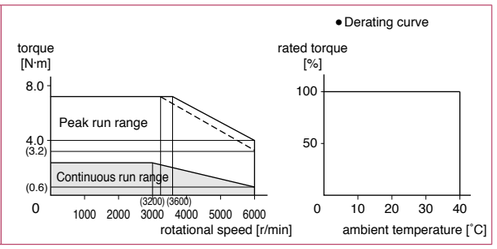

With oil seal

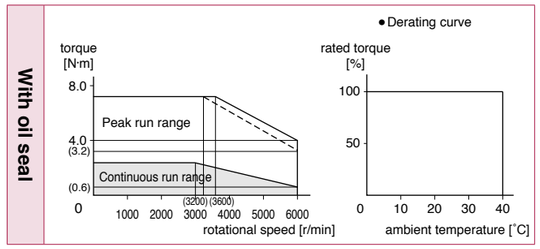

Dimensions

Motor specifications	Round shaft/ Key way, center tap shaft					
	without brake			with brake		
	without oil seal	with oil seal	with protective lip/ with oil seal	without oil seal	with oil seal	with protective lip/ with oil seal
Leadwire type (IP65)	P.255		—	P.256		—

<Cautions> Reduce the moment of inertia ratio if high speed response operation is required.
Dimensions are subject to change without notice. Contact us or a dealer for the latest information.
Read the Instruction Manual carefully and understand all precautions and remarks before using the products.
Please avoid the motor, or equipment containing the motor to be distributed to Japan, or other regions through Japan.

Special Order Product | 200 V **MSMF 1000 W** [Low inertia 80 mm sq.] IP65

• Please contact us for more information.

Specifications

			AC200 V
Motor model *1			MSMF092L1□□M
Applicable driver	Model No.	Multifunction type	MDDLT45SF
		RS485 communication type *2	MDDLN45SG
		Basic type *2	MDDLN45SE
	Frame symbol		D-frame
Power supply capacity		(kVA)	2.4
Rated output		(W)	1000
Rated torque		(N·m)	3.18
Continuous stall torque		(N·m)	3.18
Momentary Max. peak torque		(N·m)	9.55
Rated current		(A(rms))	5.7
Max. current		(A(o-p))	24.2
Regenerative brake frequency (times/min) Note)1	Without option		No limit Note)2
	DV0P4284		No limit Note)2
Rated rotational speed		(r/min)	3000
Max. rotational speed		(r/min)	6000
Moment of inertia of rotor ($\times 10^{-4}$ kg·m^2)	Without brake		1.26
	With brake		1.36
Recommended moment of inertia ratio of the load and the rotor Note)3			15 times or less
Rotary encoder specifications *3			23-bit Absolute
	Resolution per single turn		8388608

• Brake specifications (For details, refer to P.305)

(This brake will be released when it is energized. Do not use this for braking the motor in motion.)

Static friction torque (N·m)	3.80 or more
Engaging time (ms)	70 or less
Releasing time (ms) Note)4	20 or less
Exciting current (DC) (A)	0.42
Releasing voltage (DC) (V)	1 or more
Exciting voltage (DC) (V)	24±2.4

• Permissible load (For details, refer to P.304)

During assembly	Radial load P-direction (N)	686
	Thrust load A-direction (N)	294
	Thrust load B-direction (N)	392
During operation	Radial load P-direction (N)	392
	Thrust load A, B-direction (N)	147

• For details of Note)1 to Note)4, refer to P.303.
• Dimensions of Driver, refer to P.58.
*1 □□ in the motor part number represents the motor specifications.
*2 Basic type and RS485 communication type are "Position control type".
Detail of model designation, refer to P.204.
*3 When using a rotary encoder as an incremental system (not using multi-turn data), do not connect a battery for absolute encoder.

Torque characteristics (at AC200 V of power voltage <Dotted line represents the torque at 10 % less supply voltage.>)

Without oil seal

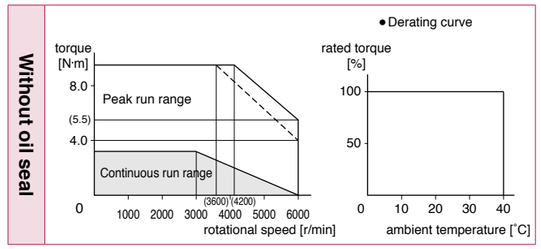

With oil seal

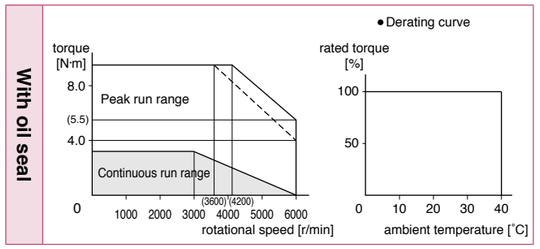

Dimensions

Motor specifications	Round shaft/ Key way, center tap shaft					
	without brake			with brake		
	without oil seal	with oil seal	with protective lip/ with oil seal	without oil seal	with oil seal	with protective lip/ with oil seal
Leadwire type (IP65)	P.256		—	P.256		—

<Cautions> Reduce the moment of inertia ratio if high speed response operation is required.
Dimensions are subject to change without notice. Contact us or a dealer for the latest information.
Read the Instruction Manual carefully and understand all precautions and remarks before using the products.
Please avoid the motor, or equipment containing the motor to be distributed to Japan, or other regions through Japan.

Special Order Product | 200 V **MSMF 1.0 kW** [Low inertia 100 mm sq.] IP67

• Please contact us for more information.

Specifications

			AC200 V
Motor model *1			MSMF102L1□□M
Applicable driver	Model No.	Multifunction type	MDDLT55SF
		RS485 communication type *2	MDDLN55SG
		Basic type *2	MDDLN55SE
	Frame symbol		D-frame
Power supply capacity		(kVA)	2.4
Rated output		(W)	1000
Rated torque		(N·m)	3.18
Continuous stall torque		(N·m)	3.82
Momentary Max. peak torque		(N·m)	9.55
Rated current		(A(rms))	6.6
Max. current		(A(o-p))	28
Regenerative brake frequency (times/min) Note)1	Without option		No limit Note)2
	DV0P4284		No limit Note)2
Rated rotational speed		(r/min)	3000
Max. rotational speed		(r/min)	5000
Moment of inertia of rotor ($\times 10^{-4}$ kg·m^2)	Without brake		2.15
	With brake		2.47
Recommended moment of inertia ratio of the load and the rotor Note)3			15 times or less
Rotary encoder specifications *3			23-bit Absolute
	Resolution per single turn		8388608

• Brake specifications (For details, refer to P.305)

(This brake will be released when it is energized. Do not use this for braking the motor in motion.)

Static friction torque (N·m)	8.0 or more
Engaging time (ms)	50 or less
Releasing time (ms) Note)4	15 or less
Exciting current (DC) (A)	0.81
Releasing voltage (DC) (V)	2 or more
Exciting voltage (DC) (V)	24±2.4

• Permissible load (For details, refer to P.304)

During assembly	Radial load P-direction (N)	980
	Thrust load A-direction (N)	588
	Thrust load B-direction (N)	686
During operation	Radial load P-direction (N)	490
	Thrust load A, B-direction (N)	196

• For details of Note)1 to Note)4, refer to P.303.
• Dimensions of Driver, refer to P.58.
*1 □□ in the motor part number represents the motor specifications.
*2 Basic type and RS485 communication type are "Position control type".
Detail of model designation, refer to P.204.
*3 When using a rotary encoder as an incremental system (not using multi-turn data), do not connect a battery for absolute encoder.

Torque characteristics (at AC200 V of power voltage <Dotted line represents the torque at 10 % less supply voltage.>)

With oil seal

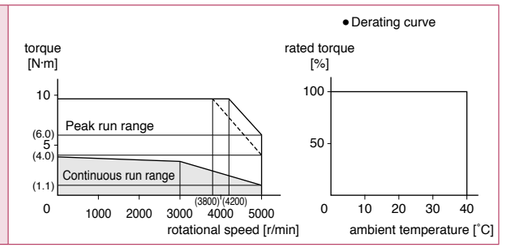

Dimensions

Motor specifications	Key way shaft/ Round shaft					
	without brake			with brake		
	without oil seal	with oil seal	with protective lip/ with oil seal	without oil seal	with oil seal	with protective lip/ with oil seal
Encoder connector Large size (JL10) type	—	P.257		—	P.257	

<Cautions> Reduce the moment of inertia ratio if high speed response operation is required.
Dimensions are subject to change without notice. Contact us or a dealer for the latest information.
Read the Instruction Manual carefully and understand all precautions and remarks before using the products.
Please avoid the motor, or equipment containing the motor to be distributed to Japan, or other regions through Japan.

• Please contact us for more information.

Specifications

			AC200 V
Motor model *1			MSMF152L1□□M
Applicable driver	Model No.	Multifunction type	MDDLT55SF
		RS485 communication type *2	MDDLN55SG
		Basic type *2	MDDLN55SE
	Frame symbol		D-frame
Power supply capacity		(kVA)	2.9
Rated output		(W)	1500
Rated torque		(N·m)	4.77
Continuous stall torque		(N·m)	5.72
Momentary Max. peak torque		(N·m)	14.3
Rated current		(A(rms))	8.2
Max. current		(A(o-p))	35
Regenerative brake frequency (times/min) Note)1	Without option		No limit Note)2
	DV0P4284		No limit Note)2
Rated rotational speed		(r/min)	3000
Max. rotational speed		(r/min)	5000
Moment of inertia of rotor ($\times 10^{-4}$ kg·m^2)	Without brake		3.10
	With brake		3.45
Recommended moment of inertia ratio of the load and the rotor Note)3			15 times or less
Rotary encoder specifications *3			23-bit Absolute
	Resolution per single turn		8388608

• Brake specifications (For details, refer to P.305)

(This brake will be released when it is energized. Do not use this for braking the motor in motion.)

Static friction torque (N·m)	8.0 or more
Engaging time (ms)	50 or less
Releasing time (ms) Note)4	15 or less
Exciting current (DC) (A)	0.81
Releasing voltage (DC) (V)	2 or more
Exciting voltage (DC) (V)	24±2.4

• Permissible load (For details, refer to P.304)

During assembly	Radial load P-direction (N)	980
	Thrust load A-direction (N)	588
	Thrust load B-direction (N)	686
During operation	Radial load P-direction (N)	490
	Thrust load A, B-direction (N)	196

• For details of Note)1 to Note)4, refer to P.303.
• Dimensions of Driver, refer to P.58.
*1 □□ in the motor part number represents the motor specifications.
*2 Basic type and RS485 communication type are "Position control type".
Detail of model designation, refer to P.204.
*3 When using a rotary encoder as an incremental system (not using multi-turn data), do not connect a battery for absolute encoder.

Torque characteristics (at AC200 V of power voltage <Dotted line represents the torque at 10 % less supply voltage.>)

With oil seal

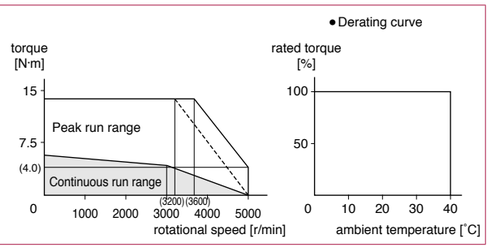

Dimensions

Motor specifications	Key way shaft/ Round shaft					
	without brake			with brake		
	without oil seal	with oil seal	with protective lip/ with oil seal	without oil seal	with oil seal	with protective lip/ with oil seal
Encoder connector Large size (JL10) type	—	P.257		—	P.258	

<Cautions> Reduce the moment of inertia ratio if high speed response operation is required.
Dimensions are subject to change without notice. Contact us or a dealer for the latest information.
Read the Instruction Manual carefully and understand all precautions and remarks before using the products.
Please avoid the motor, or equipment containing the motor to be distributed to Japan, or other regions through Japan.

Special Order Product | 200 V **MSMF 2.0 kW** [Low inertia 100 mm sq.] IP67

• Please contact us for more information.

Specifications

			AC200 V
Motor model *1			MSMF202L1□□M
Applicable driver	Model No.	Multifunction type	MEDLT83SF
		RS485 communication type *2	MEDLN83SG
		Basic type *2	MEDLN83SE
	Frame symbol		E-frame
Power supply capacity		(kVA)	3.8
Rated output		(W)	2000
Rated torque		(N·m)	6.37
Continuous stall torque		(N·m)	7.64
Momentary Max. peak torque		(N·m)	19.1
Rated current		(A(rms))	11.3
Max. current		(A(o-p))	48
Regenerative brake frequency (times/min) Note)1	Without option		No limit Note)2
	DV0P4285		No limit Note)2
Rated rotational speed		(r/min)	3000
Max. rotational speed		(r/min)	5000
Moment of inertia of rotor ($\times 10^{-4}$ kg·m^2)	Without brake		4.06
	With brake		4.41
Recommended moment of inertia ratio of the load and the rotor Note)3			15 times or less
Rotary encoder specifications *3			23-bit Absolute
	Resolution per single turn		8388608

• Brake specifications (For details, refer to P.305)

(This brake will be released when it is energized. Do not use this for braking the motor in motion.)

Static friction torque (N·m)	8.0 or more
Engaging time (ms)	50 or less
Releasing time (ms) Note)4	15 or less
Exciting current (DC) (A)	0.81
Releasing voltage (DC) (V)	2 or more
Exciting voltage (DC) (V)	24±2.4

• Permissible load (For details, refer to P.304)

During assembly	Radial load P-direction (N)	980
	Thrust load A-direction (N)	588
	Thrust load B-direction (N)	686
During operation	Radial load P-direction (N)	490
	Thrust load A, B-direction (N)	196

• For details of Note)1 to Note)4, refer to P.303.
• Dimensions of Driver, refer to P.59.
*1 □□ in the motor part number represents the motor specifications.
*2 Basic type and RS485 communication type are "Position control type".
Detail of model designation, refer to P.204.
*3 When using a rotary encoder as an incremental system (not using multi-turn data), do not connect a battery for absolute encoder.

Torque characteristics (at AC200 V of power voltage <Dotted line represents the torque at 10 % less supply voltage.>)

With oil seal

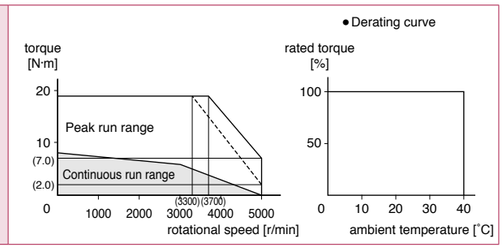

Dimensions

Motor specifications	Key way shaft/ Round shaft					
	without brake			with brake		
	without oil seal	with oil seal	with protective lip/ with oil seal	without oil seal	with oil seal	with protective lip/ with oil seal
Encoder connector Large size (JL10) type	—	P.258		—	P.258	

<Cautions> Reduce the moment of inertia ratio if high speed response operation is required.
Dimensions are subject to change without notice. Contact us or a dealer for the latest information.
Read the Instruction Manual carefully and understand all precautions and remarks before using the products.
Please avoid the motor, or equipment containing the motor to be distributed to Japan, or other regions through Japan.

Special Order Product | 200 V **MSMF 3.0 kW** [Low inertia 120 mm sq.] IP67

• Please contact us for more information.

Specifications

			AC200 V
Motor model *1			MSMF302L1□□M
Applicable driver	Model No.	Multifunction type	MFDLTA3SF
		RS485 communication type *2	MFDLNA3SG
		Basic type *2	MFDLNA3SE
	Frame symbol		F-frame
Power supply capacity		(kVA)	5.2
Rated output		(W)	3000
Rated torque		(N·m)	9.55
Continuous stall torque		(N·m)	11.0
Momentary Max. peak torque		(N·m)	28.6
Rated current		(A(rms))	18.1
Max. current		(A(o-p))	77
Regenerative brake frequency (times/min) Note)1	Without option		No limit Note)2
	DV0P4285×2		No limit Note)2
Rated rotational speed		(r/min)	3000
Max. rotational speed		(r/min)	5000
Moment of inertia of rotor ($\times 10^{-4}$ kg·m^2)	Without brake		7.04
	With brake		7.38
Recommended moment of inertia ratio of the load and the rotor Note)3			15 times or less
Rotary encoder specifications *3			23-bit Absolute
	Resolution per single turn		8388608

• Brake specifications (For details, refer to P.305)

(This brake will be released when it is energized. Do not use this for braking the motor in motion.)

Static friction torque (N·m)	12.0 or more
Engaging time (ms)	80 or less
Releasing time (ms) Note)4	15 or less
Exciting current (DC) (A)	0.81
Releasing voltage (DC) (V)	2 or more
Exciting voltage (DC) (V)	24±2.4

• Permissible load (For details, refer to P.304)

During assembly	Radial load P-direction (N)	980
	Thrust load A-direction (N)	588
	Thrust load B-direction (N)	686
During operation	Radial load P-direction (N)	490
	Thrust load A, B-direction (N)	196

• For details of Note)1 to Note)4, refer to P.303.
• Dimensions of Driver, refer to P.59.
*1 □□ in the motor part number represents the motor specifications.
*2 Basic type and RS485 communication type are "Position control type".
Detail of model designation, refer to P.204.
*3 When using a rotary encoder as an incremental system (not using multi-turn data), do not connect a battery for absolute encoder.

Torque characteristics (at AC200 V of power voltage <Dotted line represents the torque at 10 % less supply voltage.>)

With oil seal

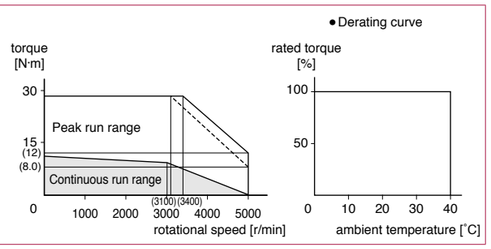

Dimensions

Motor specifications	Key way shaft/ Round shaft					
	without brake			with brake		
	without oil seal	with oil seal	with protective lip/ with oil seal	without oil seal	with oil seal	with protective lip/ with oil seal
Encoder connector Large size (JL10) type	—	P.259		—	P.259	

<Cautions> Reduce the moment of inertia ratio if high speed response operation is required.
Dimensions are subject to change without notice. Contact us or a dealer for the latest information.
Read the Instruction Manual carefully and understand all precautions and remarks before using the products.
Please avoid the motor, or equipment containing the motor to be distributed to Japan, or other regions through Japan.

Special Order Product | 200 V **MSMF 4.0 kW** [Low inertia 130 mm sq.] IP67

• Please contact us for more information.

Specifications

			AC200 V
Motor model *1			MSMF402L1□□M
Applicable driver	Model No.	Multifunction type	MFDLTB3SF
		RS485 communication type *2	MFDLNB3SG
		Basic type *2	MFDLNB3SE
	Frame symbol		F-frame
Power supply capacity (kVA)			6.5
Rated output (W)			4000
Rated torque (N·m)			12.7
Continuous stall torque (N·m)			15.2
Momentary Max. peak torque (N·m)			38.2
Rated current (A(rms))			19.6
Max. current (A(o-p))			83
Regenerative brake frequency (times/min) Note)1		Without option	No limit Note)2
		DV0P4285×2	No limit Note)2
Rated rotational speed (r/min)			3000
Max. rotational speed (r/min)			4500
Moment of inertia of rotor ($\times 10^{-4}$ kg·m^2)		Without brake	14.4
		With brake	15.6
Recommended moment of inertia ratio of the load and the rotor Note)3			15 times or less
Rotary encoder specifications *3			23-bit Absolute
	Resolution per single turn		8388608

• Brake specifications (For details, refer to P.305)

(This brake will be released when it is energized. Do not use this for braking the motor in motion.)

Static friction torque (N·m)	16.2 or more
Engaging time (ms)	110 or less
Releasing time (ms) Note)4	50 or less
Exciting current (DC) (A)	0.90
Releasing voltage (DC) (V)	2 or more
Exciting voltage (DC) (V)	24±2.4

• Permissible load (For details, refer to P.304)

During assembly	Radial load P-direction (N)	980
	Thrust load A-direction (N)	588
	Thrust load B-direction (N)	686
During operation	Radial load P-direction (N)	784
	Thrust load A, B-direction (N)	343

• For details of Note)1 to Note)4, refer to P.303.
• Dimensions of Driver, refer to P.59.
*1 □□ in the motor part number represents the motor specifications.
*2 Basic type and RS485 communication type are "Position control type".
Detail of model designation, refer to P.204.
*3 When using a rotary encoder as an incremental system (not using multi-turn data), do not connect a battery for absolute encoder.

Torque characteristics (at AC200 V of power voltage <Dotted line represents the torque at 10 % less supply voltage.>)

With oil seal

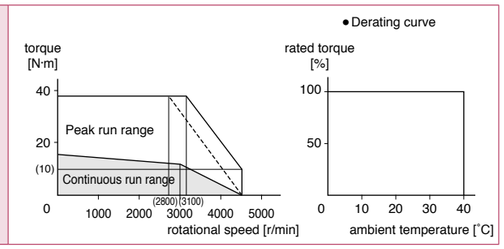

Dimensions

Motor specifications	Key way shaft/ Round shaft					
	without brake			with brake		
	without oil seal	with oil seal	with protective lip/ with oil seal	without oil seal	with oil seal	with protective lip/ with oil seal
Encoder connector Large size (JL10) type	—	P.259		—	P.260	

<Cautions> Reduce the moment of inertia ratio if high speed response operation is required.
Dimensions are subject to change without notice. Contact us or a dealer for the latest information.
Read the Instruction Manual carefully and understand all precautions and remarks before using the products.
Please avoid the motor, or equipment containing the motor to be distributed to Japan, or other regions through Japan.

Special Order Product | 200 V **MSMF 5.0 kW** [Low inertia 130 mm sq.] IP67

• Please contact us for more information.

Specifications

			AC200 V
Motor model *1			MSMF502L1□□M
Applicable driver	Model No.	Multifunction type	MFDLTB3SF
		RS485 communication type *2	MFDLNB3SG
		Basic type *2	MFDLNB3SE
	Frame symbol		F-frame
Power supply capacity (kVA)			7.8
Rated output (W)			5000
Rated torque (N·m)			15.9
Continuous stall torque (N·m)			19.1
Momentary Max. peak torque (N·m)			47.7
Rated current (A(rms))			24.0
Max. current (A(o-p))			102
Regenerative brake frequency (times/min) Note)1		Without option	No limit Note)2
		DV0P4285×2	No limit Note)2
Rated rotational speed (r/min)			3000
Max. rotational speed (r/min)			4500
Moment of inertia of rotor ($\times 10^{-4}$ kg·m^2)		Without brake	19.0
		With brake	20.2
Recommended moment of inertia ratio of the load and the rotor Note)3			15 times or less
Rotary encoder specifications *3			23-bit Absolute
	Resolution per single turn		8388608

• Brake specifications (For details, refer to P.305)

(This brake will be released when it is energized. Do not use this for braking the motor in motion.)

Static friction torque (N·m)	22.0 or more
Engaging time (ms)	110 or less
Releasing time (ms) Note)4	50 or less
Exciting current (DC) (A)	0.90
Releasing voltage (DC) (V)	2 or more
Exciting voltage (DC) (V)	24±2.4

• Permissible load (For details, refer to P.304)

During assembly	Radial load P-direction (N)	980
	Thrust load A-direction (N)	588
	Thrust load B-direction (N)	686
During operation	Radial load P-direction (N)	784
	Thrust load A, B-direction (N)	343

• For details of Note)1 to Note)4, refer to P.303.
• Dimensions of Driver, refer to P.59.
*1 □□ in the motor part number represents the motor specifications.
*2 Basic type and RS485 communication type are "Position control type".
Detail of model designation, refer to P.204.
*3 When using a rotary encoder as an incremental system (not using multi-turn data), do not connect a battery for absolute encoder.

Torque characteristics (at AC200 V of power voltage <Dotted line represents the torque at 10 % less supply voltage.>)

With oil seal

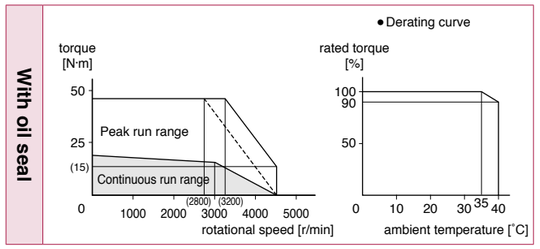

Dimensions

Motor specifications	Key way shaft/ Round shaft					
	without brake			with brake		
	without oil seal	with oil seal	with protective lip/ with oil seal	without oil seal	with oil seal	with protective lip/ with oil seal
Encoder connector Large size (JL10) type	—	P.260		—	P.260	

<Cautions> Reduce the moment of inertia ratio if high speed response operation is required.
Dimensions are subject to change without notice. Contact us or a dealer for the latest information.
Read the Instruction Manual carefully and understand all precautions and remarks before using the products.
Please avoid the motor, or equipment containing the motor to be distributed to Japan, or other regions through Japan.

Special Order Product | 200 V **MQMF 100 W** [Middle inertia Flat type 60 mm sq.] IP65

• Please contact us for more information.

Specifications

			AC200 V
Motor model *1			MQMF012L1□□M
Applicable driver	Model No.	Multifunction type	MADLT05SF
		RS485 communication type *2	MADLN05SG
		Basic type *2	MADLN05SE
	Frame symbol		A-frame
Power supply capacity		(kVA)	0.5
Rated output		(W)	100
Rated torque		(N·m)	0.32
Continuous stall torque		(N·m)	0.33
Momentary Max. peak torque		(N·m)	1.11
Rated current		(A(rms))	1.1
Max. current		(A(o-p))	5.5
Regenerative brake frequency (times/min) Note)1	Without option		No limit Note)2
	DV0P4281		No limit Note)2
Rated rotational speed		(r/min)	3000
Max. rotational speed		(r/min)	6500
Moment of inertia of rotor ($\times 10^{-4}$ kg·m^2)	Without brake		0.15
	With brake		0.18
Recommended moment of inertia ratio of the load and the rotor Note)3			20 times or less
Rotary encoder specifications *3			23-bit Absolute
	Resolution per single turn		8388608

• Brake specifications (For details, refer to P.305)

(This brake will be released when it is energized. Do not use this for braking the motor in motion.)

Static friction torque (N·m)	0.39 or more
Engaging time (ms)	15 or less
Releasing time (ms) Note)4	20 or less
Exciting current (DC) (A)	0.30
Releasing voltage (DC) (V)	1 or more
Exciting voltage (DC) (V)	24±2.4

• Permissible load (For details, refer to P.304)

During assembly	Radial load P-direction (N)	147
	Thrust load A-direction (N)	88
	Thrust load B-direction (N)	117.6
During operation	Radial load P-direction (N)	68.6
	Thrust load A, B-direction (N)	58.8

• For details of Note)1 to Note)4, refer to P.303.
• Dimensions of Driver, refer to P.57.
*1 □□ in the motor part number represents the motor specifications.
*2 Basic type and RS485 communication type are "Position control type".
Detail of model designation, refer to P.204.
*3 When using a rotary encoder as an incremental system (not using multi-turn data), do not connect a battery for absolute encoder.

Torque characteristics (at AC200 V of power voltage <Dotted line represents the torque at 10 % less supply voltage.>)

Without oil seal

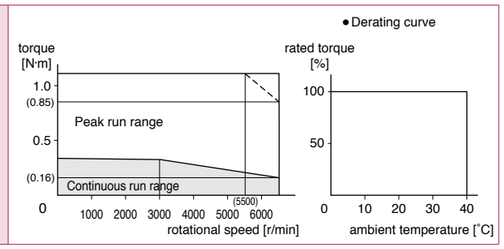

With oil seal

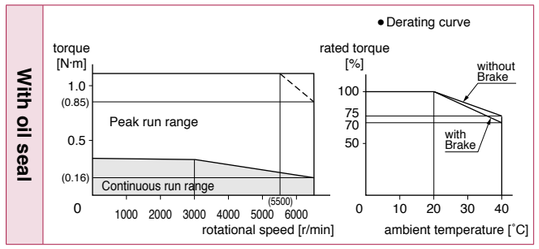

Dimensions

Motor specifications	Round shaft/ Key way, center tap shaft					
	without brake			with brake		
	without oil seal	with oil seal	with protective lip/ with oil seal	without oil seal	with oil seal	with protective lip/ with oil seal
Leadwire type (IP65)	P.261	P.261	P.261	P.262	P.262	P.262

<Cautions> Reduce the moment of inertia ratio if high speed response operation is required.
Dimensions are subject to change without notice. Contact us or a dealer for the latest information.
Read the Instruction Manual carefully and understand all precautions and remarks before using the products.
Please avoid the motor, or equipment containing the motor to be distributed to Japan, or other regions through Japan.

Special Order Product | 200 V **MQMF 200 W** [Middle inertia Flat type 80 mm sq.] IP65

• Please contact us for more information.

Specifications

			AC200 V
Motor model *1			MQMF022L1□□M
Applicable driver	Model No.	Multifunction type	MADLT15SF
		RS485 communication type *2	MADLN15SG
		Basic type *2	MADLN15SE
	Frame symbol		A-frame
Power supply capacity		(kVA)	0.5
Rated output		(W)	200
Rated torque		(N·m)	0.64
Continuous stall torque		(N·m)	0.76
Momentary Max. peak torque		(N·m)	2.23
Rated current		(A(rms))	1.4
Max. current		(A(o-p))	6.9
Regenerative brake frequency (times/min) Note)1	Without option		No limit Note)2
	DV0P4283		No limit Note)2
Rated rotational speed		(r/min)	3000
Max. rotational speed		(r/min)	6500
Moment of inertia of rotor ($\times 10^{-4}$ kg·m^2)	Without brake		0.50
	With brake		0.59
Recommended moment of inertia ratio of the load and the rotor Note)3			20 times or less
Rotary encoder specifications *3			23-bit Absolute
	Resolution per single turn		8388608

• Brake specifications (For details, refer to P.305)

(This brake will be released when it is energized. Do not use this for braking the motor in motion.)

Static friction torque (N·m)	1.6 or more
Engaging time (ms)	70 or less
Releasing time (ms) Note)4	20 or less
Exciting current (DC) (A)	0.36
Releasing voltage (DC) (V)	1 or more
Exciting voltage (DC) (V)	24±2.4

• Permissible load (For details, refer to P.304)

During assembly	Radial load P-direction (N)	392
	Thrust load A-direction (N)	147
	Thrust load B-direction (N)	196
During operation	Radial load P-direction (N)	245
	Thrust load A, B-direction (N)	98

• For details of Note)1 to Note)4, refer to P.303.
• Dimensions of Driver, refer to P.57.
*1 □□ in the motor part number represents the motor specifications.
*2 Basic type and RS485 communication type are "Position control type".
Detail of model designation, refer to P.204.
*3 When using a rotary encoder as an incremental system (not using multi-turn data), do not connect a battery for absolute encoder.

Torque characteristics (at AC200 V of power voltage <Dotted line represents the torque at 10 % less supply voltage.>)

Without oil seal

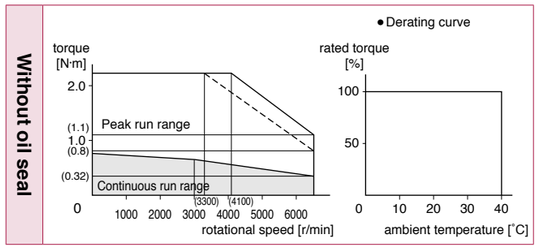

With oil seal

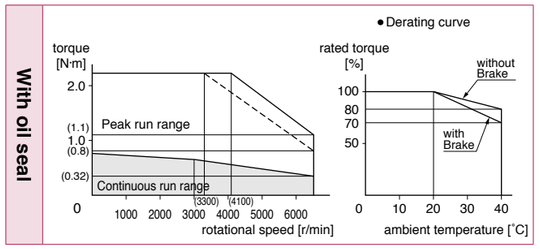

Dimensions

Motor specifications	Round shaft/ Key way, center tap shaft					
	without brake			with brake		
	without oil seal	with oil seal	with protective lip/ with oil seal	without oil seal	with oil seal	with protective lip/ with oil seal
Leadwire type (IP65)	P.263	P.263	P.263	P.264	P.264	P.264

<Cautions> Reduce the moment of inertia ratio if high speed response operation is required.
Dimensions are subject to change without notice. Contact us or a dealer for the latest information.
Read the Instruction Manual carefully and understand all precautions and remarks before using the products.
Please avoid the motor, or equipment containing the motor to be distributed to Japan, or other regions through Japan.

Special Order Product | 200 V **MQMF 400 W** [Middle inertia Flat type 80 mm sq.] IP65

• Please contact us for more information.

Specifications

			AC200 V
Motor model *1			MQMF042L1□□M
Applicable driver	Model No.	Multifunction type	MBDLT25SF
		RS485 communication type *2	MBDLN25SG
		Basic type *2	MBDLN25SE
	Frame symbol		B-frame
Power supply capacity		(kVA)	0.9
Rated output		(W)	400
Rated torque		(N·m)	1.27
Continuous stall torque		(N·m)	1.40
Momentary Max. peak torque		(N·m)	4.46
Rated current		(A(rms))	2.1
Max. current		(A(o-p))	10.4
Regenerative brake frequency (times/min) Note)1	Without option		No limit Note)2
	DV0P4283		No limit Note)2
Rated rotational speed		(r/min)	3000
Max. rotational speed		(r/min)	6500
Moment of inertia of rotor ($\times 10^{-4}$ kg·m^2)	Without brake		0.98
	With brake		1.06
Recommended moment of inertia ratio of the load and the rotor Note)3			20 times or less
Rotary encoder specifications *3			23-bit Absolute
	Resolution per single turn		8388608

• Brake specifications (For details, refer to P.305)

(This brake will be released when it is energized. Do not use this for braking the motor in motion.)

Static friction torque (N·m)	1.6 or more
Engaging time (ms)	70 or less
Releasing time (ms) Note)4	20 or less
Exciting current (DC) (A)	0.36
Releasing voltage (DC) (V)	1 or more
Exciting voltage (DC) (V)	24±2.4

• Permissible load (For details, refer to P.304)

During assembly	Radial load P-direction (N)	392
	Thrust load A-direction (N)	147
	Thrust load B-direction (N)	196
During operation	Radial load P-direction (N)	245
	Thrust load A, B-direction (N)	98

• For details of Note)1 to Note)4, refer to P.303.
• Dimensions of Driver, refer to P.57.
*1 □□ in the motor part number represents the motor specifications.
*2 Basic type and RS485 communication type are "Position control type".
Detail of model designation, refer to P.204.
*3 When using a rotary encoder as an incremental system (not using multi-turn data), do not connect a battery for absolute encoder.

Torque characteristics (at AC200 V of power voltage <Dotted line represents the torque at 10 % less supply voltage.>)

Without oil seal

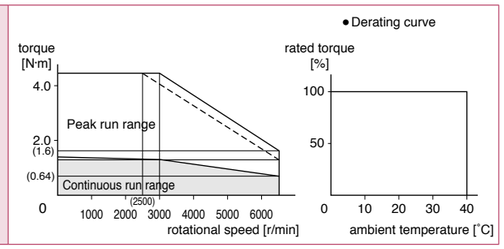

With oil seal

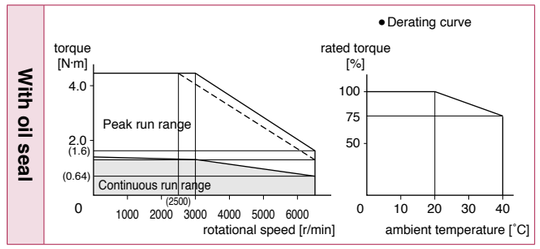

Dimensions

Motor specifications	Round shaft/ Key way, center tap shaft					
	without brake			with brake		
	without oil seal	with oil seal	with protective lip/ with oil seal	without oil seal	with oil seal	with protective lip/ with oil seal
Leadwire type (IP65)	P.265	P.265	P.265	P.266	P.266	P.266

<Cautions> Reduce the moment of inertia ratio if high speed response operation is required.
Dimensions are subject to change without notice. Contact us or a dealer for the latest information.
Read the Instruction Manual carefully and understand all precautions and remarks before using the products.
Please avoid the motor, or equipment containing the motor to be distributed to Japan, or other regions through Japan.

Special Order Product | 200 V **MHMF 50 W** [High inertia 40 mm sq.] IP65

• Please contact us for more information.

Specifications

			AC200 V
Motor model *1			MHMF5AZL1□□M
Applicable driver	Model No.	Multifunction type	MADLT05SF
		RS485 communication type *2	MADLN05SG
		Basic type *2	MADLN05SE
	Frame symbol		A-frame
Power supply capacity		(kVA)	0.5
Rated output		(W)	50
Rated torque		(N·m)	0.16
Continuous stall torque		(N·m)	0.18
Momentary Max. peak torque		(N·m)	0.56
Rated current		(A(rms))	1.1
Max. current		(A(o-p))	5.5
Regenerative brake frequency (times/min) Note)1	Without option		No limit Note)2
	DV0P4281		No limit Note)2
Rated rotational speed		(r/min)	3000
Max. rotational speed		(r/min)	6500
Moment of inertia of rotor ($\times 10^{-4}$ kg·m^2)	Without brake		0.038
	With brake		0.042
Recommended moment of inertia ratio of the load and the rotor Note)3			30 times or less
Rotary encoder specifications *3			23-bit Absolute
	Resolution per single turn		8388608

• Brake specifications (For details, refer to P.305)

(This brake will be released when it is energized. Do not use this for braking the motor in motion.)

Static friction torque (N·m)	0.38 or more
Engaging time (ms)	35 or less
Releasing time (ms) Note)4	20 or less
Exciting current (DC) (A)	0.30
Releasing voltage (DC) (V)	1 or more
Exciting voltage (DC) (V)	24±2.4

• Permissible load (For details, refer to P.304)

During assembly	Radial load P-direction (N)	147
	Thrust load A-direction (N)	88
	Thrust load B-direction (N)	117.6
During operation	Radial load P-direction (N)	68.6
	Thrust load A, B-direction (N)	49

• For details of Note)1 to Note)4, refer to P.303.
• Dimensions of Driver, refer to P.57.
*1 □□ in the motor part number represents the motor specifications.
*2 Basic type and RS485 communication type are "Position control type".
Detail of model designation, refer to P.204.
*3 When using a rotary encoder as an incremental system (not using multi-turn data), do not connect a battery for absolute encoder.

Torque characteristics (at AC200 V of power voltage <Dotted line represents the torque at 10 % less supply voltage.>)

Without oil seal

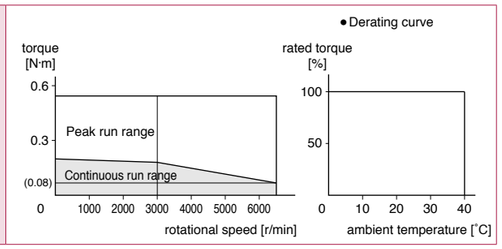

With oil seal

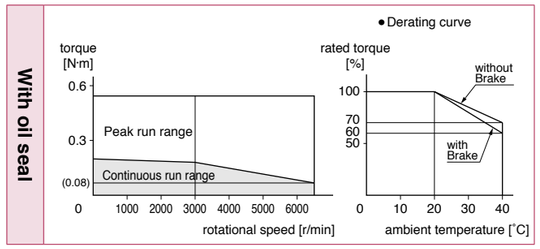

Dimensions

Motor specifications	Round shaft/ Key way, center tap shaft					
	without brake			with brake		
	without oil seal	with oil seal	with protective lip/ with oil seal	without oil seal	with oil seal	with protective lip/ with oil seal
Leadwire type (IP65)	P.267	P.267	P.267	P.268	P.268	P.268

<Cautions> Reduce the moment of inertia ratio if high speed response operation is required.
Dimensions are subject to change without notice. Contact us or a dealer for the latest information.
Read the Instruction Manual carefully and understand all precautions and remarks before using the products.
Please avoid the motor, or equipment containing the motor to be distributed to Japan, or other regions through Japan.

Special Order Product | 200 V **MHMF 100 W** [High inertia 40 mm sq.] IP65

• Please contact us for more information.

Specifications

			AC200 V
Motor model *1			MHMF012L1□□M
Applicable driver	Model No.	Multifunction type	MADLT05SF
		RS485 communication type *2	MADLN05SG
		Basic type *2	MADLN05SE
	Frame symbol		A-frame
Power supply capacity		(kVA)	0.5
Rated output		(W)	100
Rated torque		(N·m)	0.32
Continuous stall torque		(N·m)	0.33
Momentary Max. peak torque		(N·m)	1.11
Rated current		(A(rms))	1.1
Max. current		(A(o-p))	5.5
Regenerative brake frequency (times/min) Note)1	Without option		No limit Note)2
	DV0P4281		No limit Note)2
Rated rotational speed		(r/min)	3000
Max. rotational speed		(r/min)	6500
Moment of inertia of rotor ($\times 10^{-4}$ kg·m^2)	Without brake		0.071
	With brake		0.074
Recommended moment of inertia ratio of the load and the rotor Note)3			30 times or less
Rotary encoder specifications *3			23-bit Absolute
	Resolution per single turn		8388608

• Brake specifications (For details, refer to P.305)

(This brake will be released when it is energized. Do not use this for braking the motor in motion.)

Static friction torque (N·m)	0.38 or more
Engaging time (ms)	35 or less
Releasing time (ms) Note)4	20 or less
Exciting current (DC) (A)	0.30
Releasing voltage (DC) (V)	1 or more
Exciting voltage (DC) (V)	24±2.4

• Permissible load (For details, refer to P.304)

During assembly	Radial load P-direction (N)	147
	Thrust load A-direction (N)	88
	Thrust load B-direction (N)	117.6
During operation	Radial load P-direction (N)	68.6
	Thrust load A, B-direction (N)	58.8

• For details of Note)1 to Note)4, refer to P.303.
• Dimensions of Driver, refer to P.57.
*1 □□ in the motor part number represents the motor specifications.
*2 Basic type and RS485 communication type are "Position control type".
Detail of model designation, refer to P.204.
*3 When using a rotary encoder as an incremental system (not using multi-turn data), do not connect a battery for absolute encoder.

Torque characteristics (at AC200 V of power voltage <Dotted line represents the torque at 10 % less supply voltage.>)

Without oil seal

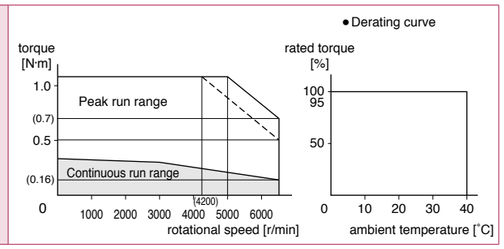

With oil seal

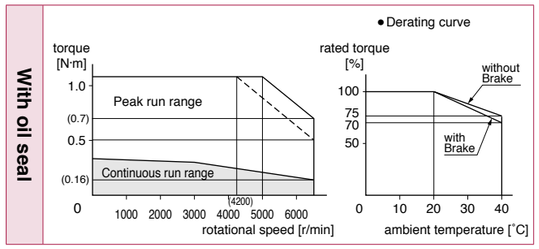

Dimensions

Motor specifications	Round shaft/ Key way, center tap shaft					
	without brake			with brake		
	without oil seal	with oil seal	with protective lip/ with oil seal	without oil seal	with oil seal	with protective lip/ with oil seal
Leadwire type (IP65)	P.269	P.269	P.269	P.270	P.270	P.270

<Cautions> Reduce the moment of inertia ratio if high speed response operation is required.
Dimensions are subject to change without notice. Contact us or a dealer for the latest information.
Read the Instruction Manual carefully and understand all precautions and remarks before using the products.
Please avoid the motor, or equipment containing the motor to be distributed to Japan, or other regions through Japan.

Special Order Product | 200 V **MHMF 200 W** [High inertia 60 mm sq.] IP65

• Please contact us for more information.

Specifications

			AC200 V
Motor model *1			MHMF022L1□□M
Applicable driver	Model No.	Multifunction type	MADLT15SF
		RS485 communication type *2	MADLN15SG
		Basic type *2	MADLN15SE
	Frame symbol		A-frame
Power supply capacity		(kVA)	0.5
Rated output		(W)	200
Rated torque		(N·m)	0.64
Continuous stall torque		(N·m)	0.76
Momentary Max. peak torque		(N·m)	2.23
Rated current		(A(rms))	1.4
Max. current		(A(o-p))	6.9
Regenerative brake frequency (times/min) Note)1	Without option		No limit Note)2
	DV0P4283		No limit Note)2
Rated rotational speed		(r/min)	3000
Max. rotational speed		(r/min)	6500
Moment of inertia of rotor ($\times 10^{-4}$ kg·m^2)	Without brake		0.29
	With brake		0.31
Recommended moment of inertia ratio of the load and the rotor Note)3			30 times or less
Rotary encoder specifications *3			23-bit Absolute
	Resolution per single turn		8388608

• Brake specifications (For details, refer to P.305)

(This brake will be released when it is energized. Do not use this for braking the motor in motion.)

Static friction torque (N·m)	1.6 or more
Engaging time (ms)	50 or less
Releasing time (ms) Note)4	20 or less
Exciting current (DC) (A)	0.36
Releasing voltage (DC) (V)	1 or more
Exciting voltage (DC) (V)	24±2.4

• Permissible load (For details, refer to P.304)

During assembly	Radial load P-direction (N)	392
	Thrust load A-direction (N)	147
	Thrust load B-direction (N)	196
During operation	Radial load P-direction (N)	245
	Thrust load A, B-direction (N)	98

• For details of Note)1 to Note)4, refer to P.303.
• Dimensions of Driver, refer to P.57.
*1 □□ in the motor part number represents the motor specifications.
*2 Basic type and RS485 communication type are "Position control type".
Detail of model designation, refer to P.204.
*3 When using a rotary encoder as an incremental system (not using multi-turn data), do not connect a battery for absolute encoder.

Torque characteristics (at AC200 V of power voltage <Dotted line represents the torque at 10 % less supply voltage.>)

Without oil seal

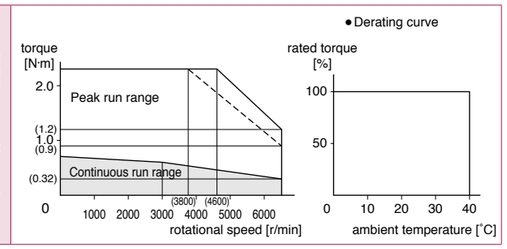

With oil seal

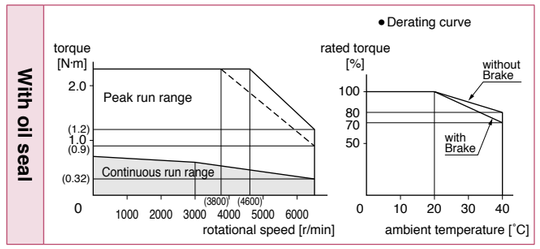

Dimensions

Motor specifications	Round shaft/ Key way, center tap shaft					
	without brake			with brake		
	without oil seal	with oil seal	with protective lip/ with oil seal	without oil seal	with oil seal	with protective lip/ with oil seal
Leadwire type (IP65)	P.271	P.271	P.271	P.272	P.272	P.272

<Cautions> Reduce the moment of inertia ratio if high speed response operation is required.
Dimensions are subject to change without notice. Contact us or a dealer for the latest information.
Read the Instruction Manual carefully and understand all precautions and remarks before using the products.
Please avoid the motor, or equipment containing the motor to be distributed to Japan, or other regions through Japan.

Special Order Product | 200 V **MHMF 400 W** [High inertia 60 mm sq.] IP65

• Please contact us for more information.

Specifications

			AC200 V
Motor model *1			MHMF042L1□□M
Applicable driver	Model No.	Multifunction type	MBDLT25SF
		RS485 communication type *2	MBDLN25SG
		Basic type *2	MBDLN25SE
	Frame symbol		B-frame
Power supply capacity		(kVA)	0.9
Rated output		(W)	400
Rated torque		(N·m)	1.27
Continuous stall torque		(N·m)	1.40
Momentary Max. peak torque		(N·m)	4.46
Rated current		(A(rms))	2.1
Max. current		(A(o-p))	10.4
Regenerative brake frequency (times/min) Note)1	Without option		No limit Note)2
	DV0P4283		No limit Note)2
Rated rotational speed		(r/min)	3000
Max. rotational speed		(r/min)	6500
Moment of inertia of rotor ($\times 10^{-4}$ kg·m^2)	Without brake		0.56
	With brake		0.58
Recommended moment of inertia ratio of the load and the rotor Note)3			30 times or less
Rotary encoder specifications *3			23-bit Absolute
	Resolution per single turn		8388608

• Brake specifications (For details, refer to P.305)

(This brake will be released when it is energized.
Do not use this for braking the motor in motion.)

Static friction torque (N·m)	1.6 or more
Engaging time (ms)	50 or less
Releasing time (ms) Note)4	20 or less
Exciting current (DC) (A)	0.36
Releasing voltage (DC) (V)	1 or more
Exciting voltage (DC) (V)	24±2.4

• Permissible load (For details, refer to P.304)

During assembly	Radial load P-direction (N)	392
	Thrust load A-direction (N)	147
	Thrust load B-direction (N)	196
During operation	Radial load P-direction (N)	245
	Thrust load A, B-direction (N)	98

• For details of Note)1 to Note)4, refer to P.303.
• Dimensions of Driver, refer to P.57.
*1 □□ in the motor part number represents the motor specifications.
*2 Basic type and RS485 communication type are "Position control type".
Detail of model designation, refer to P.204.
*3 When using a rotary encoder as an incremental system (not using multi-turn data), do not connect a battery for absolute encoder.

Torque characteristics (at AC200 V of power voltage <Dotted line represents the torque at 10 % less supply voltage.>)

Without oil seal

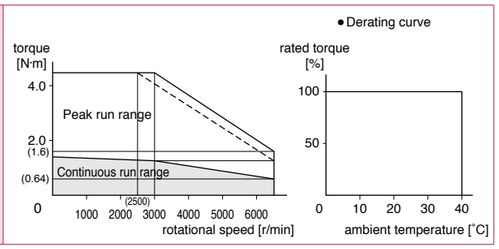

With oil seal

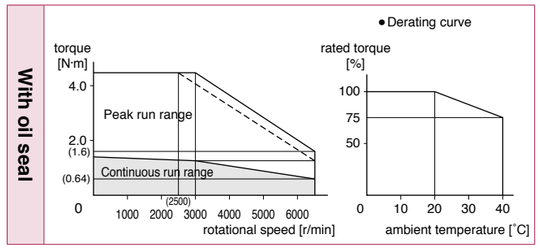

Dimensions

Motor specifications	Round shaft/ Key way, center tap shaft					
	without brake			with brake		
	without oil seal	with oil seal	with protective lip/ with oil seal	without oil seal	with oil seal	with protective lip/ with oil seal
Leadwire type (IP65)	P.273	P.273	P.273	P.274	P.274	P.274

<Cautions> Reduce the moment of inertia ratio if high speed response operation is required.
Dimensions are subject to change without notice. Contact us or a dealer for the latest information.
Read the Instruction Manual carefully and understand all precautions and remarks before using the products.
Please avoid the motor, or equipment containing the motor to be distributed to Japan, or other regions through Japan.

Special Order Product | 200 V **MHMF 750 W** [High inertia 80 mm sq.] IP65

• Please contact us for more information.

Specifications

			AC200 V
Motor model *1			MHMF082L1□□M
Applicable driver	Model No.	Multifunction type	MCDLT35SF
		RS485 communication type *2	MCDLN35SG
		Basic type *2	MCDLN35SE
	Frame symbol		C-frame
Power supply capacity		(kVA)	1.8
Rated output		(W)	750
Rated torque		(N·m)	2.39
Continuous stall torque		(N·m)	2.86
Momentary Max. peak torque		(N·m)	8.36
Rated current		(A(rms))	3.8
Max. current		(A(o-p))	18.8
Regenerative brake frequency (times/min) Note)1	Without option		No limit Note)2
	DV0P4283		No limit Note)2
Rated rotational speed		(r/min)	3000
Max. rotational speed		(r/min)	6000
Moment of inertia of rotor ($\times 10^{-4}$ kg·m^2)	Without brake		1.56
	With brake		1.66
Recommended moment of inertia ratio of the load and the rotor Note)3			20 times or less
Rotary encoder specifications *3			23-bit Absolute
	Resolution per single turn		8388608

• Brake specifications (For details, refer to P.305)

(This brake will be released when it is energized.
Do not use this for braking the motor in motion.)

Static friction torque (N·m)	3.8 or more
Engaging time (ms)	70 or less
Releasing time (ms) Note)4	20 or less
Exciting current (DC) (A)	0.42
Releasing voltage (DC) (V)	1 or more
Exciting voltage (DC) (V)	24±2.4

• Permissible load (For details, refer to P.304)

During assembly	Radial load P-direction (N)	686
	Thrust load A-direction (N)	294
	Thrust load B-direction (N)	392
During operation	Radial load P-direction (N)	392
	Thrust load A, B-direction (N)	147

• For details of Note)1 to Note)4, refer to P.303.
• Dimensions of Driver, refer to P.58.
*1 □□ in the motor part number represents the motor specifications.
*2 Basic type and RS485 communication type are "Position control type".
Detail of model designation, refer to P.204.
*3 When using a rotary encoder as an incremental system (not using multi-turn data), do not connect a battery for absolute encoder.

Torque characteristics (at AC200 V of power voltage <Dotted line represents the torque at 10 % less supply voltage.>)

Without oil seal

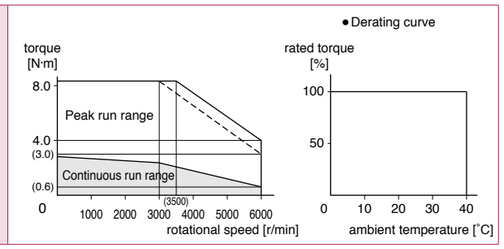

With oil seal

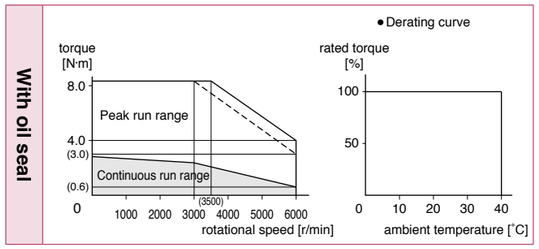

Dimensions

Motor specifications	Round shaft/ Key way, center tap shaft					
	without brake			with brake		
	without oil seal	with oil seal	with protective lip/ with oil seal	without oil seal	with oil seal	with protective lip/ with oil seal
Leadwire type (IP65)	P.275	P.275	P.275	P.276	P.276	P.276

<Cautions> Reduce the moment of inertia ratio if high speed response operation is required.
Dimensions are subject to change without notice. Contact us or a dealer for the latest information.
Read the Instruction Manual carefully and understand all precautions and remarks before using the products.
Please avoid the motor, or equipment containing the motor to be distributed to Japan, or other regions through Japan.

Special Order Product | 200 V **MHMF 1000 W** [High inertia 80 mm sq.] IP65

• Please contact us for more information.

Specifications

			AC200 V
Motor model *1			MHMF092L1□□M
Applicable driver	Model No.	Multifunction type	MDDLT55SF
		RS485 communication type *2	MDDLN55SG
		Basic type *2	MDDLN55SE
	Frame symbol		D-frame
Power supply capacity		(kVA)	2.4
Rated output		(W)	1000
Rated torque		(N·m)	3.18
Continuous stall torque		(N·m)	3.34
Momentary Max. peak torque		(N·m)	11.1
Rated current		(A(rms))	5.7
Max. current		(A(o-p))	28.2
Regenerative brake frequency (times/min) Note)1	Without option		No limit Note)2
	DV0P4284		No limit Note)2
Rated rotational speed		(r/min)	3000
Max. rotational speed		(r/min)	6000
Moment of inertia of rotor ($\times 10^{-4}$ kg·m^2)	Without brake		2.03
	With brake		2.13
Recommended moment of inertia ratio of the load and the rotor Note)3			15 times or less
Rotary encoder specifications *3			23-bit Absolute
	Resolution per single turn		8388608

• Brake specifications (For details, refer to P.305)

(This brake will be released when it is energized. Do not use this for braking the motor in motion.)

Static friction torque (N·m)	3.8 or more
Engaging time (ms)	70 or less
Releasing time (ms) Note)4	20 or less
Exciting current (DC) (A)	0.42
Releasing voltage (DC) (V)	1 or more
Exciting voltage (DC) (V)	24±2.4

• Permissible load (For details, refer to P.304)

During assembly	Radial load P-direction (N)	686
	Thrust load A-direction (N)	294
	Thrust load B-direction (N)	392
During operation	Radial load P-direction (N)	392
	Thrust load A, B-direction (N)	147

• For details of Note)1 to Note)4, refer to P.303.
• Dimensions of Driver, refer to P.58.
*1 □□ in the motor part number represents the motor specifications.
*2 Basic type and RS485 communication type are "Position control type".
Detail of model designation, refer to P.204.
*3 When using a rotary encoder as an incremental system (not using multi-turn data), do not connect a battery for absolute encoder.

Torque characteristics (at AC200 V of power voltage <Dotted line represents the torque at 10 % less supply voltage.>)

Without oil seal

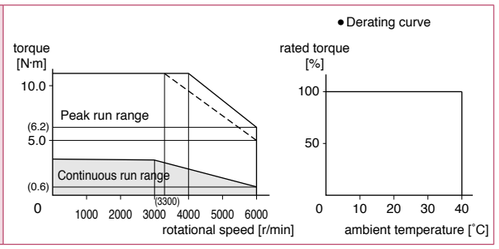

With oil seal

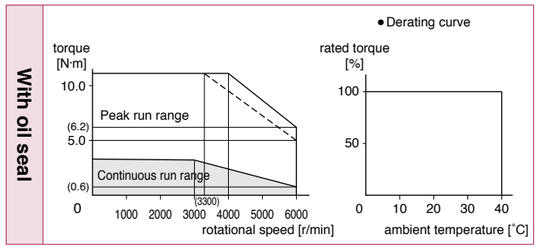

Dimensions

Motor specifications	Round shaft/ Key way, center tap shaft					
	without brake			with brake		
	without oil seal	with oil seal	with protective lip/ with oil seal	without oil seal	with oil seal	with protective lip/ with oil seal
Leadwire type (IP65)	P.277	P.277	P.277	P.278	P.278	P.278

<Cautions> Reduce the moment of inertia ratio if high speed response operation is required.
Dimensions are subject to change without notice. Contact us or a dealer for the latest information.
Read the Instruction Manual carefully and understand all precautions and remarks before using the products.
Please avoid the motor, or equipment containing the motor to be distributed to Japan, or other regions through Japan.

Special Order Product | 200 V **MHMF 1.0 kW** [High inertia 130 mm sq.] IP67

• Please contact us for more information.

Specifications

			AC200 V
Motor model *1			MHMF102L1□□M
Applicable driver	Model No.	Multifunction type	MDDLT45SF
		RS485 communication type *2	MDDLN45SG
		Basic type *2	MDDLN45SE
	Frame symbol		D-frame
Power supply capacity		(kVA)	2.4
Rated output		(W)	1000
Rated torque		(N·m)	4.77
Continuous stall torque		(N·m)	5.25
Momentary Max. peak torque		(N·m)	14.3
Rated current		(A(rms))	5.2
Max. current		(A(o-p))	22
Regenerative brake frequency (times/min) Note)1	Without option		No limit Note)2
	DV0P4284		No limit Note)2
Rated rotational speed		(r/min)	2000
Max. rotational speed		(r/min)	3000
Moment of inertia of rotor ($\times 10^{-4}$ kg·m^2)	Without brake		22.9
	With brake		24.1
Recommended moment of inertia ratio of the load and the rotor Note)3			5 times or less
Rotary encoder specifications *3			23-bit Absolute
	Resolution per single turn		8388608

• Brake specifications (For details, refer to P.305)

(This brake will be released when it is energized. Do not use this for braking the motor in motion.)

Static friction torque (N·m)	13.7 or more
Engaging time (ms)	100 or less
Releasing time (ms) Note)4	50 or less
Exciting current (DC) (A)	0.79
Releasing voltage (DC) (V)	2 or more
Exciting voltage (DC) (V)	24±2.4

• Permissible load (For details, refer to P.304)

During assembly	Radial load P-direction (N)	980
	Thrust load A-direction (N)	588
	Thrust load B-direction (N)	686
During operation	Radial load P-direction (N)	490
	Thrust load A, B-direction (N)	196

• For details of Note)1 to Note)4, refer to P.303.
• Dimensions of Driver, refer to P.58.
*1 □□ in the motor part number represents the motor specifications.
*2 Basic type and RS485 communication type are "Position control type".
Detail of model designation, refer to P.204.
*3 When using a rotary encoder as an incremental system (not using multi-turn data), do not connect a battery for absolute encoder.

Torque characteristics (at AC200 V of power voltage <Dotted line represents the torque at 10 % less supply voltage.>)

With oil seal

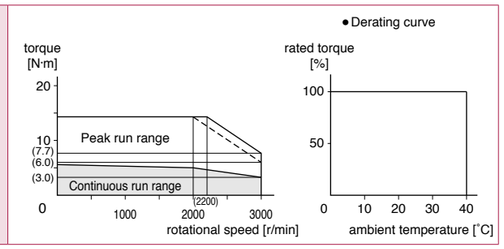

Dimensions

Motor specifications	Key way shaft/ Round shaft					
	without brake			with brake		
	without oil seal	with oil seal	with protective lip/ with oil seal	without oil seal	with oil seal	with protective lip/ with oil seal
Encoder connector Large size (JL10) type	—	P.279		—	P.279	

<Cautions> Reduce the moment of inertia ratio if high speed response operation is required.
Dimensions are subject to change without notice. Contact us or a dealer for the latest information.
Read the Instruction Manual carefully and understand all precautions and remarks before using the products.
Please avoid the motor, or equipment containing the motor to be distributed to Japan, or other regions through Japan.

Special Order Product | 200 V **MHMF 1.5 kW** [High inertia 130 mm sq.] IP67

• Please contact us for more information.

Specifications

			AC200 V
Motor model *1			MHMF152L1□□M
Applicable driver	Model No.	Multifunction type	MDDLT55SF
		RS485 communication type *2	MDDLN55SG
		Basic type *2	MDDLN55SE
	Frame symbol		D-frame
Power supply capacity		(kVA)	2.9
Rated output		(W)	1500
Rated torque		(N·m)	7.16
Continuous stall torque		(N·m)	7.52
Momentary Max. peak torque		(N·m)	21.5
Rated current		(A(rms))	8.0
Max. current		(A(o-p))	34
Regenerative brake frequency (times/min) Note)1	Without option		No limit Note)2
	DV0P4284		No limit Note)2
Rated rotational speed		(r/min)	2000
Max. rotational speed		(r/min)	3000
Moment of inertia of rotor ($\times 10^{-4}$ kg·m^2)	Without brake		33.4
	With brake		34.6
Recommended moment of inertia ratio of the load and the rotor Note)3			5 times or less
Rotary encoder specifications *3			23-bit Absolute
	Resolution per single turn		8388608

• Brake specifications (For details, refer to P.305)

(This brake will be released when it is energized. Do not use this for braking the motor in motion.)

Static friction torque (N·m)	13.7 or more
Engaging time (ms)	100 or less
Releasing time (ms) Note)4	50 or less
Exciting current (DC) (A)	0.79
Releasing voltage (DC) (V)	2 or more
Exciting voltage (DC) (V)	24±2.4

• Permissible load (For details, refer to P.304)

During assembly	Radial load P-direction (N)	980
	Thrust load A-direction (N)	588
	Thrust load B-direction (N)	686
During operation	Radial load P-direction (N)	490
	Thrust load A, B-direction (N)	196

• For details of Note)1 to Note)4, refer to P.303.
• Dimensions of Driver, refer to P.58.
*1 □□ in the motor part number represents the motor specifications.
*2 Basic type and RS485 communication type are "Position control type".
Detail of model designation, refer to P.204.
*3 When using a rotary encoder as an incremental system (not using multi-turn data), do not connect a battery for absolute encoder.

Torque characteristics (at AC200 V of power voltage <Dotted line represents the torque at 10 % less supply voltage.>)

With oil seal

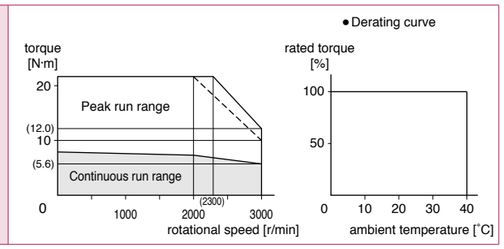

Dimensions

Motor specifications	Key way shaft/ Round shaft					
	without brake			with brake		
	without oil seal	with oil seal	with protective lip/ with oil seal	without oil seal	with oil seal	with protective lip/ with oil seal
Encoder connector Large size (JL10) type	—	P.279		—	P.280	

<Cautions> Reduce the moment of inertia ratio if high speed response operation is required.
Dimensions are subject to change without notice. Contact us or a dealer for the latest information.
Read the Instruction Manual carefully and understand all precautions and remarks before using the products.
Please avoid the motor, or equipment containing the motor to be distributed to Japan, or other regions through Japan.

Special Order Product | 200 V **MHMF 2.0 kW** [High inertia 176 mm sq.] IP67

• Please contact us for more information.

Specifications

			AC200 V
Motor model *1			MHMF202L1□□M
Applicable driver	Model No.	Multifunction type	MEDLT83SF
		RS485 communication type *2	MEDLN83SG
		Basic type *2	MEDLN83SE
	Frame symbol		E-frame
Power supply capacity		(kVA)	3.8
Rated output		(W)	2000
Rated torque		(N·m)	9.55
Continuous stall torque		(N·m)	11.5
Momentary Max. peak torque		(N·m)	28.6
Rated current		(A(rms))	12.5
Max. current		(A(o-p))	53
Regenerative brake frequency (times/min) Note)1	Without option		No limit Note)2
	DV0P4285		No limit Note)2
Rated rotational speed		(r/min)	2000
Max. rotational speed		(r/min)	3000
Moment of inertia of rotor ($\times 10^{-4}$ kg·m^2)	Without brake		55.7
	With brake		61.0
Recommended moment of inertia ratio of the load and the rotor Note)3			5 times or less
Rotary encoder specifications *3			23-bit Absolute
	Resolution per single turn		8388608

• Brake specifications (For details, refer to P.305)

(This brake will be released when it is energized. Do not use this for braking the motor in motion.)

Static friction torque (N·m)	25.0 or more
Engaging time (ms)	80 or less
Releasing time (ms) Note)4	25 or less
Exciting current (DC) (A)	1.29
Releasing voltage (DC) (V)	2 or more
Exciting voltage (DC) (V)	24±2.4

• Permissible load (For details, refer to P.304)

During assembly	Radial load P-direction (N)	1666
	Thrust load A-direction (N)	784
	Thrust load B-direction (N)	980
During operation	Radial load P-direction (N)	784
	Thrust load A, B-direction (N)	343

• For details of Note)1 to Note)4, refer to P.303.
• Dimensions of Driver, refer to P.59.
*1 □□ in the motor part number represents the motor specifications.
*2 Basic type and RS485 communication type are "Position control type".
Detail of model designation, refer to P.204.
*3 When using a rotary encoder as an incremental system (not using multi-turn data), do not connect a battery for absolute encoder.

Torque characteristics (at AC200 V of power voltage <Dotted line represents the torque at 10 % less supply voltage.>)

With oil seal

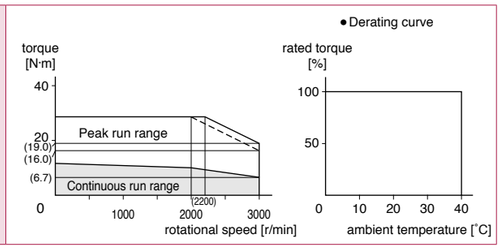

Dimensions

Motor specifications	Key way shaft/ Round shaft					
	without brake			with brake		
	without oil seal	with oil seal	with protective lip/ with oil seal	without oil seal	with oil seal	with protective lip/ with oil seal
Encoder connector Large size (JL10) type	—	P.280		—	P.280	

<Cautions> Reduce the moment of inertia ratio if high speed response operation is required.
Dimensions are subject to change without notice. Contact us or a dealer for the latest information.
Read the Instruction Manual carefully and understand all precautions and remarks before using the products.
Please avoid the motor, or equipment containing the motor to be distributed to Japan, or other regions through Japan.

Special Order Product | 200 V **MHMF 3.0 kW** [High inertia 176 mm sq.] IP67

• Please contact us for more information.

Specifications

			AC200 V
Motor model *1			MHMF302L1□□M
Applicable driver	Model No.	Multifunction type	MFDLTA3SF
		RS485 communication type *2	MFDLNA3SG
		Basic type *2	MFDLNA3SE
	Frame symbol		F-frame
Power supply capacity (kVA)			5.2
Rated output (W)			3000
Rated torque (N·m)			14.3
Continuous stall torque (N·m)			17.2
Momentary Max. peak torque (N·m)			43.0
Rated current (A(rms))			17.0
Max. current (A(o-p))			72
Regenerative brake frequency (times/min) Note)1		Without option	No limit Note)2
		DV0P4285×2	No limit Note)2
Rated rotational speed (r/min)			2000
Max. rotational speed (r/min)			3000
Moment of inertia of rotor ($\times 10^{-4}$ kg·m^2)		Without brake	85.3
		With brake	90.7
Recommended moment of inertia ratio of the load and the rotor Note)3			5 times or less
Rotary encoder specifications *3			23-bit Absolute
	Resolution per single turn		8388608

• **Brake specifications** (For details, refer to P.305)

(This brake will be released when it is energized. Do not use this for braking the motor in motion.)

Static friction torque (N·m)	25.0 or more
Engaging time (ms)	80 or less
Releasing time (ms) Note)4	25 or less
Exciting current (DC) (A)	1.29
Releasing voltage (DC) (V)	2 or more
Exciting voltage (DC) (V)	24±2.4

• **Permissible load** (For details, refer to P.304)

During assembly	Radial load P-direction (N)	1666
	Thrust load A-direction (N)	784
	Thrust load B-direction (N)	980
During operation	Radial load P-direction (N)	784
	Thrust load A, B-direction (N)	343

• For details of Note)1 to Note)4, refer to P.303.
• Dimensions of Driver, refer to P.59.
*1 □□ in the motor part number represents the motor specifications.
*2 Basic type and RS485 communication type are "Position control type".
Detail of model designation, refer to P.204.
*3 When using a rotary encoder as an incremental system (not using multi-turn data), do not connect a battery for absolute encoder.

Torque characteristics (at AC200 V of power voltage <Dotted line represents the torque at 10 % less supply voltage.>)

With oil seal

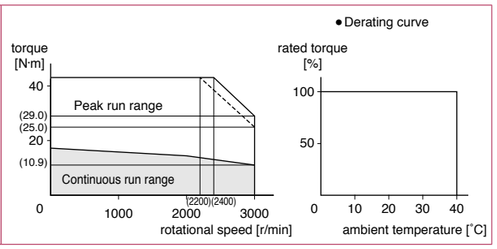

Dimensions

Motor specifications	Key way shaft/ Round shaft					
	without brake			with brake		
	without oil seal	with oil seal	with protective lip/ with oil seal	without oil seal	with oil seal	with protective lip/ with oil seal
Encoder connector Large size (JL10) type	—	P.281		—	P.281	

<Cautions> Reduce the moment of inertia ratio if high speed response operation is required.
Dimensions are subject to change without notice. Contact us or a dealer for the latest information.
Read the Instruction Manual carefully and understand all precautions and remarks before using the products.
Please avoid the motor, or equipment containing the motor to be distributed to Japan, or other regions through Japan.

Special Order Product | 200 V **MHMF 4.0 kW** [High inertia 176 mm sq.] IP67

• Please contact us for more information.

Specifications

			AC200 V
Motor model *1			MHMF402L1□□M
Applicable driver	Model No.	Multifunction type	MFDLTB3SF
		RS485 communication type *2	MFDLNB3SG
		Basic type *2	MFDLNB3SE
	Frame symbol		F-frame
Power supply capacity (kVA)			6.5
Rated output (W)			4000
Rated torque (N·m)			19.1
Continuous stall torque (N·m)			22.0
Momentary Max. peak torque (N·m)			57.3
Rated current (A(rms))			20
Max. current (A(o-p))			85
Regenerative brake frequency (times/min) Note)1		Without option	No limit Note)2
		DV0P4285×2	No limit Note)2
Rated rotational speed (r/min)			2000
Max. rotational speed (r/min)			3000
Moment of inertia of rotor ($\times 10^{-4}$ kg·m^2)		Without brake	104
		With brake	110
Recommended moment of inertia ratio of the load and the rotor Note)3			5 times or less
Rotary encoder specifications *3			23-bit Absolute
	Resolution per single turn		8388608

• **Brake specifications** (For details, refer to P.305)

(This brake will be released when it is energized. Do not use this for braking the motor in motion.)

Static friction torque (N·m)	25.0 or more
Engaging time (ms)	80 or less
Releasing time (ms) Note)4	25 or less
Exciting current (DC) (A)	1.29
Releasing voltage (DC) (V)	2 or more
Exciting voltage (DC) (V)	24±2.4

• **Permissible load** (For details, refer to P.304)

During assembly	Radial load P-direction (N)	1666
	Thrust load A-direction (N)	784
	Thrust load B-direction (N)	980
During operation	Radial load P-direction (N)	784
	Thrust load A, B-direction (N)	343

• For details of Note)1 to Note)4, refer to P.303.
• Dimensions of Driver, refer to P.59.
*1 □□ in the motor part number represents the motor specifications.
*2 Basic type and RS485 communication type are "Position control type".
Detail of model designation, refer to P.204.
*3 When using a rotary encoder as an incremental system (not using multi-turn data), do not connect a battery for absolute encoder.

Torque characteristics (at AC200 V of power voltage <Dotted line represents the torque at 10 % less supply voltage.>)

With oil seal

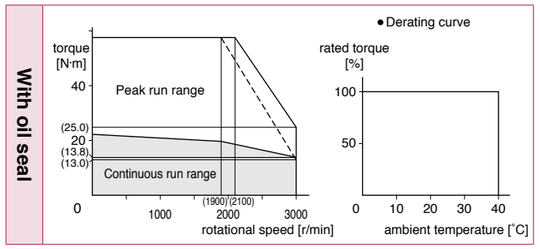

Dimensions

Motor specifications	Key way shaft/ Round shaft					
	without brake			with brake		
	without oil seal	with oil seal	with protective lip/ with oil seal	without oil seal	with oil seal	with protective lip/ with oil seal
Encoder connector Large size (JL10) type	—	P.281		—	P.282	

<Cautions> Reduce the moment of inertia ratio if high speed response operation is required.
Dimensions are subject to change without notice. Contact us or a dealer for the latest information.
Read the Instruction Manual carefully and understand all precautions and remarks before using the products.
Please avoid the motor, or equipment containing the motor to be distributed to Japan, or other regions through Japan.

Special Order Product | 200 V **MHMF 5.0 kW** [High inertia 176 mm sq.] IP67

• Please contact us for more information.

Specifications

			AC200 V
Motor model *1			MHMF502L1□□M
Applicable driver	Model No.	Multifunction type	MFDLTB3SF
		RS485 communication type *2	MFDLNB3SG
		Basic type *2	MFDLNB3SE
	Frame symbol		F-frame
Power supply capacity (kVA)			7.8
Rated output (W)			5000
Rated torque (N·m)			23.9
Continuous stall torque (N·m)			26.3
Momentary Max. peak torque (N·m)			71.6
Rated current (A(rms))			23.3
Max. current (A(o-p))			99
Regenerative brake frequency (times/min) Note)1		Without option	No limit Note)2
		DV0P4285×2	No limit Note)2
Rated rotational speed (r/min)			2000
Max. rotational speed (r/min)			3000
Moment of inertia of rotor ($\times 10^{-4}$ kg·m^2)		Without brake	146
		With brake	151
Recommended moment of inertia ratio of the load and the rotor Note)3			5 times or less
Rotary encoder specifications *3			23-bit Absolute
	Resolution per single turn		8388608

• Brake specifications (For details, refer to P.305)

(This brake will be released when it is energized. Do not use this for braking the motor in motion.)

Static friction torque (N·m)	44.1 or more
Engaging time (ms)	150 or less
Releasing time (ms) Note)4	30 or less
Exciting current (DC) (A)	1.29
Releasing voltage (DC) (V)	2 or more
Exciting voltage (DC) (V)	24±2.4

• Permissible load (For details, refer to P.304)

During assembly	Radial load P-direction (N)	1666
	Thrust load A-direction (N)	784
	Thrust load B-direction (N)	980
During operation	Radial load P-direction (N)	784
	Thrust load A, B-direction (N)	343

• For details of Note)1 to Note)4, refer to P.303.
• Dimensions of Driver, refer to P.59.
*1 □□ in the motor part number represents the motor specifications.
*2 Basic type and RS485 communication type are "Position control type".
Detail of model designation, refer to P.204.
*3 When using a rotary encoder as an incremental system (not using multi-turn data), do not connect a battery for absolute encoder.

Torque characteristics (at AC200 V of power voltage <Dotted line represents the torque at 10 % less supply voltage.>)

With oil seal

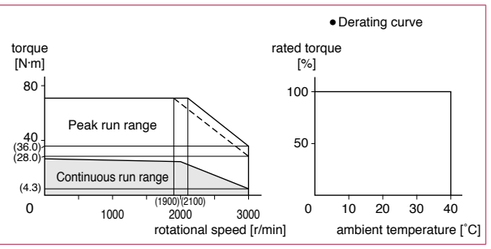

Dimensions

Motor specifications	Key way shaft/ Round shaft					
	without brake			with brake		
	without oil seal	with oil seal	with protective lip/ with oil seal	without oil seal	with oil seal	with protective lip/ with oil seal
Encoder connector Large size (JL10) type	—	P.282		—	P.282	

<Cautions> Reduce the moment of inertia ratio if high speed response operation is required.
Dimensions are subject to change without notice. Contact us or a dealer for the latest information.
Read the Instruction Manual carefully and understand all precautions and remarks before using the products.
Please avoid the motor, or equipment containing the motor to be distributed to Japan, or other regions through Japan.

Special Order Product | 200 V **MHMF 7.5 kW** [High inertia 176 mm sq.] IP67

• Please contact us for more information.

Specifications

			AC200 V
Motor model *1			MHMF752L1□□M
Applicable driver	Model No.	Multifunction type	MGDLTC3SF
		RS485 communication type *2	—
		Basic type *2	—
	Frame symbol		G-frame
Power supply capacity (kVA)			11
Rated output (W)			7500
Rated torque (N·m)			47.8
Continuous stall torque (N·m)			47.8
Momentary Max. peak torque (N·m)			125
Rated current (A(rms))			40.2
Max. current (A(o-p))			154
Regenerative brake frequency (times/min) Note)1		Without option	No limit Note)2
		DV0P4285×3	No limit Note)2
Rated rotational speed (r/min)			1500
Max. rotational speed (r/min)			3000
Moment of inertia of rotor ($\times 10^{-4}$ kg·m^2)		Without brake	272
		With brake	279
Recommended moment of inertia ratio of the load and the rotor Note)3			5 times or less
Rotary encoder specifications *3			23-bit Absolute
	Resolution per single turn		8388608

• Brake specifications (For details, refer to P.305)

(This brake will be released when it is energized. Do not use this for braking the motor in motion.)

Static friction torque (N·m)	63.0 or more
Engaging time (ms)	200 or less
Releasing time (ms) Note)4	80 or less
Exciting current (DC) (A)	1.29
Releasing voltage (DC) (V)	2 or more
Exciting voltage (DC) (V)	24±2.4

• Permissible load (For details, refer to P.304)

During assembly	Radial load P-direction (N)	2058
	Thrust load A-direction (N)	980
	Thrust load B-direction (N)	1176
During operation	Radial load P-direction (N)	1176
	Thrust load A, B-direction (N)	490

• For details of Note)1 to Note)4, refer to P.303.
• Dimensions of Driver, refer to P.60.
*1 □□ in the motor part number represents the motor specifications.
*2 Basic type and RS485 communication type are "Position control type".
Detail of model designation, refer to P.204.
*3 When using a rotary encoder as an incremental system (not using multi-turn data), do not connect a battery for absolute encoder.

Torque characteristics (at AC200 V of power voltage <Dotted line represents the torque at 10 % less supply voltage.>)

With oil seal

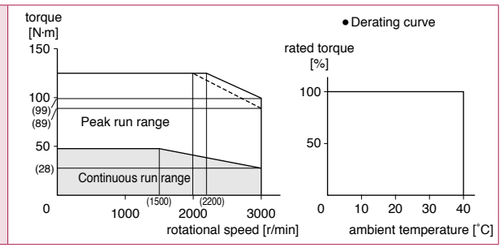

Dimensions

Motor specifications	Key way shaft/ Round shaft					
	without brake			with brake		
	without oil seal	with oil seal	with protective lip/ with oil seal	without oil seal	with oil seal	with protective lip/ with oil seal
Encoder connector Large size (JL10) type	—	P.283	—	—	P.283	—

<Cautions> Reduce the moment of inertia ratio if high speed response operation is required.
Dimensions are subject to change without notice. Contact us or a dealer for the latest information.
Read the Instruction Manual carefully and understand all precautions and remarks before using the products.
Please avoid the motor, or equipment containing the motor to be distributed to Japan, or other regions through Japan.

Special Order Product | 200 V **MDMF 1.0 kW** [Middle inertia 130 mm sq.] IP67

• Please contact us for more information.

Specifications

			AC200 V
Motor model *1			MDMF102L1□□M
Applicable driver	Model No.	Multifunction type	MDDLT45SF
		RS485 communication type *2	MDDLN45SG
		Basic type *2	MDDLN45SE
	Frame symbol		D-frame
Power supply capacity		(kVA)	2.4
Rated output		(W)	1000
Rated torque		(N·m)	4.77
Continuous stall torque		(N·m)	5.25
Momentary Max. peak torque		(N·m)	14.3
Rated current		(A(rms))	5.2
Max. current		(A(o-p))	22
Regenerative brake frequency (times/min) Note)1	Without option		No limit Note)2
	DV0P4284		No limit Note)2
Rated rotational speed		(r/min)	2000
Max. rotational speed		(r/min)	3000
Moment of inertia of rotor ($\times 10^{-4}$ kg·m^2)	Without brake		6.18
	With brake		7.40
Recommended moment of inertia ratio of the load and the rotor Note)3			10 times or less
Rotary encoder specifications *3			23-bit Absolute
	Resolution per single turn		8388608

• **Brake specifications** (For details, refer to P.305)

(This brake will be released when it is energized. Do not use this for braking the motor in motion.)

Static friction torque (N·m)	13.7 or more
Engaging time (ms)	100 or less
Releasing time (ms) Note)4	50 or less
Exciting current (DC) (A)	0.79
Releasing voltage (DC) (V)	2 or more
Exciting voltage (DC) (V)	24±2.4

• **Permissible load** (For details, refer to P.304)

During assembly	Radial load P-direction (N)	980
	Thrust load A-direction (N)	588
	Thrust load B-direction (N)	686
During operation	Radial load P-direction (N)	490
	Thrust load A, B-direction (N)	196

• For details of Note)1 to Note)4, refer to P.303.
• Dimensions of Driver, refer to P.58.
*1 □□ in the motor part number represents the motor specifications.
*2 Basic type and RS485 communication type are "Position control type".
Detail of model designation, refer to P.204.
*3 When using a rotary encoder as an incremental system (not using multi-turn data), do not connect a battery for absolute encoder.

Torque characteristics (at AC200 V of power voltage <Dotted line represents the torque at 10 % less supply voltage.>)

With oil seal

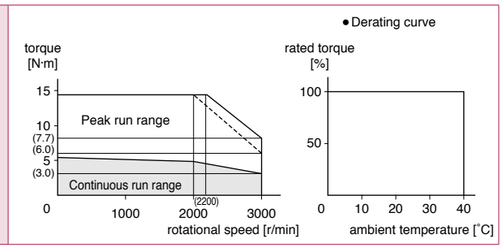

Dimensions

Motor specifications	Key way shaft/ Round shaft					
	without brake			with brake		
	without oil seal	with oil seal	with protective lip/ with oil seal	without oil seal	with oil seal	with protective lip/ with oil seal
Encoder connector Large size (JL10) type	—	P.283		—	P.284	

<Cautions> Reduce the moment of inertia ratio if high speed response operation is required.
Dimensions are subject to change without notice. Contact us or a dealer for the latest information.
Read the Instruction Manual carefully and understand all precautions and remarks before using the products.
Please avoid the motor, or equipment containing the motor to be distributed to Japan, or other regions through Japan.

• Please contact us for more information.

Specifications

			AC200 V
Motor model *1			MDMF152L1□□M
Applicable driver	Model No.	Multifunction type	MDDLT55SF
		RS485 communication type *2	MDDLN55SG
		Basic type *2	MDDLN55SE
	Frame symbol		D-frame
Power supply capacity		(kVA)	2.9
Rated output		(W)	1500
Rated torque		(N·m)	7.16
Continuous stall torque		(N·m)	7.52
Momentary Max. peak torque		(N·m)	21.5
Rated current		(A(rms))	8.0
Max. current		(A(o-p))	34
Regenerative brake frequency (times/min) Note)1	Without option		No limit Note)2
	DV0P4284		No limit Note)2
Rated rotational speed		(r/min)	2000
Max. rotational speed		(r/min)	3000
Moment of inertia of rotor ($\times 10^{-4}$ kg·m^2)	Without brake		9.16
	With brake		10.4
Recommended moment of inertia ratio of the load and the rotor Note)3			10 times or less
Rotary encoder specifications *3			23-bit Absolute
	Resolution per single turn		8388608

• **Brake specifications** (For details, refer to P.305)

(This brake will be released when it is energized. Do not use this for braking the motor in motion.)

Static friction torque (N·m)	13.7 or more
Engaging time (ms)	100 or less
Releasing time (ms) Note)4	50 or less
Exciting current (DC) (A)	0.79
Releasing voltage (DC) (V)	2 or more
Exciting voltage (DC) (V)	24±2.4

• **Permissible load** (For details, refer to P.304)

During assembly	Radial load P-direction (N)	980
	Thrust load A-direction (N)	588
	Thrust load B-direction (N)	686
During operation	Radial load P-direction (N)	490
	Thrust load A, B-direction (N)	196

• For details of Note)1 to Note)4, refer to P.303.
• Dimensions of Driver, refer to P.58.
*1 □□ in the motor part number represents the motor specifications.
*2 Basic type and RS485 communication type are "Position control type".
Detail of model designation, refer to P.204.
*3 When using a rotary encoder as an incremental system (not using multi-turn data), do not connect a battery for absolute encoder.

Torque characteristics (at AC200 V of power voltage <Dotted line represents the torque at 10 % less supply voltage.>)

With oil seal

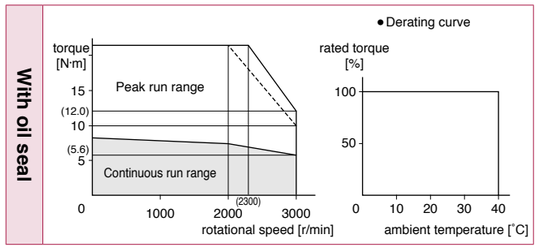

Dimensions

Motor specifications	Key way shaft/ Round shaft					
	without brake			with brake		
	without oil seal	with oil seal	with protective lip/ with oil seal	without oil seal	with oil seal	with protective lip/ with oil seal
Encoder connector Large size (JL10) type	—	P.284		—	P.284	

<Cautions> Reduce the moment of inertia ratio if high speed response operation is required.
Dimensions are subject to change without notice. Contact us or a dealer for the latest information.
Read the Instruction Manual carefully and understand all precautions and remarks before using the products.
Please avoid the motor, or equipment containing the motor to be distributed to Japan, or other regions through Japan.

Special Order Product | 200 V **MDMF 2.0 kW** [Middle inertia 130 mm sq.] IP67

• Please contact us for more information.

Specifications

			AC200 V
Motor model *1			MDMF202L1□□M
Applicable driver	Model No.	Multifunction type	MEDLT83SF
		RS485 communication type *2	MEDLN83SG
		Basic type *2	MEDLN83SE
	Frame symbol		E-frame
Power supply capacity (kVA)			3.8
Rated output (W)			2000
Rated torque (N·m)			9.55
Continuous stall torque (N·m)			10.0
Momentary Max. peak torque (N·m)			28.6
Rated current (A(rms))			9.9
Max. current (A(o-p))			42
Regenerative brake frequency (times/min) Note)1		Without option	No limit Note)2
		DV0P4285	No limit Note)2
Rated rotational speed (r/min)			2000
Max. rotational speed (r/min)			3000
Moment of inertia of rotor ($\times 10^{-4}$ kg·m^2)		Without brake	12.1
		With brake	13.3
Recommended moment of inertia ratio of the load and the rotor Note)3			10 times or less
Rotary encoder specifications *3			23-bit Absolute
	Resolution per single turn		8388608

• Brake specifications (For details, refer to P.305)

(This brake will be released when it is energized. Do not use this for braking the motor in motion.)

Static friction torque (N·m)	13.7 or more
Engaging time (ms)	100 or less
Releasing time (ms) Note)4	50 or less
Exciting current (DC) (A)	0.79
Releasing voltage (DC) (V)	2 or more
Exciting voltage (DC) (V)	24±2.4

• Permissible load (For details, refer to P.304)

During assembly	Radial load P-direction (N)	980
	Thrust load A-direction (N)	588
	Thrust load B-direction (N)	686
During operation	Radial load P-direction (N)	490
	Thrust load A, B-direction (N)	196

- For details of Note)1 to Note)4, refer to P.303.
- Dimensions of Driver, refer to P.59.

*1 □□ in the motor part number represents the motor specifications.

*2 Basic type and RS485 communication type are "Position control type". Detail of model designation, refer to P.204.

*3 When using a rotary encoder as an incremental system (not using multi-turn data), do not connect a battery for absolute encoder.

Torque characteristics (at AC200 V of power voltage <Dotted line represents the torque at 10 % less supply voltage.>)

With oil seal

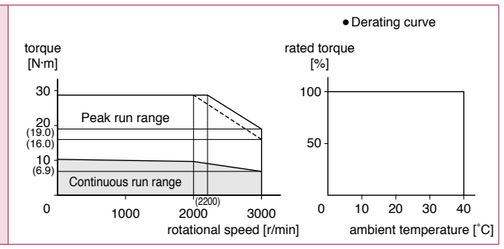

Dimensions

Motor specifications	Key way shaft/ Round shaft					
	without brake			with brake		
	without oil seal	with oil seal	with protective lip/ with oil seal	without oil seal	with oil seal	with protective lip/ with oil seal
Encoder connector Large size (JL10) type	—	P.285		—	P.285	

<Cautions> Reduce the moment of inertia ratio if high speed response operation is required.
Dimensions are subject to change without notice. Contact us or a dealer for the latest information.
Read the Instruction Manual carefully and understand all precautions and remarks before using the products.
Please avoid the motor, or equipment containing the motor to be distributed to Japan, or other regions through Japan.

• Please contact us for more information.

Specifications

			AC200 V
Motor model *1			MDMF302L1□□M
Applicable driver	Model No.	Multifunction type	MFDLTA3SF
		RS485 communication type *2	MFDLNA3SG
		Basic type *2	MFDLNA3SE
	Frame symbol		F-frame
Power supply capacity (kVA)			5.2
Rated output (W)			3000
Rated torque (N·m)			14.3
Continuous stall torque (N·m)			15.0
Momentary Max. peak torque (N·m)			43.0
Rated current (A(rms))			16.4
Max. current (A(o-p))			70
Regenerative brake frequency (times/min) Note)1		Without option	No limit Note)2
		DV0P4285×2	No limit Note)2
Rated rotational speed (r/min)			2000
Max. rotational speed (r/min)			3000
Moment of inertia of rotor ($\times 10^{-4}$ kg·m^2)		Without brake	18.6
		With brake	19.6
Recommended moment of inertia ratio of the load and the rotor Note)3			10 times or less
Rotary encoder specifications *3			23-bit Absolute
	Resolution per single turn		8388608

• Brake specifications (For details, refer to P.305)

(This brake will be released when it is energized. Do not use this for braking the motor in motion.)

Static friction torque (N·m)	22.0 or more
Engaging time (ms)	110 or less
Releasing time (ms) Note)4	50 or less
Exciting current (DC) (A)	0.90
Releasing voltage (DC) (V)	2 or more
Exciting voltage (DC) (V)	24±2.4

• Permissible load (For details, refer to P.304)

During assembly	Radial load P-direction (N)	980
	Thrust load A-direction (N)	588
	Thrust load B-direction (N)	686
During operation	Radial load P-direction (N)	784
	Thrust load A, B-direction (N)	343

- For details of Note)1 to Note)4, refer to P.303.
- Dimensions of Driver, refer to P.59.

*1 □□ in the motor part number represents the motor specifications.

*2 Basic type and RS485 communication type are "Position control type". Detail of model designation, refer to P.204.

*3 When using a rotary encoder as an incremental system (not using multi-turn data), do not connect a battery for absolute encoder.

Torque characteristics (at AC200 V of power voltage <Dotted line represents the torque at 10 % less supply voltage.>)

With oil seal

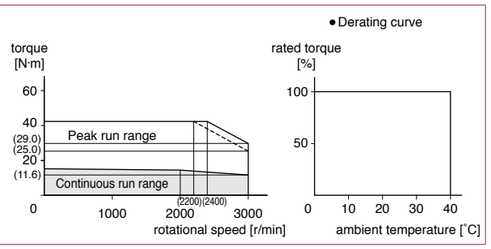

Dimensions

Motor specifications	Key way shaft/ Round shaft					
	without brake			with brake		
	without oil seal	with oil seal	with protective lip/ with oil seal	without oil seal	with oil seal	with protective lip/ with oil seal
Encoder connector Large size (JL10) type	—	P.285		—	P.286	

<Cautions> Reduce the moment of inertia ratio if high speed response operation is required.
Dimensions are subject to change without notice. Contact us or a dealer for the latest information.
Read the Instruction Manual carefully and understand all precautions and remarks before using the products.
Please avoid the motor, or equipment containing the motor to be distributed to Japan, or other regions through Japan.

Special Order Product 200 V MDMF 4.0 kW [Middle inertia 176 mm sq.] IP67

• Please contact us for more information.

Specifications

			AC200 V
Motor model *1			MDMF402L1□□M
Applicable driver	Model No.	Multifunction type	MFDLTB3SF
		RS485 communication type *2	MFDLNB3SG
		Basic type *2	MFDLNB3SE
	Frame symbol		F-frame
Power supply capacity (kVA)			6.5
Rated output (W)			4000
Rated torque (N·m)			19.1
Continuous stall torque (N·m)			22.0
Momentary Max. peak torque (N·m)			57.3
Rated current (A(rms))			20.0
Max. current (A(o-p))			85
Regenerative brake frequency (times/min) Note)1		Without option	No limit Note)2
		DV0P4285×2	No limit Note)2
Rated rotational speed (r/min)			2000
Max. rotational speed (r/min)			3000
Moment of inertia of rotor ($\times 10^{-4}$ kg·m^2)		Without brake	46.9
		With brake	52.3
Recommended moment of inertia ratio of the load and the rotor Note)3			10 times or less
Rotary encoder specifications *3			23-bit Absolute
	Resolution per single turn		8388608

- **Brake specifications** (For details, refer to P.305)

(This brake will be released when it is energized. Do not use this for braking the motor in motion.)

Static friction torque (N·m)	25.0 or more
Engaging time (ms)	80 or less
Releasing time (ms) Note)4	25 or less
Exciting current (DC) (A)	1.29
Releasing voltage (DC) (V)	2 or more
Exciting voltage (DC) (V)	24±2.4

- **Permissible load** (For details, refer to P.304)

During assembly	Radial load P-direction (N)	1666
	Thrust load A-direction (N)	784
	Thrust load B-direction (N)	980
During operation	Radial load P-direction (N)	784
	Thrust load A, B-direction (N)	343

• For details of Note)1 to Note)4, refer to P.303.
• Dimensions of Driver, refer to P.59.
*1 □□ in the motor part number represents the motor specifications.
*2 Basic type and RS485 communication type are "Position control type".
Detail of model designation, refer to P.204.
*3 When using a rotary encoder as an incremental system (not using multi-turn data), do not connect a battery for absolute encoder.

Torque characteristics (at AC200 V of power voltage <Dotted line represents the torque at 10 % less supply voltage.>)

With oil seal

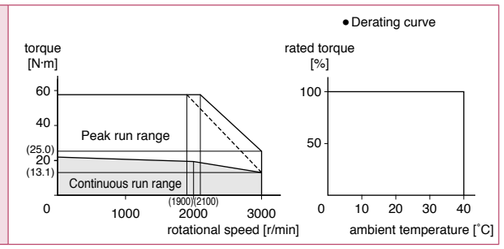

Dimensions

Motor specifications	Key way shaft/ Round shaft					
	without brake			with brake		
	without oil seal	with oil seal	with protective lip/ with oil seal	without oil seal	with oil seal	with protective lip/ with oil seal
Encoder connector Large size (JL10) type	—	P.286		—	P.286	

<Cautions> Reduce the moment of inertia ratio if high speed response operation is required.
Dimensions are subject to change without notice. Contact us or a dealer for the latest information.
Read the Instruction Manual carefully and understand all precautions and remarks before using the products.
Please avoid the motor, or equipment containing the motor to be distributed to Japan, or other regions through Japan.

• Please contact us for more information.

Specifications

			AC200 V
Motor model *1			MDMF502L1□□M
Applicable driver	Model No.	Multifunction type	MFDLTB3SF
		RS485 communication type *2	MFDLNB3SG
		Basic type *2	MFDLNB3SE
	Frame symbol		F-frame
Power supply capacity (kVA)			7.8
Rated output (W)			5000
Rated torque (N·m)			23.9
Continuous stall torque (N·m)			26.3
Momentary Max. peak torque (N·m)			71.6
Rated current (A(rms))			23.3
Max. current (A(o-p))			99
Regenerative brake frequency (times/min) Note)1		Without option	No limit Note)2
		DV0P4285×2	No limit Note)2
Rated rotational speed (r/min)			2000
Max. rotational speed (r/min)			3000
Moment of inertia of rotor ($\times 10^{-4}$ kg·m^2)		Without brake	58.2
		With brake	63.0
Recommended moment of inertia ratio of the load and the rotor Note)3			10 times or less
Rotary encoder specifications *3			23-bit Absolute
	Resolution per single turn		8388608

- **Brake specifications** (For details, refer to P.305)

(This brake will be released when it is energized. Do not use this for braking the motor in motion.)

Static friction torque (N·m)	44.1 or more
Engaging time (ms)	150 or less
Releasing time (ms) Note)4	30 or less
Exciting current (DC) (A)	1.29
Releasing voltage (DC) (V)	2 or more
Exciting voltage (DC) (V)	24±2.4

- **Permissible load** (For details, refer to P.304)

During assembly	Radial load P-direction (N)	1666
	Thrust load A-direction (N)	784
	Thrust load B-direction (N)	980
During operation	Radial load P-direction (N)	784
	Thrust load A, B-direction (N)	343

• For details of Note)1 to Note)4, refer to P.303.
• Dimensions of Driver, refer to P.59.
*1 □□ in the motor part number represents the motor specifications.
*2 Basic type and RS485 communication type are "Position control type".
Detail of model designation, refer to P.204.
*3 When using a rotary encoder as an incremental system (not using multi-turn data), do not connect a battery for absolute encoder.

Torque characteristics (at AC200 V of power voltage <Dotted line represents the torque at 10 % less supply voltage.>)

With oil seal

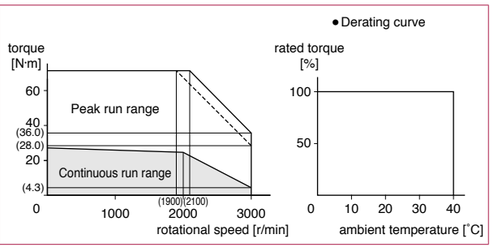

Dimensions

Motor specifications	Key way shaft/ Round shaft					
	without brake			with brake		
	without oil seal	with oil seal	with protective lip/ with oil seal	without oil seal	with oil seal	with protective lip/ with oil seal
Encoder connector Large size (JL10) type	—	P.287		—	P.287	

<Cautions> Reduce the moment of inertia ratio if high speed response operation is required.
Dimensions are subject to change without notice. Contact us or a dealer for the latest information.
Read the Instruction Manual carefully and understand all precautions and remarks before using the products.
Please avoid the motor, or equipment containing the motor to be distributed to Japan, or other regions through Japan.

Special Order Product | 200 V **MDMF 7.5 kW** [Middle inertia 176 mm sq.] IP67

• Please contact us for more information.

Specifications

			AC200 V
Motor model *1			MDMF752L1□□M
Applicable driver	Model No.	Multifunction type	MGDLTC3SF
		RS485 communication type *2	—
		Basic type *2	—
	Frame symbol		G-frame
Power supply capacity		(kVA)	11
Rated output		(W)	7500
Rated torque		(N·m)	47.8
Continuous stall torque		(N·m)	47.8
Momentary Max. peak torque		(N·m)	125
Rated current		(A(rms))	40.2
Max. current		(A(o-p))	154
Regenerative brake frequency (times/min) Note)1	Without option		No limit Note)2
	DV0P4285×3		No limit Note)2
Rated rotational speed		(r/min)	1500
Max. rotational speed		(r/min)	3000
Moment of inertia of rotor ($\times 10^{-4}$ kg·m^2)	Without brake		122
	With brake		127
Recommended moment of inertia ratio of the load and the rotor Note)3			10 times or less
Rotary encoder specifications *3			23-bit Absolute
	Resolution per single turn		8388608

• **Brake specifications** (For details, refer to P.305)

(This brake will be released when it is energized. Do not use this for braking the motor in motion.)

Static friction torque (N·m)	63.0 or more
Engaging time (ms)	200 or less
Releasing time (ms) Note)4	80 or less
Exciting current (DC) (A)	1.29
Releasing voltage (DC) (V)	2 or more
Exciting voltage (DC) (V)	24±2.4

• **Permissible load** (For details, refer to P.304)

During assembly	Radial load P-direction (N)	2058
	Thrust load A-direction (N)	980
	Thrust load B-direction (N)	1176
During operation	Radial load P-direction (N)	1176
	Thrust load A, B-direction (N)	490

• For details of Note)1 to Note)4, refer to P.303.
• Dimensions of Driver, refer to P.60.
*1 □□ in the motor part number represents the motor specifications.
*2 Basic type and RS485 communication type are "Position control type".
Detail of model designation, refer to P.204.
*3 When using a rotary encoder as an incremental system (not using multi-turn data), do not connect a battery for absolute encoder.

Torque characteristics (at AC200 V of power voltage <Dotted line represents the torque at 10 % less supply voltage.>)

With oil seal

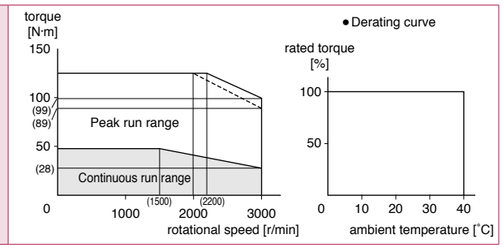

Dimensions

Motor specifications	Key way shaft/ Round shaft					
	without brake			with brake		
	without oil seal	with oil seal	with protective lip/ with oil seal	without oil seal	with oil seal	with protective lip/ with oil seal
Encoder connector Large size (JL10) type	—	P.287	—	—	P.288	—

<Cautions> Reduce the moment of inertia ratio if high speed response operation is required.
Dimensions are subject to change without notice. Contact us or a dealer for the latest information.
Read the Instruction Manual carefully and understand all precautions and remarks before using the products.
Please avoid the motor, or equipment containing the motor to be distributed to Japan, or other regions through Japan.

Special Order Product | 200 V **MGMF 0.85 kW** [Middle inertia Low speed/ High torque type 130 mm sq.] IP67

• Please contact us for more information.

Specifications

			AC200 V
Motor model *1			MGMF092L1□□M
Applicable driver	Model No.	Multifunction type	MDDLT45SF
		RS485 communication type *2	MDDLN45SG
		Basic type *2	MDDLN45SE
	Frame symbol		D-frame
Power supply capacity		(kVA)	2.0
Rated output		(W)	850
Rated torque		(N·m)	5.41
Continuous stall torque		(N·m)	5.41
Momentary Max. peak torque		(N·m)	14.3
Rated current		(A(rms))	5.9
Max. current		(A(o-p))	22
Regenerative brake frequency (times/min) Note)1	Without option		No limit Note)2
	DV0P4284		No limit Note)2
Rated rotational speed		(r/min)	1500
Max. rotational speed		(r/min)	3000
Moment of inertia of rotor ($\times 10^{-4}$ kg·m^2)	Without brake		6.18
	With brake		7.40
Recommended moment of inertia ratio of the load and the rotor Note)3			10 times or less
Rotary encoder specifications *3			23-bit Absolute
	Resolution per single turn		8388608

• **Brake specifications** (For details, refer to P.305)

(This brake will be released when it is energized. Do not use this for braking the motor in motion.)

Static friction torque (N·m)	13.7 or more
Engaging time (ms)	100 or less
Releasing time (ms) Note)4	50 or less
Exciting current (DC) (A)	0.79
Releasing voltage (DC) (V)	2 or more
Exciting voltage (DC) (V)	24±2.4

• **Permissible load** (For details, refer to P.304)

During assembly	Radial load P-direction (N)	980
	Thrust load A-direction (N)	588
	Thrust load B-direction (N)	686
During operation	Radial load P-direction (N)	686
	Thrust load A, B-direction (N)	196

• For details of Note)1 to Note)4, refer to P.303.
• Dimensions of Driver, refer to P.58.
*1 □□ in the motor part number represents the motor specifications.
*2 Basic type and RS485 communication type are "Position control type".
Detail of model designation, refer to P.204.
*3 When using a rotary encoder as an incremental system (not using multi-turn data), do not connect a battery for absolute encoder.

Torque characteristics (at AC200 V of power voltage <Dotted line represents the torque at 10 % less supply voltage.>)

With oil seal

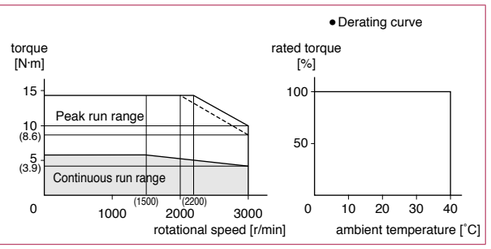

Dimensions

Motor specifications	Key way shaft/ Round shaft					
	without brake			with brake		
	without oil seal	with oil seal	with protective lip/ with oil seal	without oil seal	with oil seal	with protective lip/ with oil seal
Encoder connector Large size (JL10) type	—	P.288		—	P.288	

<Cautions> Reduce the moment of inertia ratio if high speed response operation is required.
Dimensions are subject to change without notice. Contact us or a dealer for the latest information.
Read the Instruction Manual carefully and understand all precautions and remarks before using the products.
Please avoid the motor, or equipment containing the motor to be distributed to Japan, or other regions through Japan.

Special Order Product | 200 V **MGMF 1.3 kW** [Middle inertia Low speed/ High torque type 130 mm sq.] IP67

• Please contact us for more information.

Specifications

			AC200 V
Motor model *1			MGMF132L1□□M
Applicable driver	Model No.	Multifunction type	MDDLT55SF
		RS485 communication type *2	MDDLN55SG
		Basic type *2	MDDLN55SE
	Frame symbol		D-frame
Power supply capacity		(kVA)	2.6
Rated output		(W)	1300
Rated torque		(N·m)	8.28
Continuous stall torque		(N·m)	8.28
Momentary Max. peak torque		(N·m)	23.3
Rated current		(A(rms))	9.3
Max. current		(A(o-p))	37
Regenerative brake frequency (times/min) Note)1	Without option		No limit Note)2
	DV0P4284		No limit Note)2
Rated rotational speed		(r/min)	1500
Max. rotational speed		(r/min)	3000
Moment of inertia of rotor ($\times 10^{-4}$ kg·m^2)	Without brake		9.16
	With brake		10.4
Recommended moment of inertia ratio of the load and the rotor Note)3			10 times or less
Rotary encoder specifications *3			23-bit Absolute
	Resolution per single turn		8388608

• Brake specifications (For details, refer to P.305)

(This brake will be released when it is energized. Do not use this for braking the motor in motion.)

Static friction torque (N·m)	13.7 or more
Engaging time (ms)	100 or less
Releasing time (ms) Note)4	50 or less
Exciting current (DC) (A)	0.79
Releasing voltage (DC) (V)	2 or more
Exciting voltage (DC) (V)	24±2.4

• Permissible load (For details, refer to P.304)

During assembly	Radial load P-direction (N)	980
	Thrust load A-direction (N)	588
	Thrust load B-direction (N)	686
During operation	Radial load P-direction (N)	686
	Thrust load A, B-direction (N)	196

• For details of Note)1 to Note)4, refer to P.303.
• Dimensions of Driver, refer to P.58.
*1 □□ in the motor part number represents the motor specifications.
*2 Basic type and RS485 communication type are "Position control type". Detail of model designation, refer to P.204.
*3 When using a rotary encoder as an incremental system (not using multi-turn data), do not connect a battery for absolute encoder.

Torque characteristics (at AC200 V of power voltage <Dotted line represents the torque at 10 % less supply voltage.>)

With oil seal

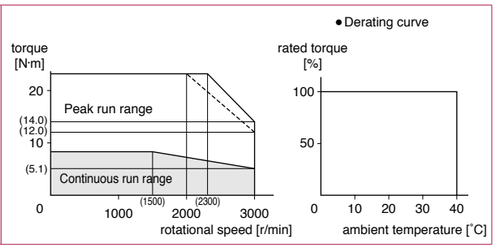

Dimensions

Motor specifications	Key way shaft/ Round shaft					
	without brake			with brake		
	without oil seal	with oil seal	with protective lip/ with oil seal	without oil seal	with oil seal	with protective lip/ with oil seal
Encoder connector Large size (JL10) type	—	P.289		—	P.289	

<Cautions> Reduce the moment of inertia ratio if high speed response operation is required.
Dimensions are subject to change without notice. Contact us or a dealer for the latest information.
Read the Instruction Manual carefully and understand all precautions and remarks before using the products.
Please avoid the motor, or equipment containing the motor to be distributed to Japan, or other regions through Japan.

Special Order Product | 200 V **MGMF 1.8 kW** [Middle inertia Low speed/ High torque type 130 mm sq.] IP67

• Please contact us for more information.

Specifications

			AC200 V
Motor model *1			MGMF182L1□□M
Applicable driver	Model No.	Multifunction type	MEDLT83SF
		RS485 communication type *2	MEDLN83SG
		Basic type *2	MEDLN83SE
	Frame symbol		E-frame
Power supply capacity		(kVA)	3.4
Rated output		(W)	1800
Rated torque		(N·m)	11.5
Continuous stall torque		(N·m)	11.5
Momentary Max. peak torque		(N·m)	28.7
Rated current		(A(rms))	11.8
Max. current		(A(o-p))	42
Regenerative brake frequency (times/min) Note)1	Without option		No limit Note)2
	DV0P4285×2		No limit Note)2
Rated rotational speed		(r/min)	1500
Max. rotational speed		(r/min)	3000
Moment of inertia of rotor ($\times 10^{-4}$ kg·m^2)	Without brake		12.1
	With brake		13.3
Recommended moment of inertia ratio of the load and the rotor Note)3			10 times or less
Rotary encoder specifications *3			23-bit Absolute
	Resolution per single turn		8388608

• Brake specifications (For details, refer to P.305)

(This brake will be released when it is energized. Do not use this for braking the motor in motion.)

Static friction torque (N·m)	13.7 or more
Engaging time (ms)	100 or less
Releasing time (ms) Note)4	50 or less
Exciting current (DC) (A)	0.79
Releasing voltage (DC) (V)	2 or more
Exciting voltage (DC) (V)	24±2.4

• Permissible load (For details, refer to P.304)

During assembly	Radial load P-direction (N)	980
	Thrust load A-direction (N)	588
	Thrust load B-direction (N)	686
During operation	Radial load P-direction (N)	686
	Thrust load A, B-direction (N)	196

• For details of Note)1 to Note)4, refer to P.303.
• Dimensions of Driver, refer to P.59.
*1 □□ in the motor part number represents the motor specifications.
*2 Basic type and RS485 communication type are "Position control type". Detail of model designation, refer to P.204.
*3 When using a rotary encoder as an incremental system (not using multi-turn data), do not connect a battery for absolute encoder.

Torque characteristics (at AC200 V of power voltage <Dotted line represents the torque at 10 % less supply voltage.>)

With oil seal

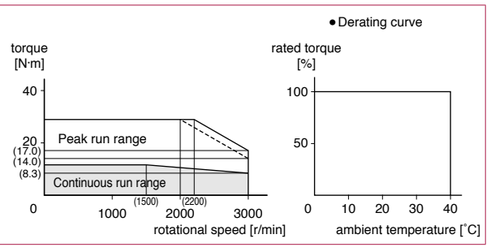

Dimensions

Motor specifications	Key way shaft/ Round shaft					
	without brake			with brake		
	without oil seal	with oil seal	with protective lip/ with oil seal	without oil seal	with oil seal	with protective lip/ with oil seal
Encoder connector Large size (JL10) type	—	P.289		—	P.290	

<Cautions> Reduce the moment of inertia ratio if high speed response operation is required.
Dimensions are subject to change without notice. Contact us or a dealer for the latest information.
Read the Instruction Manual carefully and understand all precautions and remarks before using the products.
Please avoid the motor, or equipment containing the motor to be distributed to Japan, or other regions through Japan.

Special Order Product | 200 V **MGMF 2.4 kW** [Middle inertia Low speed/ High torque type 176 mm sq.] IP67

• Please contact us for more information.

Specifications

			AC200 V
Motor model *1			MGMF242L1□□M
Applicable driver	Model No.	Multifunction type	MEDLT93SF
		RS485 communication type *2	MEDLN93SG
		Basic type *2	MEDLN93SE
	Frame symbol		E-frame
Power supply capacity		(kVA)	4.5
Rated output		(W)	2400
Rated torque		(N·m)	15.3
Continuous stall torque		(N·m)	15.3
Momentary Max. peak torque		(N·m)	45.2
Rated current		(A(rms))	16.0
Max. current		(A(o-p))	67
Regenerative brake frequency (times/min) Note)1	Without option		No limit Note)2
	DV0P4285×2		No limit Note)2
Rated rotational speed		(r/min)	1500
Max. rotational speed		(r/min)	3000
Moment of inertia of rotor ($\times 10^{-4}$ kg·m^2)	Without brake		46.9
	With brake		52.3
Recommended moment of inertia ratio of the load and the rotor Note)3			10 times or less
Rotary encoder specifications *3			23-bit Absolute
	Resolution per single turn		8388608

• Brake specifications (For details, refer to P.305)

(This brake will be released when it is energized. Do not use this for braking the motor in motion.)

Static friction torque (N·m)	25.0 or more
Engaging time (ms)	80 or less
Releasing time (ms) Note)4	25 or less
Exciting current (DC) (A)	1.29
Releasing voltage (DC) (V)	2 or more
Exciting voltage (DC) (V)	24±2.4

• Permissible load (For details, refer to P.304)

During assembly	Radial load P-direction (N)	1666
	Thrust load A-direction (N)	784
	Thrust load B-direction (N)	980
During operation	Radial load P-direction (N)	1176
	Thrust load A, B-direction (N)	490

• For details of Note)1 to Note)4, refer to P.303.
• Dimensions of Driver, refer to P.59.
*1 □□ in the motor part number represents the motor specifications.
*2 Basic type and RS485 communication type are "Position control type".
Detail of model designation, refer to P.204.
*3 When using a rotary encoder as an incremental system (not using multi-turn data), do not connect a battery for absolute encoder.

Torque characteristics (at AC200 V of power voltage <Dotted line represents the torque at 10 % less supply voltage.>)

With oil seal

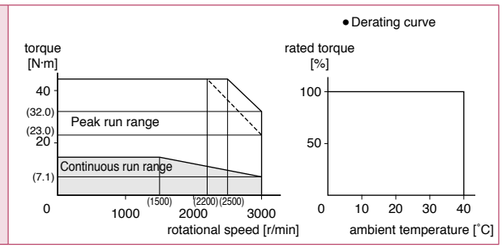

Dimensions

Motor specifications	Key way shaft/ Round shaft					
	without brake			with brake		
	without oil seal	with oil seal	with protective lip/ with oil seal	without oil seal	with oil seal	with protective lip/ with oil seal
Encoder connector Large size (JL10) type	—	P.290		—	P.290	

<Cautions> Reduce the moment of inertia ratio if high speed response operation is required.
Dimensions are subject to change without notice. Contact us or a dealer for the latest information.
Read the Instruction Manual carefully and understand all precautions and remarks before using the products.
Please avoid the motor, or equipment containing the motor to be distributed to Japan, or other regions through Japan.

Special Order Product | 200 V **MGMF 2.9 kW** [Middle inertia Low speed/ High torque type 176 mm sq.] IP67

• Please contact us for more information.

Specifications

			AC200 V
Motor model *1			MGMF292L1□□M
Applicable driver	Model No.	Multifunction type	MFDLTB3SF
		RS485 communication type *2	MFDLNB3SG
		Basic type *2	MFDLNB3SE
	Frame symbol		F-frame
Power supply capacity		(kVA)	5.0
Rated output		(W)	2900
Rated torque		(N·m)	18.5
Continuous stall torque		(N·m)	18.5
Momentary Max. peak torque		(N·m)	45.2
Rated current		(A(rms))	19.3
Max. current		(A(o-p))	67
Regenerative brake frequency (times/min) Note)1	Without option		No limit Note)2
	DV0P4285×2		No limit Note)2
Rated rotational speed		(r/min)	1500
Max. rotational speed		(r/min)	3000
Moment of inertia of rotor ($\times 10^{-4}$ kg·m^2)	Without brake		46.9
	With brake		52.3
Recommended moment of inertia ratio of the load and the rotor Note)3			10 times or less
Rotary encoder specifications *3			23-bit Absolute
	Resolution per single turn		8388608

• Brake specifications (For details, refer to P.305)

(This brake will be released when it is energized. Do not use this for braking the motor in motion.)

Static friction torque (N·m)	25.0 or more
Engaging time (ms)	80 or less
Releasing time (ms) Note)4	25 or less
Exciting current (DC) (A)	1.29
Releasing voltage (DC) (V)	2 or more
Exciting voltage (DC) (V)	24±2.4

• Permissible load (For details, refer to P.304)

During assembly	Radial load P-direction (N)	1666
	Thrust load A-direction (N)	784
	Thrust load B-direction (N)	980
During operation	Radial load P-direction (N)	1176
	Thrust load A, B-direction (N)	490

• For details of Note)1 to Note)4, refer to P.303.
• Dimensions of Driver, refer to P.59.
*1 □□ in the motor part number represents the motor specifications.
*2 Basic type and RS485 communication type are "Position control type".
Detail of model designation, refer to P.204.
*3 When using a rotary encoder as an incremental system (not using multi-turn data), do not connect a battery for absolute encoder.

Torque characteristics (at AC200 V of power voltage <Dotted line represents the torque at 10 % less supply voltage.>)

With oil seal

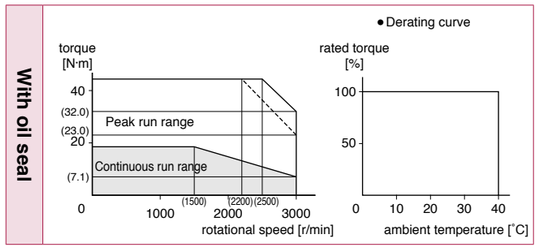

Dimensions

Motor specifications	Key way shaft/ Round shaft					
	without brake			with brake		
	without oil seal	with oil seal	with protective lip/ with oil seal	without oil seal	with oil seal	with protective lip/ with oil seal
Encoder connector Large size (JL10) type	—	P.291		—	P.291	

<Cautions> Reduce the moment of inertia ratio if high speed response operation is required.
Dimensions are subject to change without notice. Contact us or a dealer for the latest information.
Read the Instruction Manual carefully and understand all precautions and remarks before using the products.
Please avoid the motor, or equipment containing the motor to be distributed to Japan, or other regions through Japan.

Special Order Product | 200 V **MGMF 4.4 kW** [Middle inertia Low speed/ High torque type 176 mm sq.] IP67

• Please contact us for more information.

Specifications

			AC200 V
Motor model *1			MGMF442L1□□M
Applicable driver	Model No.	Multifunction type	MFDLTB3SF
		RS485 communication type *2	MFDLNB3SG
		Basic type *2	MFDLNB3SE
	Frame symbol		F-frame
Power supply capacity (kVA)			7.0
Rated output (W)			4400
Rated torque (N·m)			28.0
Continuous stall torque (N·m)			28.0
Momentary Max. peak torque (N·m)			70.0
Rated current (A(rms))			27.2
Max. current (A(o-p))			96
Regenerative brake frequency (times/min) Note)1		Without option	No limit Note)2
		DV0P4285×2	No limit Note)2
Rated rotational speed (r/min)			1500
Max. rotational speed (r/min)			3000
Moment of inertia of rotor ($\times 10^{-4}$ kg·m^2)		Without brake	58.2
		With brake	63.0
Recommended moment of inertia ratio of the load and the rotor Note)3			10 times or less
Rotary encoder specifications *3			23-bit Absolute
	Resolution per single turn		8388608

• Brake specifications (For details, refer to P.305)

(This brake will be released when it is energized. Do not use this for braking the motor in motion.)

Static friction torque (N·m)	44.1 or more
Engaging time (ms)	150 or less
Releasing time (ms) Note)4	30 or less
Exciting current (DC) (A)	1.29
Releasing voltage (DC) (V)	2 or more
Exciting voltage (DC) (V)	24±2.4

• Permissible load (For details, refer to P.304)

During assembly	Radial load P-direction (N)	1666
	Thrust load A-direction (N)	784
	Thrust load B-direction (N)	980
During operation	Radial load P-direction (N)	1470
	Thrust load A, B-direction (N)	490

• For details of Note)1 to Note)4, refer to P.303.
• Dimensions of Driver, refer to P.59.
*1 □□ in the motor part number represents the motor specifications.
*2 Basic type and RS485 communication type are "Position control type".
Detail of model designation, refer to P.204.
*3 When using a rotary encoder as an incremental system (not using multi-turn data), do not connect a battery for absolute encoder.

Torque characteristics (at AC200 V of power voltage <Dotted line represents the torque at 10 % less supply voltage.>)

With oil seal

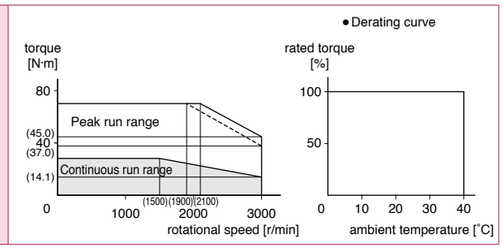

Dimensions

Motor specifications	Key way shaft/ Round shaft					
	without brake			with brake		
	without oil seal	with oil seal	with protective lip/ with oil seal	without oil seal	with oil seal	with protective lip/ with oil seal
Encoder connector Large size (JL10) type	—	P.291		—	P.292	

<Cautions> Reduce the moment of inertia ratio if high speed response operation is required.
Dimensions are subject to change without notice. Contact us or a dealer for the latest information.
Read the Instruction Manual carefully and understand all precautions and remarks before using the products.
Please avoid the motor, or equipment containing the motor to be distributed to Japan, or other regions through Japan.

• Please contact us for more information.

Specifications

			AC200 V
Motor model *1			MGMF552L1□□M
Applicable driver	Model No.	Multifunction type	MGDLTC3SF
		RS485 communication type *2	—
		Basic type *2	—
	Frame symbol		G-frame
Power supply capacity (kVA)			8.5
Rated output (W)			5500
Rated torque (N·m)			35.0
Continuous stall torque (N·m)			35.0
Momentary Max. peak torque (N·m)			102
Rated current (A(rms))			39.8
Max. current (A(o-p))			164
Regenerative brake frequency (times/min) Note)1		Without option	No limit Note)2
		DV0P4285×3	No limit Note)2
Rated rotational speed (r/min)			1500
Max. rotational speed (r/min)			3000
Moment of inertia of rotor ($\times 10^{-4}$ kg·m^2)		Without brake	83.0
		With brake	88.0
Recommended moment of inertia ratio of the load and the rotor Note)3			10 times or less
Rotary encoder specifications *3			23-bit Absolute
	Resolution per single turn		8388608

• Brake specifications (For details, refer to P.305)

(This brake will be released when it is energized. Do not use this for braking the motor in motion.)

Static friction torque (N·m)	63.0 or more
Engaging time (ms)	200 or less
Releasing time (ms) Note)4	80 or less
Exciting current (DC) (A)	1.29
Releasing voltage (DC) (V)	2 or more
Exciting voltage (DC) (V)	24±2.4

• Permissible load (For details, refer to P.304)

During assembly	Radial load P-direction (N)	2058
	Thrust load A-direction (N)	980
	Thrust load B-direction (N)	1176
During operation	Radial load P-direction (N)	1176
	Thrust load A, B-direction (N)	490

• For details of Note)1 to Note)4, refer to P.303.
• Dimensions of Driver, refer to P.60.
*1 □□ in the motor part number represents the motor specifications.
*2 Basic type and RS485 communication type are "Position control type".
Detail of model designation, refer to P.204.
*3 When using a rotary encoder as an incremental system (not using multi-turn data), do not connect a battery for absolute encoder.

Torque characteristics (at AC200 V of power voltage <Dotted line represents the torque at 10 % less supply voltage.>)

With oil seal

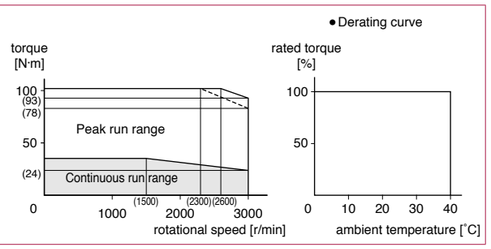

Dimensions

Motor specifications	Key way shaft/ Round shaft					
	without brake			with brake		
	without oil seal	with oil seal	with protective lip/ with oil seal	without oil seal	with oil seal	with protective lip/ with oil seal
Encoder connector Large size (JL10) type	—	P.292	—	—	P.292	—

<Cautions> Reduce the moment of inertia ratio if high speed response operation is required.
Dimensions are subject to change without notice. Contact us or a dealer for the latest information.
Read the Instruction Manual carefully and understand all precautions and remarks before using the products.
Please avoid the motor, or equipment containing the motor to be distributed to Japan, or other regions through Japan.

Special Order Product

MSMF 50 W to 100 W

MSMF 50 W

Leadwire type (IP65) · without brake · without/with oil seal · Round shaft/ Key way, center tap shaft

Mass: 0.32 kg

① Encoder connector
② Motor connector

● Motor model

Power supply	Shaft	without oil seal	with oil seal
200 V	Round	MSMF5AZL1A2M	MSMF5AZL1C2M
	Key-way, center tap	MSMF5AZL1S2M	MSMF5AZL1U2M

● Dimensions are subject to change without notice. Contact us or a dealer for the latest information.

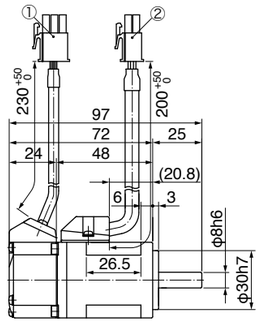

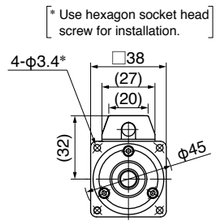

Key way dimensions
<Key way, center tap shaft>

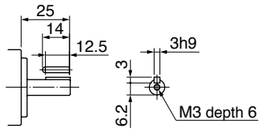

[Unit: mm]

Leadwire type (IP65) · with brake · without/with oil seal · Round shaft/ Key way, center tap shaft

Mass: 0.53 kg

① Encoder connector
② Brake connector
③ Motor connector

● Motor model

Power supply	Shaft	without oil seal	with oil seal
200 V	Round	MSMF5AZL1B2M	MSMF5AZL1D2M
	Key-way, center tap	MSMF5AZL1T2M	MSMF5AZL1V2M

● Dimensions are subject to change without notice. Contact us or a dealer for the latest information.

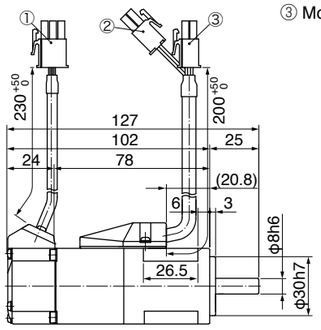

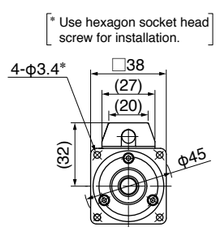

Key way dimensions
<Key way, center tap shaft>

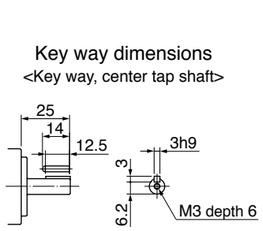

[Unit: mm]

MSMF 100 W

Leadwire type (IP65) · without brake · without/with oil seal · Round shaft/ Key way, center tap shaft

Mass: 0.47 kg

① Encoder connector
② Motor connector

● Motor model

Power supply	Shaft	without oil seal	with oil seal
200 V	Round	MSMF012L1A2M	MSMF012L1C2M
	Key-way, center tap	MSMF012L1S2M	MSMF012L1U2M

● Dimensions are subject to change without notice. Contact us or a dealer for the latest information.

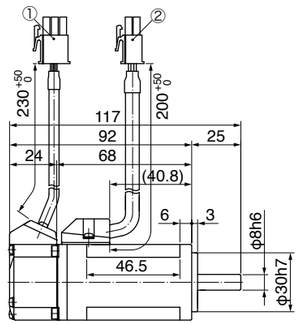

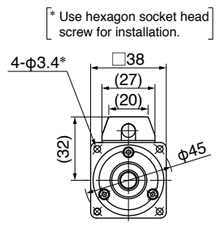

Key way dimensions
<Key way, center tap shaft>

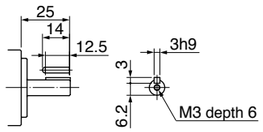

[Unit: mm]

* For motors specifications, refer to P.211, P.212.

Special Order Product

MSMF 100 W to 200 W

MSMF 100 W

Leadwire type (IP65) · with brake · without/with oil seal · Round shaft/ Key way, center tap shaft

Mass: 0.68 kg

① Encoder connector
② Brake connector
③ Motor connector

● Motor model

Power supply	Shaft	without oil seal	with oil seal
200 V	Round	MSMF012L1B2M	MSMF012L1D2M
	Key-way, center tap	MSMF012L1T2M	MSMF012L1V2M

● Dimensions are subject to change without notice. Contact us or a dealer for the latest information.

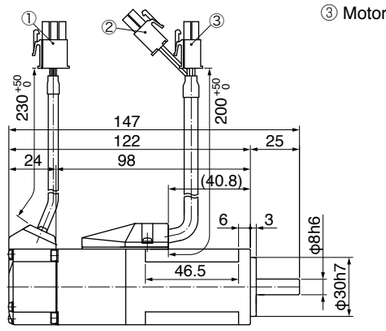

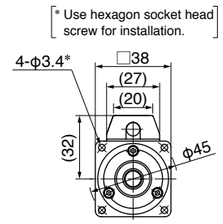

Key way dimensions
<Key way, center tap shaft>

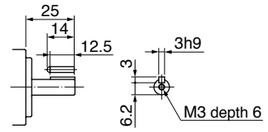

[Unit: mm]

MSMF 200 W

Leadwire type (IP65) · without brake · without/with oil seal · Round shaft/ Key way, center tap shaft

Mass: 0.82 kg

① Encoder connector
② Motor connector

● Motor model

Power supply	Shaft	without oil seal	with oil seal
200 V	Round	MSMF022L1A2M	MSMF022L1C2M
	Key-way, center tap	MSMF022L1S2M	MSMF022L1U2M

● Dimensions are subject to change without notice. Contact us or a dealer for the latest information.

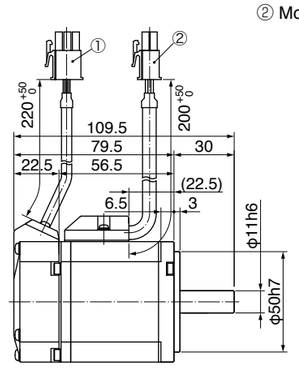

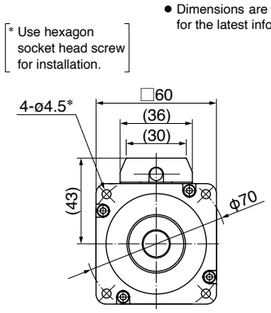

Key way dimensions
<Key way, center tap shaft>

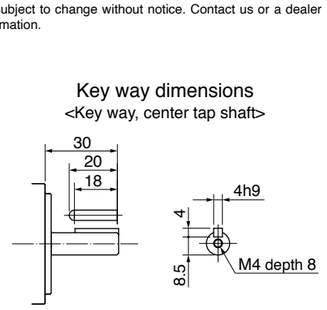

[Unit: mm]

Leadwire type (IP65) · with brake · without/with oil seal · Round shaft/ Key way, center tap shaft

Mass: 1.3 kg

① Encoder connector
② Brake connector
③ Motor connector

● Motor model

Power supply	Shaft	without oil seal	with oil seal
200 V	Round	MSMF022L1B2M	MSMF022L1D2M
	Key-way, center tap	MSMF022L1T2M	MSMF022L1V2M

● Dimensions are subject to change without notice. Contact us or a dealer for the latest information.

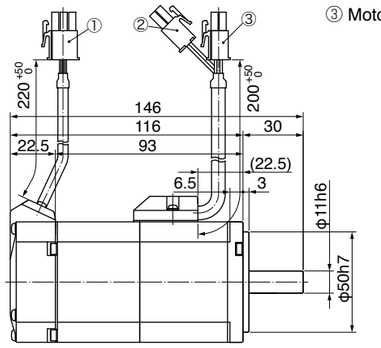

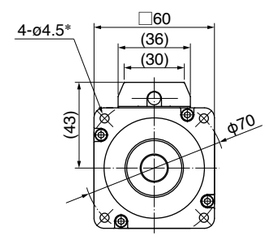

Key way dimensions
<Key way, center tap shaft>

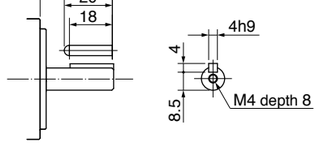

[Unit: mm]

* For motors specifications, refer to P.212, P.213.

Special Order Product

MSMF 400 W to 750 W

MSMF 400 W

Leadwire type (IP65) · without brake · without/with oil seal · Round shaft/ Key way, center tap shaft

Mass: 1.2 kg

① Encoder connector
② Motor connector

● Motor model

Power supply	Shaft	without oil seal	with oil seal
200 V	Round	MSMF042L1A2M	MSMF042L1C2M
	Key-way, center tap	MSMF042L1S2M	MSMF042L1U2M

● Dimensions are subject to change without notice. Contact us or a dealer for the latest information.

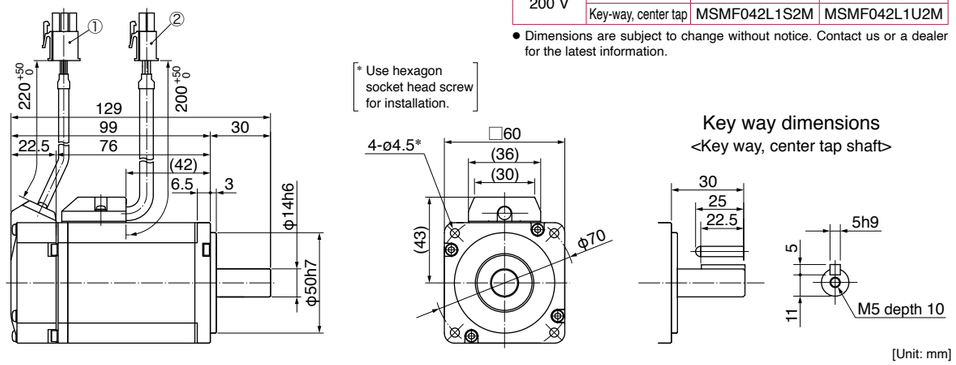

* Use hexagon socket head screw for installation.

Key way dimensions
<Key way, center tap shaft>

[Unit: mm]

Leadwire type (IP65) · with brake · without/with oil seal · Round shaft/ Key way, center tap shaft

Mass: 1.7 kg

① Encoder connector
② Brake connector
③ Motor connector

● Motor model

Power supply	Shaft	without oil seal	with oil seal
200 V	Round	MSMF042L1B2M	MSMF042L1D2M
	Key-way, center tap	MSMF042L1T2M	MSMF042L1V2M

● Dimensions are subject to change without notice. Contact us or a dealer for the latest information.

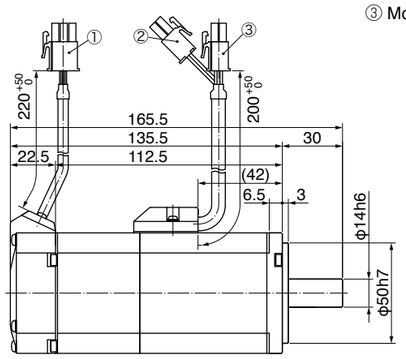

* Use hexagon socket head screw for installation.

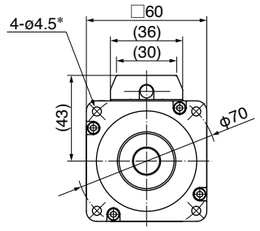

Key way dimensions
<Key way, center tap shaft>

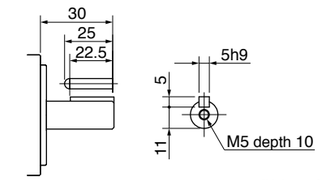

[Unit: mm]

MSMF 750 W

Leadwire type (IP65) · without brake · without/with oil seal · Round shaft/ Key way, center tap shaft

Mass: 2.3 kg

① Encoder connector
② Motor connector

● Motor model

Power supply	Shaft	without oil seal	with oil seal
200 V	Round	MSMF082L1A2M	MSMF082L1C2M
	Key-way, center tap	MSMF082L1S2M	MSMF082L1U2M

● Dimensions are subject to change without notice. Contact us or a dealer for the latest information.

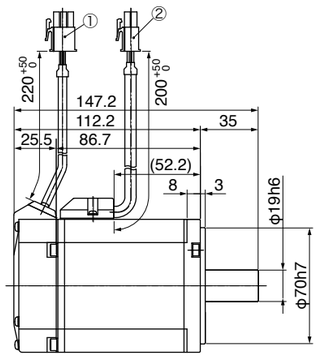

* Use hexagon socket head screw for installation.

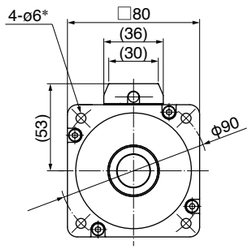

Key way dimensions
<Key way, center tap shaft>

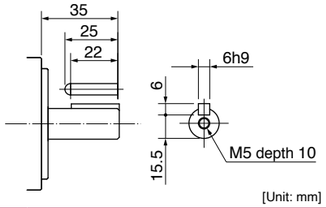

[Unit: mm]

* For motors specifications, refer to P.214, P.215.

Special Order Product

MSMF 750 W to 1000 W

MSMF 750 W

Leadwire type (IP65) · with brake · without/with oil seal · Round shaft/ Key way, center tap shaft

Mass: 3.1 kg

① Encoder connector
② Brake connector
③ Motor connector

● Motor model

Power supply	Shaft	without oil seal	with oil seal
200 V	Round	MSMF082L1B2M	MSMF082L1D2M
	Key-way, center tap	MSMF082L1T2M	MSMF082L1V2M

● Dimensions are subject to change without notice. Contact us or a dealer for the latest information.

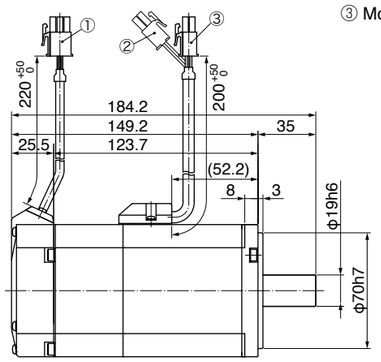

* Use hexagon socket head screw for installation.

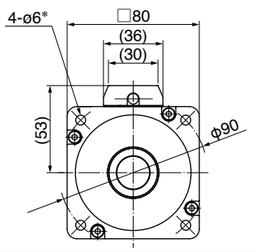

Key way dimensions
<Key way, center tap shaft>

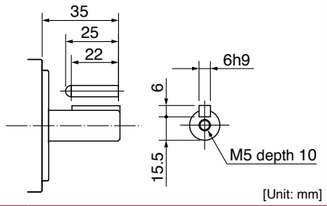

[Unit: mm]

MSMF 1000 W

Leadwire type (IP65) · without brake · without/with oil seal · Round shaft/ Key way, center tap shaft

Mass: 2.8 kg

① Encoder connector
② Motor connector

● Motor model

Power supply	Shaft	without oil seal	with oil seal
200 V	Round	MSMF092L1A2M	MSMF092L1C2M
	Key-way, center tap	MSMF092L1S2M	MSMF092L1U2M

● Dimensions are subject to change without notice. Contact us or a dealer for the latest information.

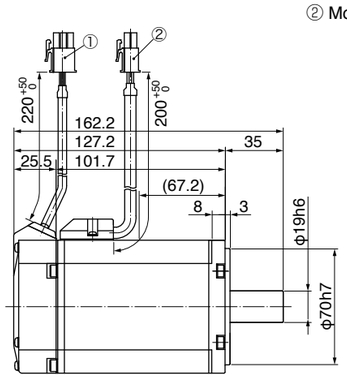

* Use hexagon socket head screw for installation.

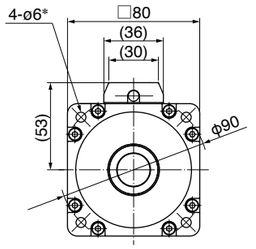

Key way dimensions
<Key way, center tap shaft>

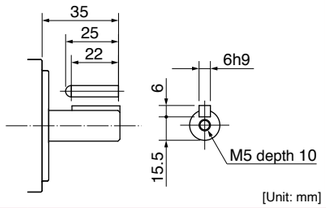

[Unit: mm]

Leadwire type (IP65) · with brake · without/with oil seal · Round shaft/ Key way, center tap shaft

Mass: 3.6 kg

① Encoder connector
② Brake connector
③ Motor connector

● Motor model

Power supply	Shaft	without oil seal	with oil seal
200 V	Round	MSMF092L1B2M	MSMF092L1D2M
	Key-way, center tap	MSMF092L1T2M	MSMF092L1V2M

● Dimensions are subject to change without notice. Contact us or a dealer for the latest information.

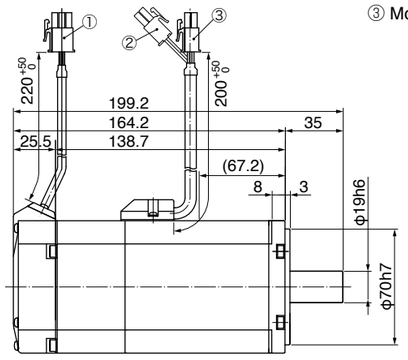

* Use hexagon socket head screw for installation.

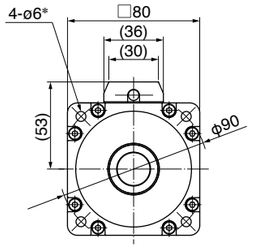

Key way dimensions
<Key way, center tap shaft>

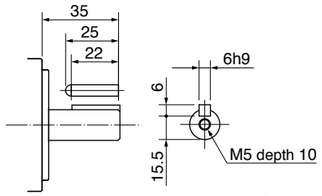

[Unit: mm]

* For motors specifications, refer to P.215, P.216.

Special Order Product

MSMF 1.0 kW to 1.5 kW

MSMF 1.0 kW

Large size connector (JL10) type ・ without brake ・ with oil seal/ with protective lip ・ Key way shaft/ Round shaft

① Encoder connector (Large size JL10)
② Motor connector

Mass: 3.6 kg

● Motor model

Power supply	Shaft	with oil seal	with protective lip
200 V	Round	MSMF102L1C6M	MSMF102L1C8M
	Key-way	MSMF102L1G6M	MSMF102L1G8M

● Dimensions are subject to change without notice. Contact us or a dealer for the latest information.

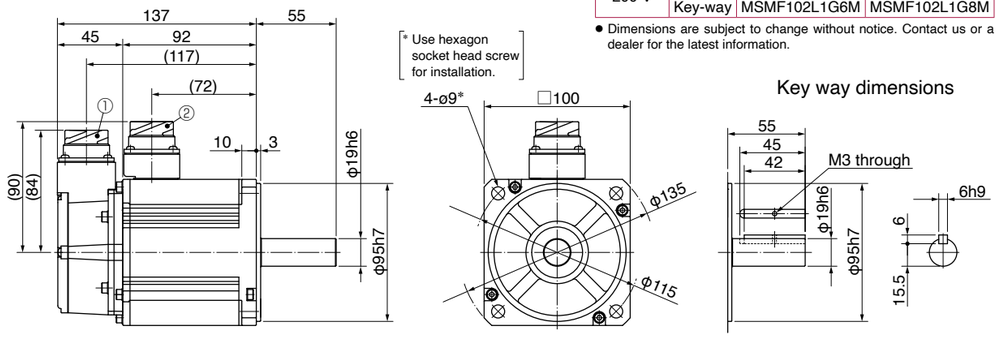

[Unit: mm]

Large size connector (JL10) type ・ with brake ・ with oil seal/ with protective lip ・ Key way shaft/ Round shaft

① Encoder connector (Large size JL10)
② Motor/Brake connector

Mass: 4.7 kg

● Motor model

Power supply	Shaft	with oil seal	with protective lip
200 V	Round	MSMF102L1D6M	MSMF102L1D8M
	Key-way	MSMF102L1H6M	MSMF102L1H8M

● Dimensions are subject to change without notice. Contact us or a dealer for the latest information.

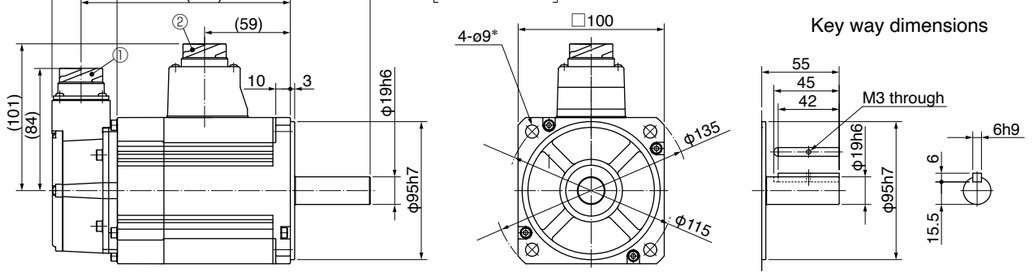

[Unit: mm]

MSMF 1.5 kW

Large size connector (JL10) type ・ without brake ・ with oil seal/ with protective lip ・ Key way shaft/ Round shaft

① Encoder connector (Large size JL10)
② Motor connector

Mass: 4.6 kg

● Motor model

Power supply	Shaft	with oil seal	with protective lip
200 V	Round	MSMF152L1C6M	MSMF152L1C8M
	Key-way	MSMF152L1G6M	MSMF152L1G8M

● Dimensions are subject to change without notice. Contact us or a dealer for the latest information.

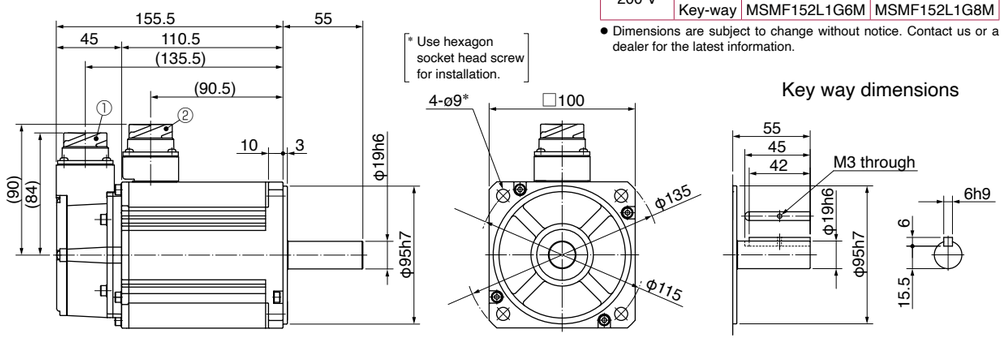

[Unit: mm]

* For motors specifications, refer to P.217, P.218.

Special Order Product

MSMF 1.5 kW to 2.0 kW

MSMF 1.5 kW

Large size connector (JL10) type ・ with brake ・ with oil seal/ with protective lip ・ Key way shaft/ Round shaft

① Encoder connector (Large size JL10)
② Motor/Brake connector

Mass: 5.6 kg

● Motor model

Power supply	Shaft	with oil seal	with protective lip
200 V	Round	MSMF152L1D6M	MSMF152L1D8M
	Key-way	MSMF152L1H6M	MSMF152L1H8M

● Dimensions are subject to change without notice. Contact us or a dealer for the latest information.

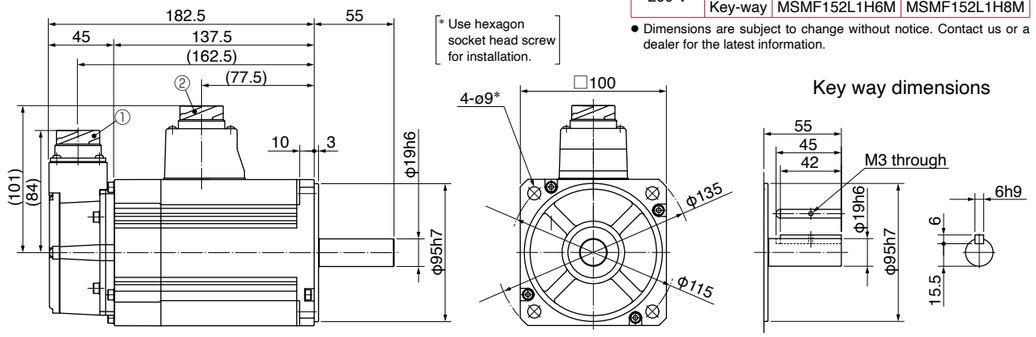

[Unit: mm]

MSMF 2.0 kW

Large size connector (JL10) type ・ without brake ・ with oil seal/ with protective lip ・ Key way shaft/ Round shaft

① Encoder connector (Large size JL10)
② Motor connector

Mass: 5.6 kg

● Motor model

Power supply	Shaft	with oil seal	with protective lip
200 V	Round	MSMF202L1C6M	MSMF202L1C8M
	Key-way	MSMF202L1G6M	MSMF202L1G8M

● Dimensions are subject to change without notice. Contact us or a dealer for the latest information.

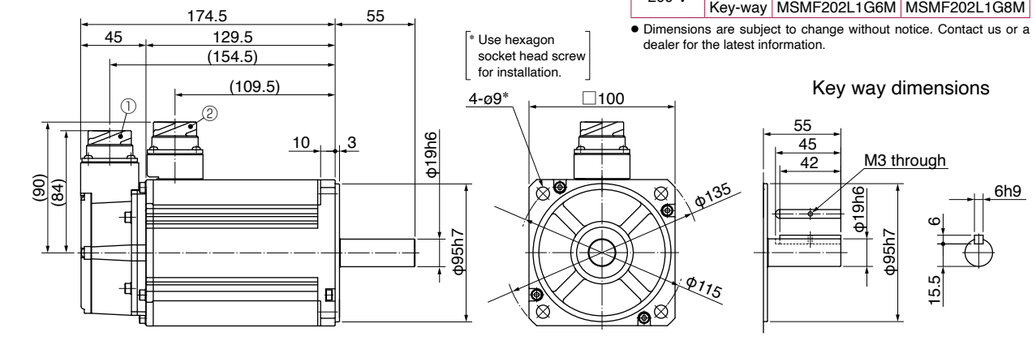

[Unit: mm]

Large size connector (JL10) type ・ with brake ・ with oil seal/ with protective lip ・ Key way shaft/ Round shaft

① Encoder connector (Large size JL10)
② Motor/Brake connector

Mass: 6.6 kg

● Motor model

Power supply	Shaft	with oil seal	with protective lip
200 V	Round	MSMF202L1D6M	MSMF202L1D8M
	Key-way	MSMF202L1H6M	MSMF202L1H8M

● Dimensions are subject to change without notice. Contact us or a dealer for the latest information.

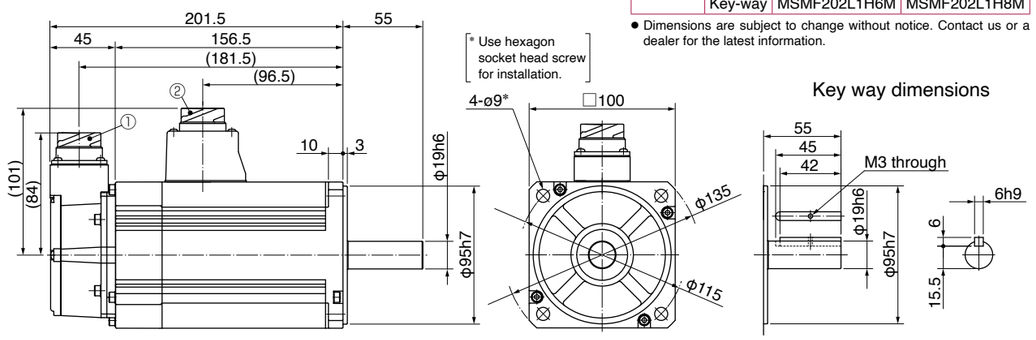

[Unit: mm]

* For motors specifications, refer to P.218, P.219.

MSMF 3.0 kW

Large size connector (JL10) type · without brake · with oil seal/ with protective lip · Key way shaft/ Round shaft

① Encoder connector (Large size JL10)
② Motor connector

Mass: 8.7 kg

● Motor model

Power supply	Shaft	with oil seal	with protective lip
200 V	Round	MSMF302L1C6M	MSMF302L1C8M
	Key-way	MSMF302L1G6M	MSMF302L1G8M

● Dimensions are subject to change without notice. Contact us or a dealer for the latest information.

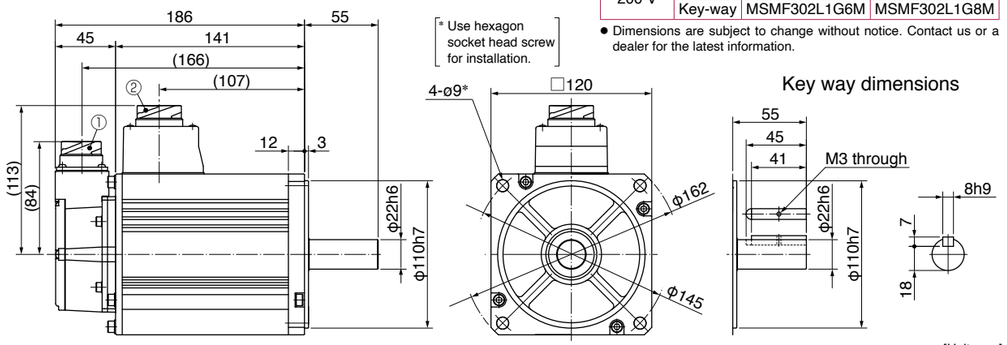

[Unit: mm]

Large size connector (JL10) type · with brake · with oil seal/ with protective lip · Key way shaft/ Round shaft

① Encoder connector (Large size JL10)
② Motor/Brake connector

Mass: 9.9 kg

● Motor model

Power supply	Shaft	with oil seal	with protective lip
200 V	Round	MSMF302L1D6M	MSMF302L1D8M
	Key-way	MSMF302L1H6M	MSMF302L1H8M

● Dimensions are subject to change without notice. Contact us or a dealer for the latest information.

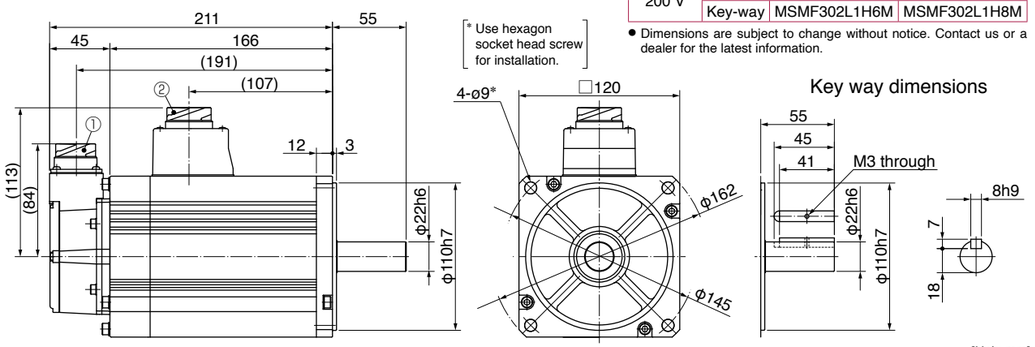

[Unit: mm]

MSMF 4.0 kW

Large size connector (JL10) type · without brake · with oil seal/ with protective lip · Key way shaft/ Round shaft

① Encoder connector (Large size JL10)
② Motor connector

Mass: 11.5 kg

● Motor model

Power supply	Shaft	with oil seal	with protective lip
200 V	Round	MSMF402L1C6M	MSMF402L1C8M
	Key-way	MSMF402L1G6M	MSMF402L1G8M

● Dimensions are subject to change without notice. Contact us or a dealer for the latest information.

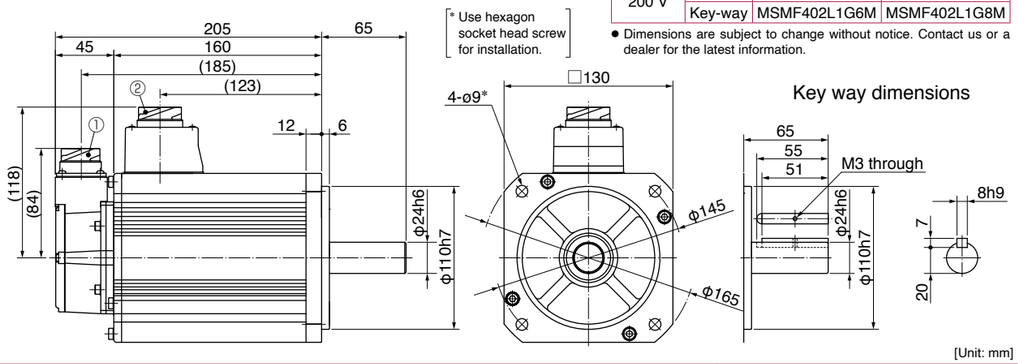

[Unit: mm]

* For motors specifications, refer to P.220, P.221.

MSMF 4.0 kW

Large size connector (JL10) type · with brake · with oil seal/ with protective lip · Key way shaft/ Round shaft

① Encoder connector (Large size JL10)
② Motor/Brake connector

Mass: 13.2 kg

● Motor model

Power supply	Shaft	with oil seal	with protective lip
200 V	Round	MSMF402L1D6M	MSMF402L1D8M
	Key-way	MSMF402L1H6M	MSMF402L1H8M

● Dimensions are subject to change without notice. Contact us or a dealer for the latest information.

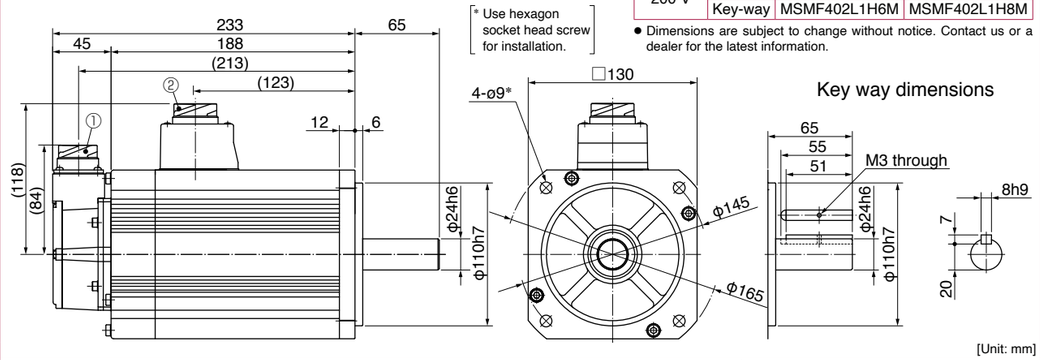

[Unit: mm]

MSMF 5.0 kW

Large size connector (JL10) type · without brake · with oil seal/ with protective lip · Key way shaft/ Round shaft

① Encoder connector (Large size JL10)
② Motor connector

Mass: 14.5 kg

● Motor model

Power supply	Shaft	with oil seal	with protective lip
200 V	Round	MSMF502L1C6M	MSMF502L1C8M
	Key-way	MSMF502L1G6M	MSMF502L1G8M

● Dimensions are subject to change without notice. Contact us or a dealer for the latest information.

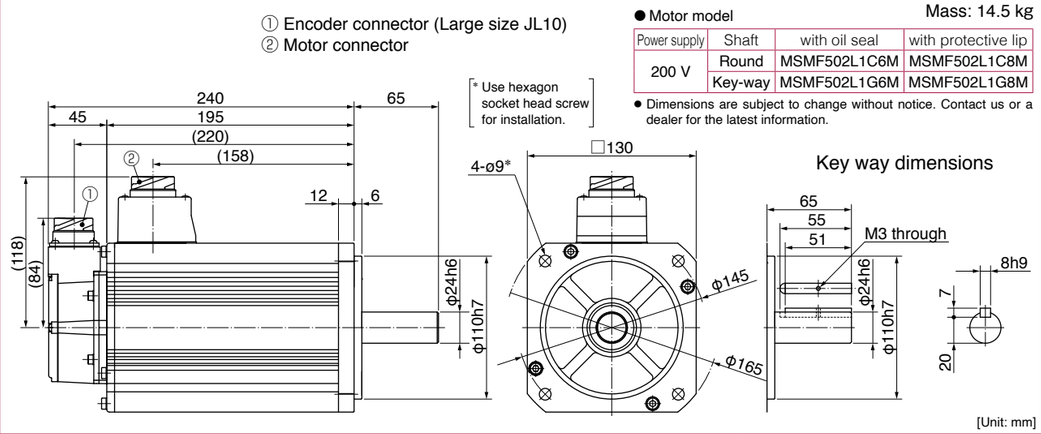

[Unit: mm]

Large size connector (JL10) type · with brake · with oil seal/ with protective lip · Key way shaft/ Round shaft

① Encoder connector (Large size JL10)
② Motor/Brake connector

Mass: 16.1 kg

● Motor model

Power supply	Shaft	with oil seal	with protective lip
200 V	Round	MSMF502L1D6M	MSMF502L1D8M
	Key-way	MSMF502L1H6M	MSMF502L1H8M

● Dimensions are subject to change without notice. Contact us or a dealer for the latest information.

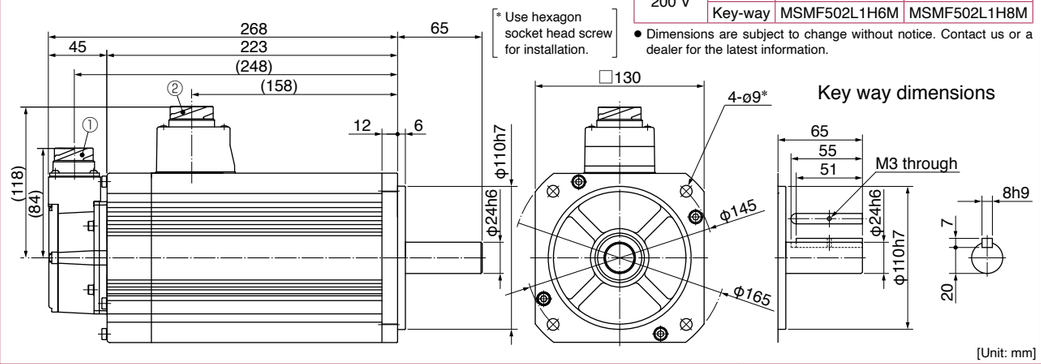

[Unit: mm]

* For motors specifications, refer to P.221, P.222.

MQMF 100 W

Leadwire type (IP65) · without brake · without oil seal · Round shaft/ Key way, center tap shaft

Mass: 0.54 kg

① Encoder connector
② Motor connector

● Motor model

Power supply	Shaft	Motor model No.
200 V	Round	MQMF012L1A2M
	Key-way, center tap	MQMF012L1S2M

● Dimensions are subject to change without notice. Contact us or a dealer for the latest information.

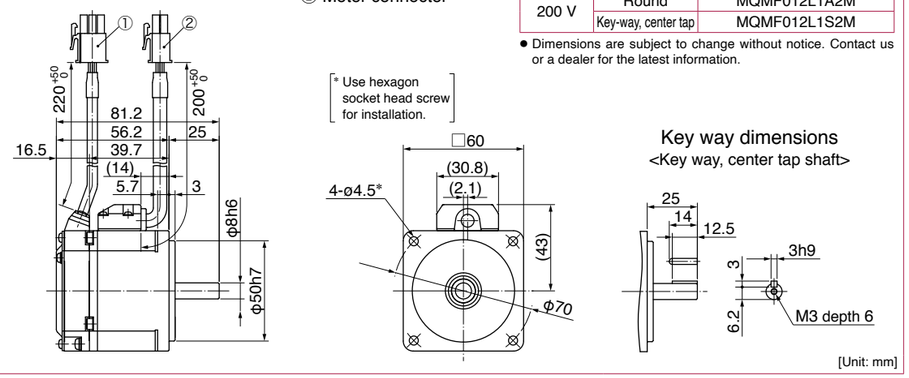

[Use hexagon socket head screw for installation.

Key way dimensions
<Key way, center tap shaft>

[Unit: mm]

Leadwire type (IP65) · without brake · with oil seal · Round shaft/ Key way, center tap shaft

Mass: 0.57 kg

① Encoder connector
② Motor connector

● Motor model

Power supply	Shaft	Motor model No.
200 V	Round	MQMF012L1C2M
	Key-way, center tap	MQMF012L1U2M

● Dimensions are subject to change without notice. Contact us or a dealer for the latest information.

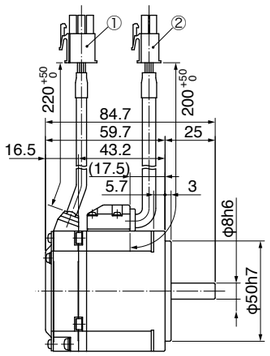

[Use hexagon socket head screw for installation.

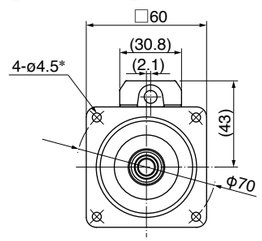

Key way dimensions
<Key way, center tap shaft>

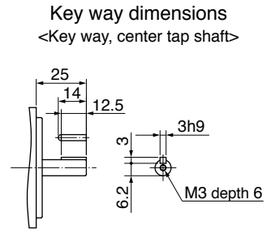

[Unit: mm]

Leadwire type (IP65) · without brake · with protective lip/ with oil seal · Round shaft/ Key way, center tap shaft

Mass: 0.61 kg

① Encoder connector
② Motor connector

● Motor model

Power supply	Shaft	Motor model No.
200 V	Round	MQMF012L1C4M
	Key-way, center tap	MQMF012L1U4M

● Dimensions are subject to change without notice. Contact us or a dealer for the latest information.

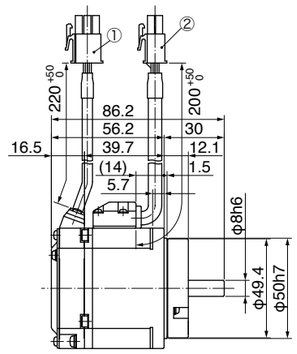

[Use hexagon socket head screw for installation.

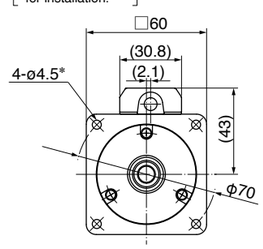

Key way dimensions
<Key way, center tap shaft>

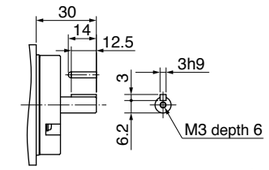

[Unit: mm]

* For motors specifications, refer to P.223.

MQMF 100 W

Leadwire type (IP65) · with brake · without oil seal · Round shaft/ Key way, center tap shaft

Mass: 0.79 kg

① Encoder connector
② Brake connector
③ Motor connector

● Motor model

Power supply	Shaft	Motor model No.
200 V	Round	MQMF012L1B2M
	Key-way, center tap	MQMF012L1T2M

● Dimensions are subject to change without notice. Contact us or a dealer for the latest information.

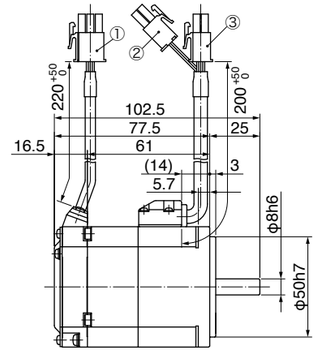

[Use hexagon socket head screw for installation.

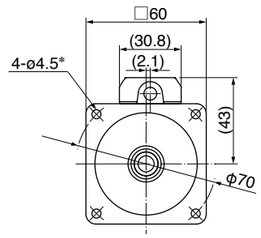

Key way dimensions
<Key way, center tap shaft>

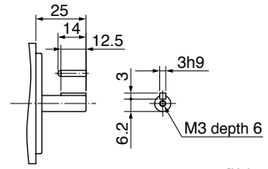

[Unit: mm]

Leadwire type (IP65) · with brake · with oil seal · Round shaft/ Key way, center tap shaft

Mass: 0.82 kg

① Encoder connector
② Brake connector
③ Motor connector

● Motor model

Power supply	Shaft	Motor model No.
200 V	Round	MQMF012L1D2M
	Key-way, center tap	MQMF012L1V2M

● Dimensions are subject to change without notice. Contact us or a dealer for the latest information.

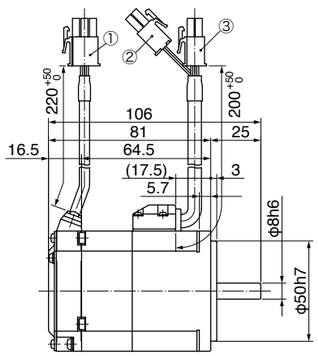

[Use hexagon socket head screw for installation.

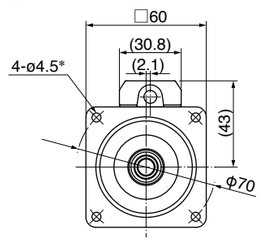

Key way dimensions
<Key way, center tap shaft>

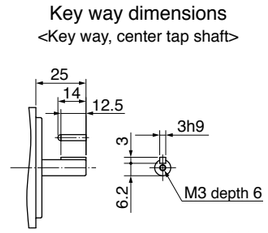

[Unit: mm]

Leadwire type (IP65) · with brake · with protective lip/ with oil seal · Round shaft/ Key way, center tap shaft

Mass: 0.86 kg

① Encoder connector
② Brake connector
③ Motor connector

● Motor model

Power supply	Shaft	Motor model No.
200 V	Round	MQMF012L1D4M
	Key-way, center tap	MQMF012L1V4M

● Dimensions are subject to change without notice. Contact us or a dealer for the latest information.

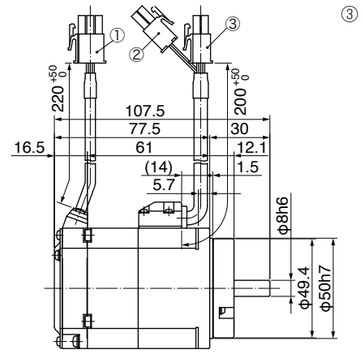

[Use hexagon socket head screw for installation.

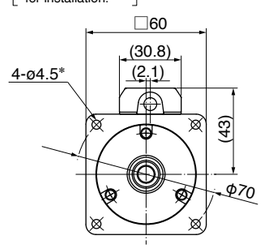

Key way dimensions
<Key way, center tap shaft>

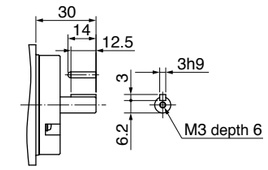

[Unit: mm]

* For motors specifications, refer to P.223.

MQMF 200 W

Leadwire type (IP65) · without brake · without oil seal · Round shaft/ Key way, center tap shaft

Mass: 1.1 kg

① Encoder connector
② Motor connector

● Motor model

Power supply	Shaft	Motor model No.
200 V	Round	MQMF022L1A2M
	Key-way, center tap	MQMF022L1S2M

● Dimensions are subject to change without notice. Contact us or a dealer for the latest information.

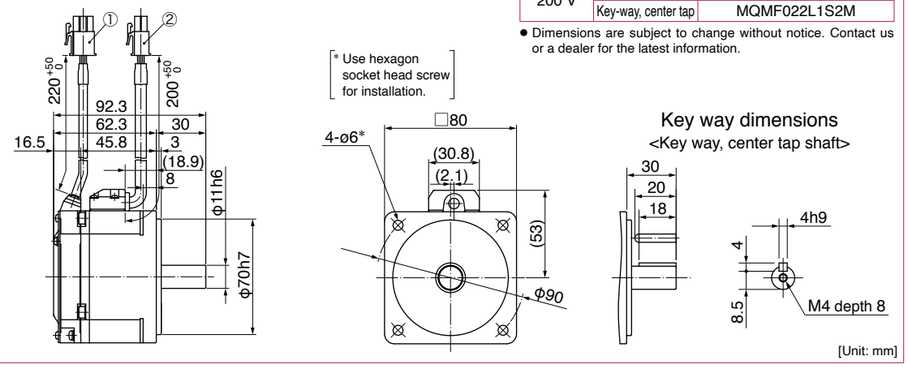

[Unit: mm]

Leadwire type (IP65) · without brake · with oil seal · Round shaft/ Key way, center tap shaft

Mass: 1.2 kg

① Encoder connector
② Motor connector

● Motor model

Power supply	Shaft	Motor model No.
200 V	Round	MQMF022L1C2M
	Key-way, center tap	MQMF022L1U2M

● Dimensions are subject to change without notice. Contact us or a dealer for the latest information.

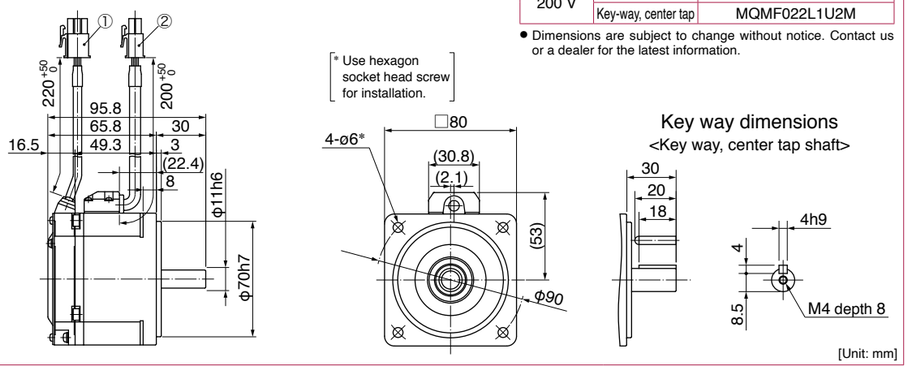

[Unit: mm]

Leadwire type (IP65) · without brake · with protective lip/ with oil seal · Round shaft/ Key way, center tap shaft

Mass: 1.3 kg

① Encoder connector
② Motor connector

● Motor model

Power supply	Shaft	Motor model No.
200 V	Round	MQMF022L1C4M
	Key-way, center tap	MQMF022L1U4M

● Dimensions are subject to change without notice. Contact us or a dealer for the latest information.

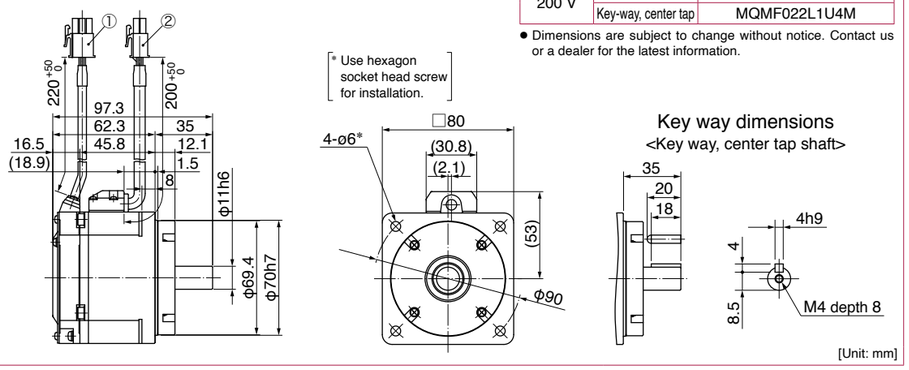

[Unit: mm]

* For motors specifications, refer to P.224.

MQMF 200 W

Leadwire type (IP65) · with brake · without oil seal · Round shaft/ Key way, center tap shaft

Mass: 1.5 kg

① Encoder connector
② Brake connector
③ Motor connector

● Motor model

Power supply	Shaft	Motor model No.
200 V	Round	MQMF022L1B2M
	Key-way, center tap	MQMF022L1T2M

● Dimensions are subject to change without notice. Contact us or a dealer for the latest information.

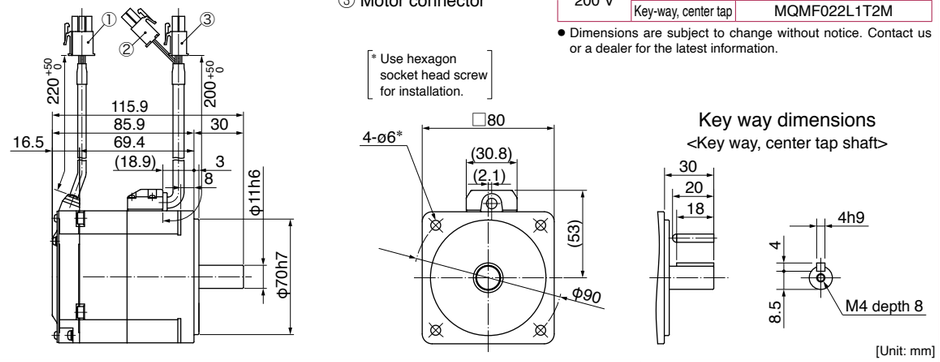

[Unit: mm]

Leadwire type (IP65) · with brake · with oil seal · Round shaft/ Key way, center tap shaft

Mass: 1.6 kg

① Encoder connector
② Brake connector
③ Motor connector

● Motor model

Power supply	Shaft	Motor model No.
200 V	Round	MQMF022L1D2M
	Key-way, center tap	MQMF022L1V2M

● Dimensions are subject to change without notice. Contact us or a dealer for the latest information.

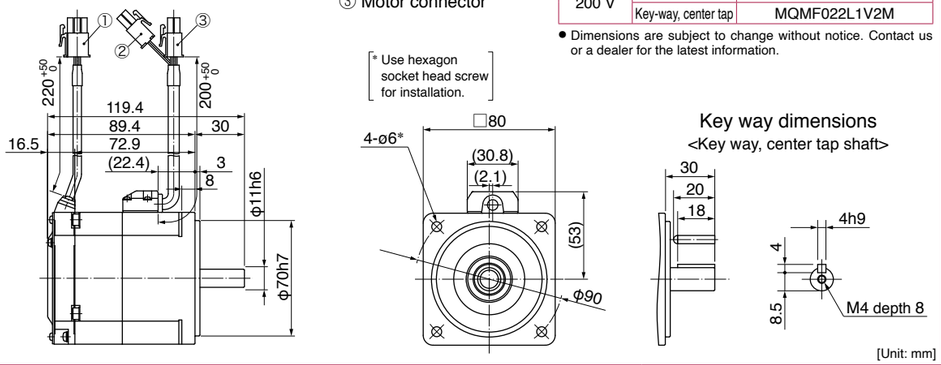

[Unit: mm]

Leadwire type (IP65) · with brake · with protective lip/ with oil seal · Round shaft/ Key way, center tap shaft

Mass: 1.7 kg

① Encoder connector
② Brake connector
③ Motor connector

● Motor model

Power supply	Shaft	Motor model No.
200 V	Round	MQMF022L1D4M
	Key-way, center tap	MQMF022L1V4M

● Dimensions are subject to change without notice. Contact us or a dealer for the latest information.

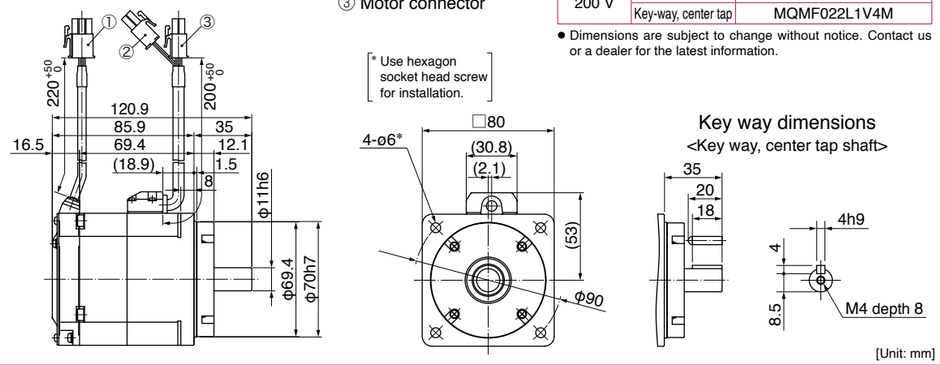

[Unit: mm]

* For motors specifications, refer to P.224.

MQMF 400 W

Leadwire type (IP65) · without brake · without oil seal · Round shaft/ Key way, center tap shaft

Mass: 1.5 kg

① Encoder connector
② Motor connector

● Motor model

Power supply	Shaft	Motor model No.
200 V	Round	MQMF042L1A2M
	Key-way, center tap	MQMF042L1S2M

● Dimensions are subject to change without notice. Contact us or a dealer for the latest information.

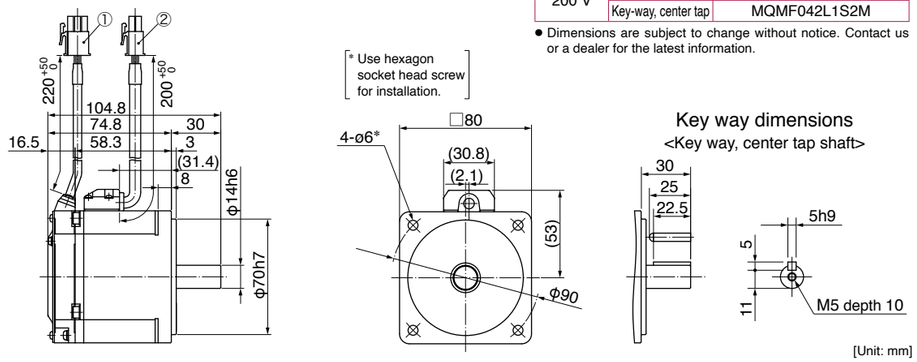

[* Use hexagon socket head screw for installation.]

Key way dimensions
<Key way, center tap shaft>

[Unit: mm]

Leadwire type (IP65) · without brake · with oil seal · Round shaft/ Key way, center tap shaft

Mass: 1.6 kg

① Encoder connector
② Motor connector

● Motor model

Power supply	Shaft	Motor model No.
200 V	Round	MQMF042L1C2M
	Key-way, center tap	MQMF042L1U2M

● Dimensions are subject to change without notice. Contact us or a dealer for the latest information.

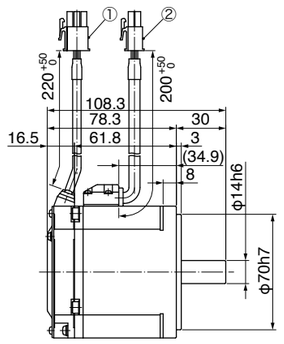

[* Use hexagon socket head screw for installation.]

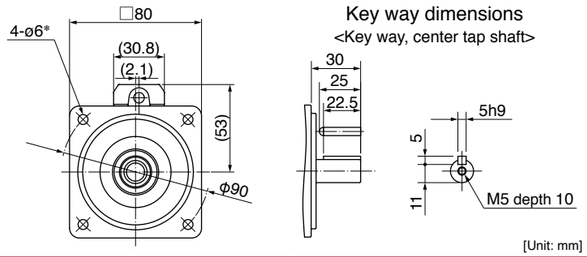

Key way dimensions
<Key way, center tap shaft>

[Unit: mm]

Leadwire type (IP65) · without brake · with protective lip/ with oil seal · Round shaft/ Key way, center tap shaft

Mass: 1.7 kg

① Encoder connector
② Motor connector

● Motor model

Power supply	Shaft	Motor model No.
200 V	Round	MQMF042L1C4M
	Key-way, center tap	MQMF042L1U4M

● Dimensions are subject to change without notice. Contact us or a dealer for the latest information.

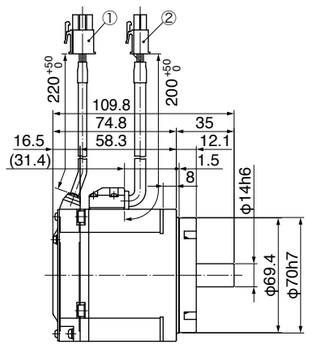

[* Use hexagon socket head screw for installation.]

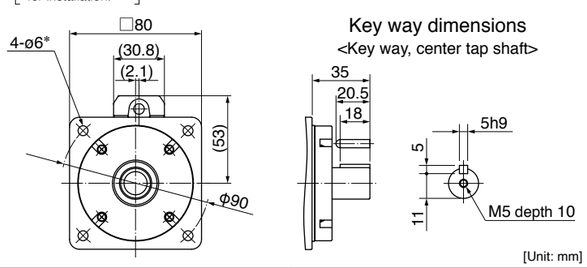

Key way dimensions
<Key way, center tap shaft>

[Unit: mm]

* For motors specifications, refer to P.225.

MQMF 400 W

Leadwire type (IP65) · with brake · without oil seal · Round shaft/ Key way, center tap shaft

Mass: 2.0 kg

① Encoder connector
② Brake connector
③ Motor connector

● Motor model

Power supply	Shaft	Motor model No.
200 V	Round	MQMF042L1B2M
	Key-way, center tap	MQMF042L1T2M

● Dimensions are subject to change without notice. Contact us or a dealer for the latest information.

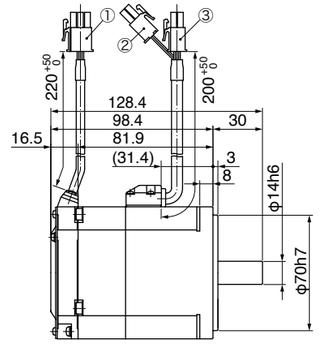

[* Use hexagon socket head screw for installation.]

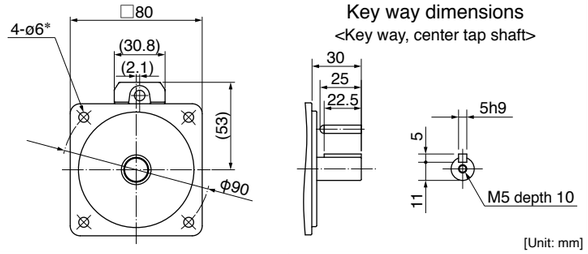

Key way dimensions
<Key way, center tap shaft>

[Unit: mm]

Leadwire type (IP65) · with brake · with oil seal · Round shaft/ Key way, center tap shaft

Mass: 2.1 kg

① Encoder connector
② Brake connector
③ Motor connector

● Motor model

Power supply	Shaft	Motor model No.
200 V	Round	MQMF042L1D2M
	Key-way, center tap	MQMF042L1V2M

● Dimensions are subject to change without notice. Contact us or a dealer for the latest information.

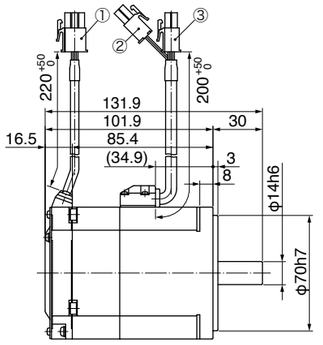

[* Use hexagon socket head screw for installation.]

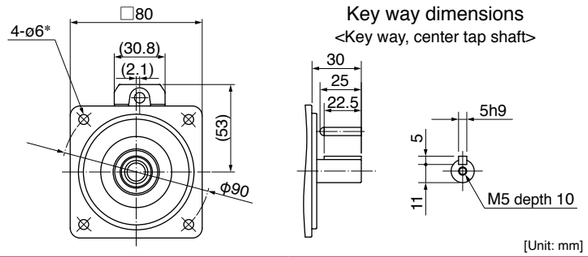

Key way dimensions
<Key way, center tap shaft>

[Unit: mm]

Leadwire type (IP65) · with brake · with protective lip/ with oil seal · Round shaft/ Key way, center tap shaft

Mass: 2.2 kg

① Encoder connector
② Brake connector
③ Motor connector

● Motor model

Power supply	Shaft	Motor model No.
200 V	Round	MQMF042L1D4M
	Key-way, center tap	MQMF042L1V4M

● Dimensions are subject to change without notice. Contact us or a dealer for the latest information.

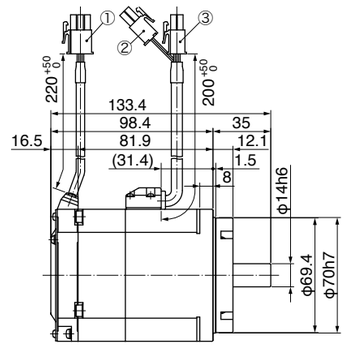

[* Use hexagon socket head screw for installation.]

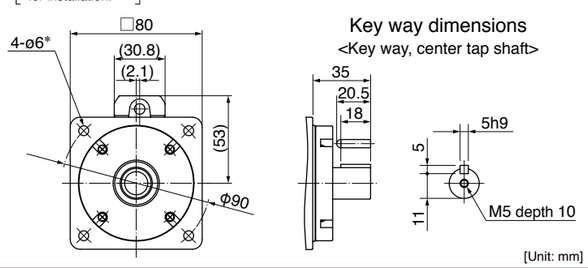

Key way dimensions
<Key way, center tap shaft>

[Unit: mm]

* For motors specifications, refer to P.225.

MHMF 50 W

Leadwire type (IP65) · without brake · without oil seal · Round shaft/ Key way, center tap shaft

① Encoder connector
② Motor connector

Mass: 0.29 kg

● Motor model

Power supply	Shaft	Motor model No.
200 V	Round	MHMF5AZL1A2M
	Key-way, center tap	MHMF5AZL1S2M

● Dimensions are subject to change without notice. Contact us or a dealer for the latest information.

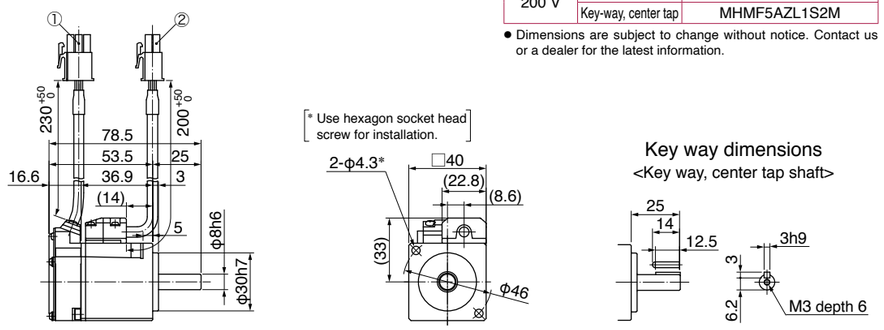

[* Use hexagon socket head screw for installation.]

Key way dimensions
<Key way, center tap shaft>

[Unit: mm]

Leadwire type (IP65) · without brake · with oil seal · Round shaft/ Key way, center tap shaft

① Encoder connector
② Motor connector

Mass: 0.31 kg

● Motor model

Power supply	Shaft	Motor model No.
200 V	Round	MHMF5AZL1C2M
	Key-way, center tap	MHMF5AZL1U2M

● Dimensions are subject to change without notice. Contact us or a dealer for the latest information.

[* Use hexagon socket head screw for installation.]

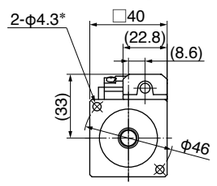

Key way dimensions
<Key way, center tap shaft>

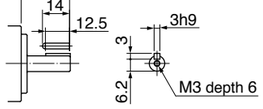

[Unit: mm]

Leadwire type (IP65) · without brake · with protective lip/ with oil seal · Round shaft/ Key way, center tap shaft

① Encoder connector
② Motor connector

Mass: 0.32 kg

● Motor model

Power supply	Shaft	Motor model No.
200 V	Round	MHMF5AZL1C4M
	Key-way, center tap	MHMF5AZL1U4M

● Dimensions are subject to change without notice. Contact us or a dealer for the latest information.

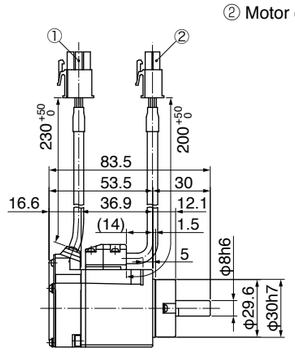

[* Use hexagon socket head screw for installation.]

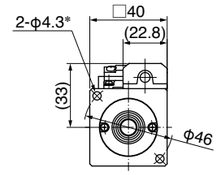

Key way dimensions
<Key way, center tap shaft>

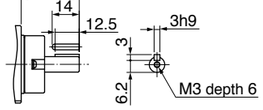

[Unit: mm]

* For motors specifications, refer to P.226.

MHMF 50 W

Leadwire type (IP65) · with brake · without oil seal · Round shaft/ Key way, center tap shaft

① Encoder connector
② Brake connector
③ Motor connector

Mass: 0.51 kg

● Motor model

Power supply	Shaft	Motor model No.
200 V	Round	MHMF5AZL1B2M
	Key-way, center tap	MHMF5AZL1T2M

● Dimensions are subject to change without notice. Contact us or a dealer for the latest information.

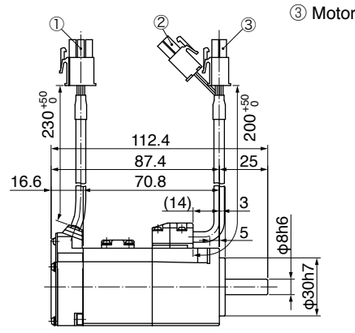

[* Use hexagon socket head screw for installation.]

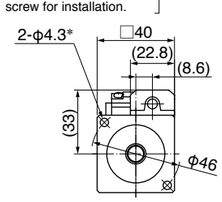

Key way dimensions
<Key way, center tap shaft>

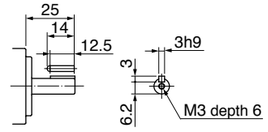

[Unit: mm]

Leadwire type (IP65) · with brake · with oil seal · Round shaft/ Key way, center tap shaft

① Encoder connector
② Brake connector
③ Motor connector

Mass: 0.53 kg

● Motor model

Power supply	Shaft	Motor model No.
200 V	Round	MHMF5AZL1D2M
	Key-way, center tap	MHMF5AZL1V2M

● Dimensions are subject to change without notice. Contact us or a dealer for the latest information.

[* Use hexagon socket head screw for installation.]

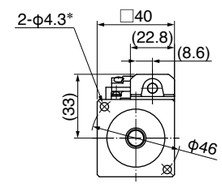

Key way dimensions
<Key way, center tap shaft>

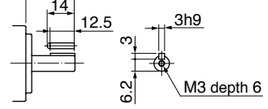

[Unit: mm]

Leadwire type (IP65) · with brake · with protective lip/ with oil seal · Round shaft/ Key way, center tap shaft

① Encoder connector
② Brake connector
③ Motor connector

Mass: 0.54 kg

● Motor model

Power supply	Shaft	Motor model No.
200 V	Round	MHMF5AZL1D4M
	Key-way, center tap	MHMF5AZL1V4M

● Dimensions are subject to change without notice. Contact us or a dealer for the latest information.

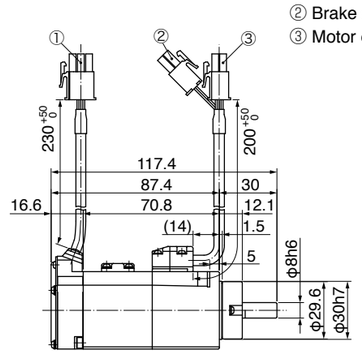

[* Use hexagon socket head screw for installation.]

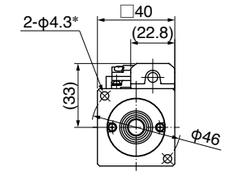

Key way dimensions
<Key way, center tap shaft>

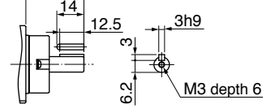

[Unit: mm]

* For motors specifications, refer to P.226.

MHMF 100 W

Leadwire type (IP65) · without brake · without oil seal · Round shaft/ Key way, center tap shaft

① Encoder connector
② Motor connector

Mass: 0.40 kg

● Motor model

Power supply	Shaft	Motor model No.
200 V	Round	MHMF012L1A2M
	Key-way, center tap	MHMF012L1S2M

● Dimensions are subject to change without notice. Contact us or a dealer for the latest information.

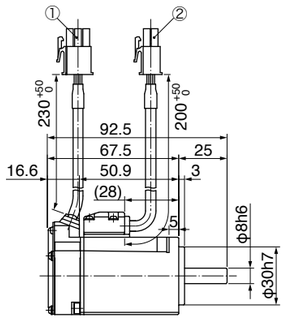

* Use hexagon socket head screw for installation.

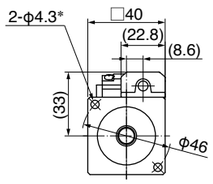

Key way dimensions
<Key way, center tap shaft>

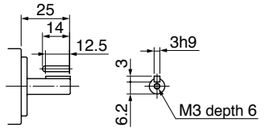

[Unit: mm]

Leadwire type (IP65) · without brake · with oil seal · Round shaft/ Key way, center tap shaft

① Encoder connector
② Motor connector

Mass: 0.42 kg

● Motor model

Power supply	Shaft	Motor model No.
200 V	Round	MHMF012L1C2M
	Key-way, center tap	MHMF012L1U2M

● Dimensions are subject to change without notice. Contact us or a dealer for the latest information.

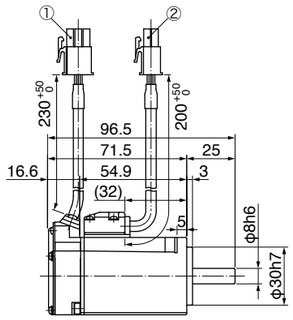

* Use hexagon socket head screw for installation.

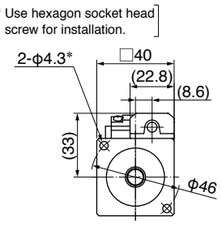

Key way dimensions
<Key way, center tap shaft>

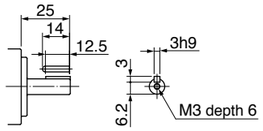

[Unit: mm]

Leadwire type (IP65) · without brake · with protective lip/ with oil seal · Round shaft/ Key way, center tap shaft

① Encoder connector
② Motor connector

Mass: 0.43 kg

● Motor model

Power supply	Shaft	Motor model No.
200 V	Round	MHMF012L1C4M
	Key-way, center tap	MHMF012L1U4M

● Dimensions are subject to change without notice. Contact us or a dealer for the latest information.

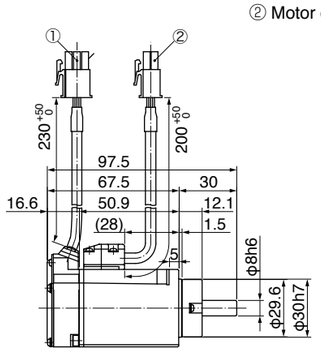

* Use hexagon socket head screw for installation.

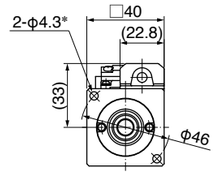

Key way dimensions
<Key way, center tap shaft>

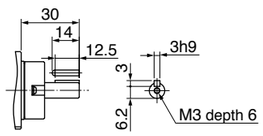

[Unit: mm]

* For motors specifications, refer to P.227.

MHMF 100 W

Leadwire type (IP65) · with brake · without oil seal · Round shaft/ Key way, center tap shaft

① Encoder connector
② Brake connector
③ Motor connector

Mass: 0.62 kg

● Motor model

Power supply	Shaft	Motor model No.
200 V	Round	MHMF012L1B2M
	Key-way, center tap	MHMF012L1T2M

● Dimensions are subject to change without notice. Contact us or a dealer for the latest information.

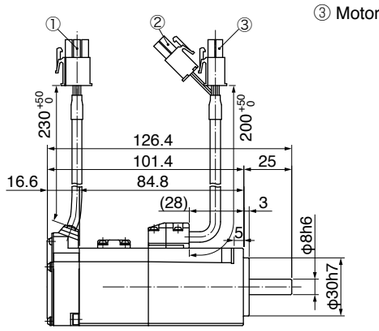

* Use hexagon socket head screw for installation.

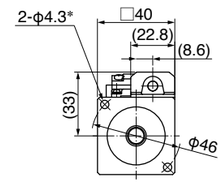

Key way dimensions
<Key way, center tap shaft>

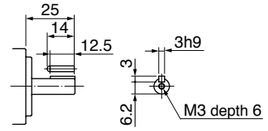

[Unit: mm]

Leadwire type (IP65) · with brake · with oil seal · Round shaft/ Key way, center tap shaft

① Encoder connector
② Brake connector
③ Motor connector

Mass: 0.64 kg

● Motor model

Power supply	Shaft	Motor model No.
200 V	Round	MHMF012L1D2M
	Key-way, center tap	MHMF012L1V2M

● Dimensions are subject to change without notice. Contact us or a dealer for the latest information.

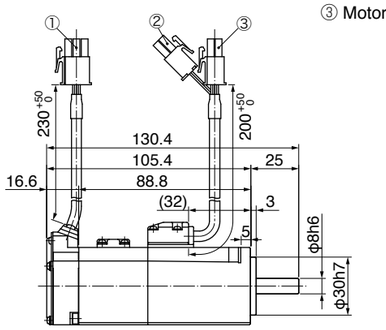

* Use hexagon socket head screw for installation.

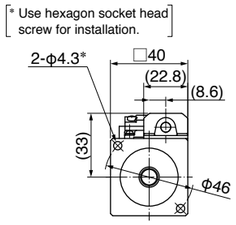

Key way dimensions
<Key way, center tap shaft>

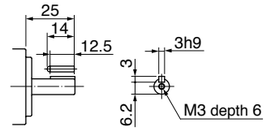

[Unit: mm]

Leadwire type (IP65) · with brake · with protective lip/ with oil seal · Round shaft/ Key way, center tap shaft

① Encoder connector
② Brake connector
③ Motor connector

Mass: 0.65 kg

● Motor model

Power supply	Shaft	Motor model No.
200 V	Round	MHMF012L1D4M
	Key-way, center tap	MHMF012L1V4M

● Dimensions are subject to change without notice. Contact us or a dealer for the latest information.

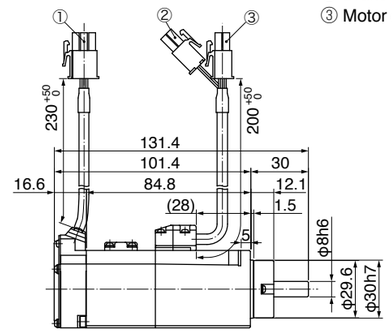

* Use hexagon socket head screw for installation.

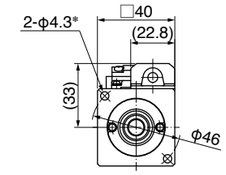

Key way dimensions
<Key way, center tap shaft>

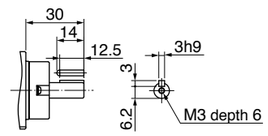

[Unit: mm]

* For motors specifications, refer to P.227.

MHMF 200 W

Leadwire type (IP65) · without brake · without oil seal · Round shaft/ Key way, center tap shaft

Mass: 0.75 kg

① Encoder connector
② Motor connector

● Motor model

Power supply	Shaft	Motor model No.
200 V	Round	MHMF022L1A2M
	Key-way, center tap	MHMF022L1S2M

● Dimensions are subject to change without notice. Contact us or a dealer for the latest information.

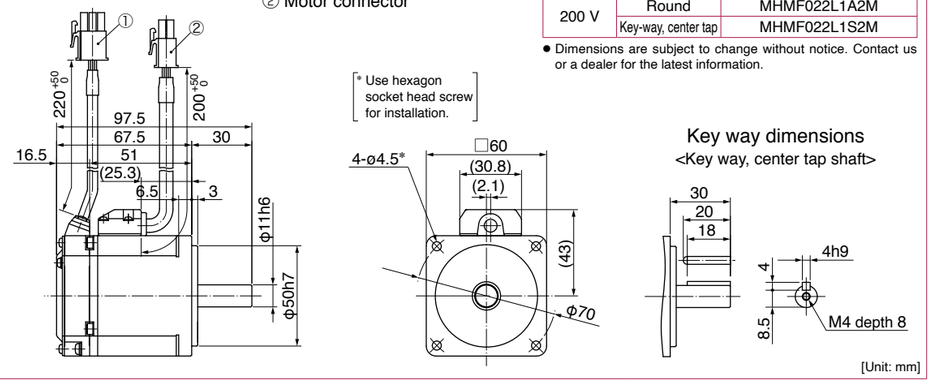

[* Use hexagon socket head screw for installation.]

Key way dimensions
<Key way, center tap shaft>

[Unit: mm]

Leadwire type (IP65) · without brake · with oil seal · Round shaft/ Key way, center tap shaft

Mass: 0.78 kg

① Encoder connector
② Motor connector

● Motor model

Power supply	Shaft	Motor model No.
200 V	Round	MHMF022L1C2M
	Key-way, center tap	MHMF022L1U2M

● Dimensions are subject to change without notice. Contact us or a dealer for the latest information.

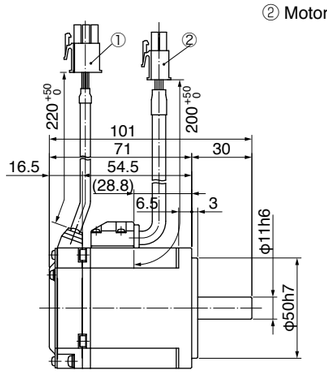

[* Use hexagon socket head screw for installation.]

Key way dimensions
<Key way, center tap shaft>

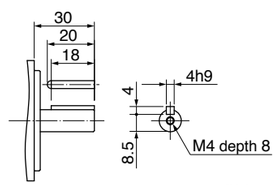

[Unit: mm]

Leadwire type (IP65) · without brake · with protective lip/ with oil seal · Round shaft/ Key way, center tap shaft

Mass: 0.81 kg

① Encoder connector
② Motor connector

● Motor model

Power supply	Shaft	Motor model No.
200 V	Round	MHMF022L1C4M
	Key-way, center tap	MHMF022L1U4M

● Dimensions are subject to change without notice. Contact us or a dealer for the latest information.

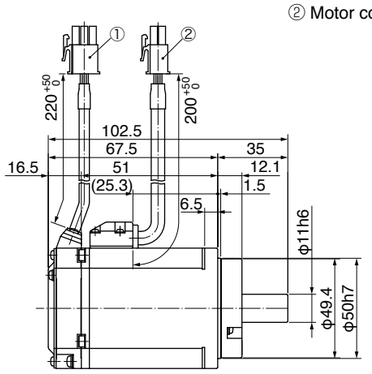

[* Use hexagon socket head screw for installation.]

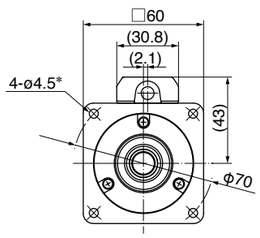

Key way dimensions
<Key way, center tap shaft>

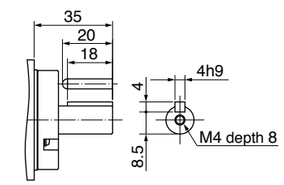

[Unit: mm]

* For motors specifications, refer to P.228.

MHMF 200 W

Leadwire type (IP65) · with brake · without oil seal · Round shaft/ Key way, center tap shaft

Mass: 1.1 kg

① Encoder connector
② Brake connector
③ Motor connector

● Motor model

Power supply	Shaft	Motor model No.
200 V	Round	MHMF022L1B2M
	Key-way, center tap	MHMF022L1T2M

● Dimensions are subject to change without notice. Contact us or a dealer for the latest information.

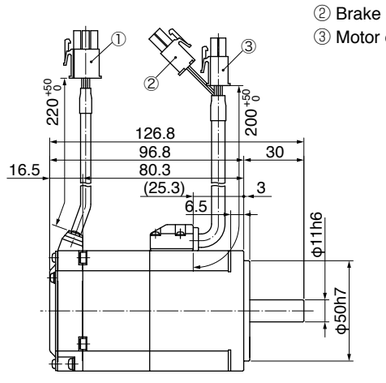

[* Use hexagon socket head screw for installation.]

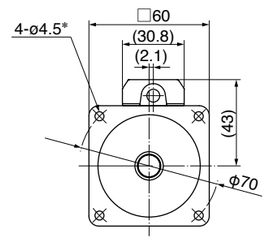

Key way dimensions
<Key way, center tap shaft>

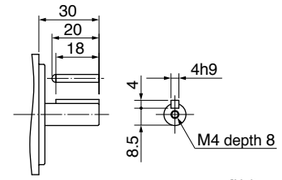

[Unit: mm]

Leadwire type (IP65) · with brake · with oil seal · Round shaft/ Key way, center tap shaft

Mass: 1.2 kg

① Encoder connector
② Brake connector
③ Motor connector

● Motor model

Power supply	Shaft	Motor model No.
200 V	Round	MHMF022L1D2M
	Key-way, center tap	MHMF022L1V2M

● Dimensions are subject to change without notice. Contact us or a dealer for the latest information.

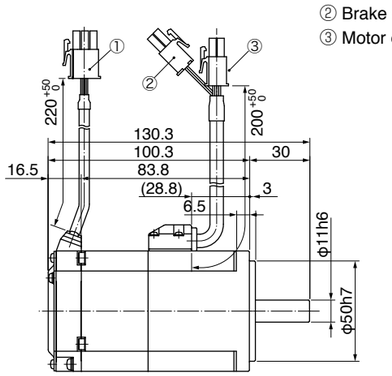

[* Use hexagon socket head screw for installation.]

Key way dimensions
<Key way, center tap shaft>

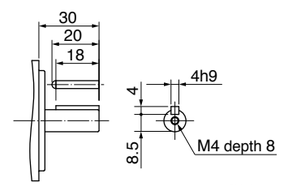

[Unit: mm]

Leadwire type (IP65) · with brake · with protective lip/ with oil seal · Round shaft/ Key way, center tap shaft

Mass: 1.2 kg

① Encoder connector
② Brake connector
③ Motor connector

● Motor model

Power supply	Shaft	Motor model No.
200 V	Round	MHMF022L1D4M
	Key-way, center tap	MHMF022L1V4M

● Dimensions are subject to change without notice. Contact us or a dealer for the latest information.

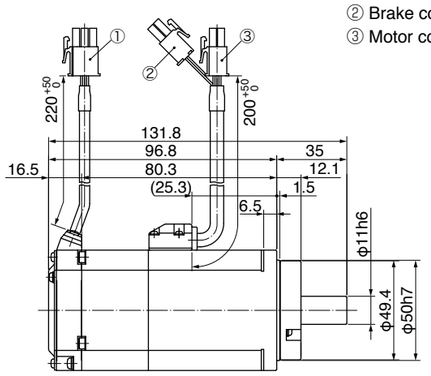

[* Use hexagon socket head screw for installation.]

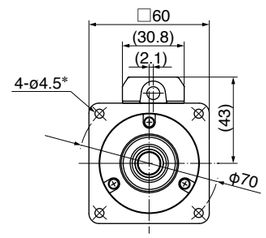

Key way dimensions
<Key way, center tap shaft>

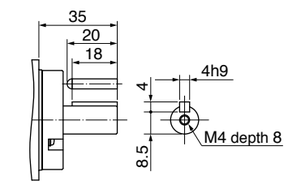

[Unit: mm]

* For motors specifications, refer to P.228.

MHMF 400 W

Leadwire type (IP65) · without brake · without oil seal · Round shaft/ Key way, center tap shaft

Mass: 1.1 kg

① Encoder connector
② Motor connector

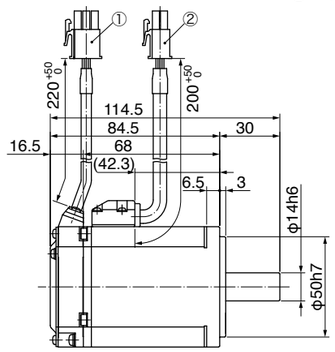

* Use hexagon socket head screw for installation.

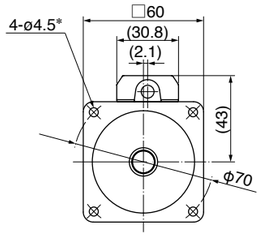

Key way dimensions
<Key way, center tap shaft>

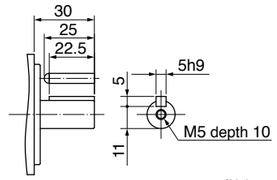

● Motor model

Power supply	Shaft	Motor model No.
200 V	Round	MHMF042L1A2M
	Key-way, center tap	MHMF042L1S2M

● Dimensions are subject to change without notice. Contact us or a dealer for the latest information.

[Unit: mm]

Leadwire type (IP65) · without brake · with oil seal · Round shaft/ Key way, center tap shaft

Mass: 1.2 kg

① Encoder connector
② Motor connector

* Use hexagon socket head screw for installation.

Key way dimensions
<Key way, center tap shaft>

● Motor model

Power supply	Shaft	Motor model No.
200 V	Round	MHMF042L1C2M
	Key-way, center tap	MHMF042L1U2M

● Dimensions are subject to change without notice. Contact us or a dealer for the latest information.

[Unit: mm]

Leadwire type (IP65) · without brake · with protective lip/ with oil seal · Round shaft/ Key way, center tap shaft

Mass: 1.2 kg

① Encoder connector
② Motor connector

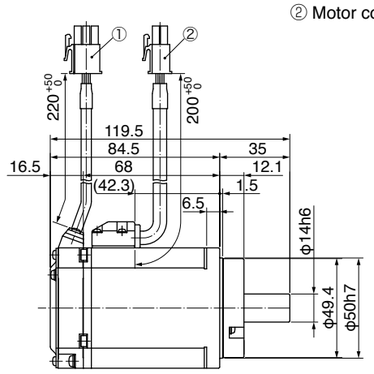

* Use hexagon socket head screw for installation.

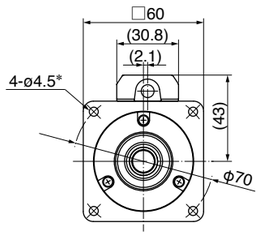

Key way dimensions
<Key way, center tap shaft>

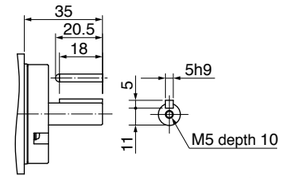

● Motor model

Power supply	Shaft	Motor model No.
200 V	Round	MHMF042L1C4M
	Key-way, center tap	MHMF042L1U4M

● Dimensions are subject to change without notice. Contact us or a dealer for the latest information.

[Unit: mm]

* For motors specifications, refer to P.229.

MHMF 400 W

Leadwire type (IP65) · with brake · without oil seal · Round shaft/ Key way, center tap shaft

Mass: 1.5 kg

① Encoder connector
② Brake connector
③ Motor connector

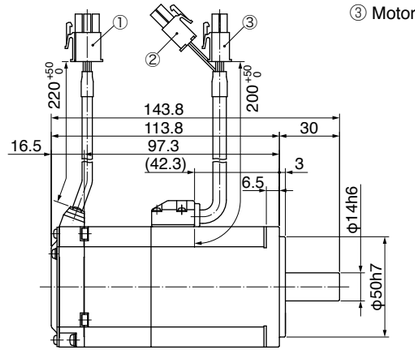

* Use hexagon socket head screw for installation.

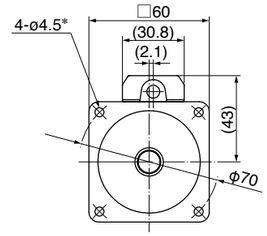

Key way dimensions
<Key way, center tap shaft>

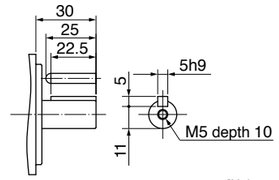

● Motor model

Power supply	Shaft	Motor model No.
200 V	Round	MHMF042L1B2M
	Key-way, center tap	MHMF042L1T2M

● Dimensions are subject to change without notice. Contact us or a dealer for the latest information.

[Unit: mm]

Leadwire type (IP65) · with brake · with oil seal · Round shaft/ Key way, center tap shaft

Mass: 1.6 kg

① Encoder connector
② Brake connector
③ Motor connector

* Use hexagon socket head screw for installation.

Key way dimensions
<Key way, center tap shaft>

● Motor model

Power supply	Shaft	Motor model No.
200 V	Round	MHMF042L1D2M
	Key-way, center tap	MHMF042L1V2M

● Dimensions are subject to change without notice. Contact us or a dealer for the latest information.

[Unit: mm]

Leadwire type (IP65) · with brake · with protective lip/ with oil seal · Round shaft/ Key way, center tap shaft

Mass: 1.6 kg

① Encoder connector
② Brake connector
③ Motor connector

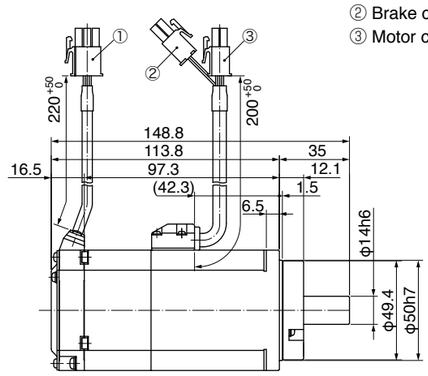

* Use hexagon socket head screw for installation.

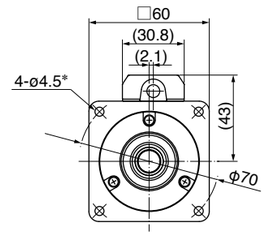

Key way dimensions
<Key way, center tap shaft>

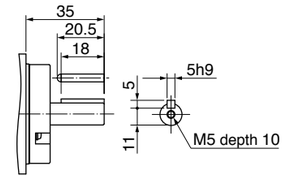

● Motor model

Power supply	Shaft	Motor model No.
200 V	Round	MHMF042L1D4M
	Key-way, center tap	MHMF042L1V4M

● Dimensions are subject to change without notice. Contact us or a dealer for the latest information.

[Unit: mm]

* For motors specifications, refer to P.229.

MHMF 750 W

Leadwire type (IP65) · without brake · without oil seal · Round shaft/ Key way, center tap shaft

Mass: 2.2 kg

① Encoder connector
② Motor connector

● Motor model

Power supply	Shaft	Motor model No.
200 V	Round	MHMF082L1A2M
	Key-way, center tap	MHMF082L1S2M

● Dimensions are subject to change without notice. Contact us or a dealer for the latest information.

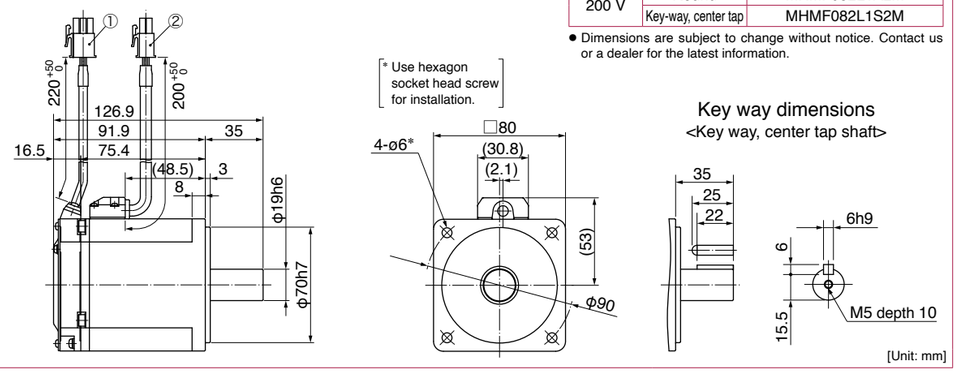

[* Use hexagon socket head screw for installation.]

Key way dimensions
<Key way, center tap shaft>

[Unit: mm]

Leadwire type (IP65) · without brake · with oil seal · Round shaft/ Key way, center tap shaft

Mass: 2.3 kg

① Encoder connector
② Motor connector

● Motor model

Power supply	Shaft	Motor model No.
200 V	Round	MHMF082L1C2M
	Key-way, center tap	MHMF082L1U2M

● Dimensions are subject to change without notice. Contact us or a dealer for the latest information.

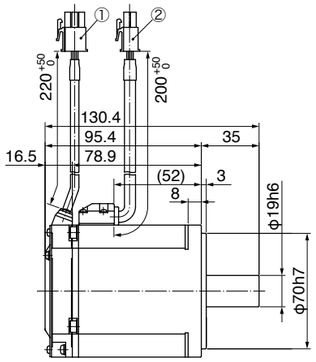

[* Use hexagon socket head screw for installation.]

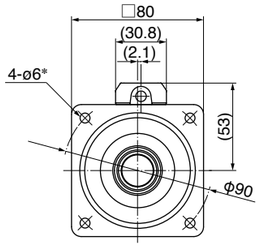

Key way dimensions
<Key way, center tap shaft>

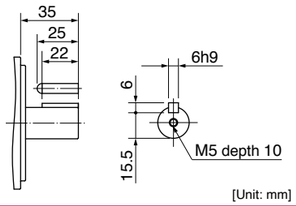

[Unit: mm]

Leadwire type (IP65) · without brake · with protective lip/ with oil seal · Round shaft/ Key way, center tap shaft

Mass: 2.4 kg

① Encoder connector
② Motor connector

● Motor model

Power supply	Shaft	Motor model No.
200 V	Round	MHMF082L1C4M
	Key-way, center tap	MHMF082L1U4M

● Dimensions are subject to change without notice. Contact us or a dealer for the latest information.

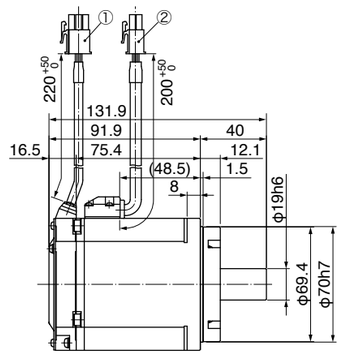

[* Use hexagon socket head screw for installation.]

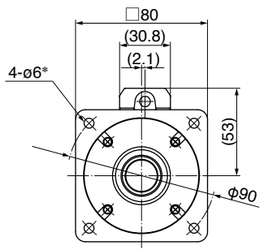

Key way dimensions
<Key way, center tap shaft>

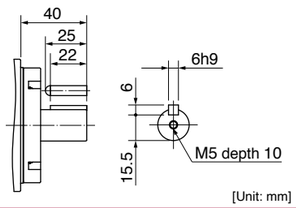

[Unit: mm]

* For motors specifications, refer to P.230.

MHMF 750 W

Leadwire type (IP65) · with brake · without oil seal · Round shaft/ Key way, center tap shaft

Mass: 2.9 kg

① Encoder connector
② Brake connector
③ Motor connector

● Motor model

Power supply	Shaft	Motor model No.
200 V	Round	MHMF082L1B2M
	Key-way, center tap	MHMF082L1T2M

● Dimensions are subject to change without notice. Contact us or a dealer for the latest information.

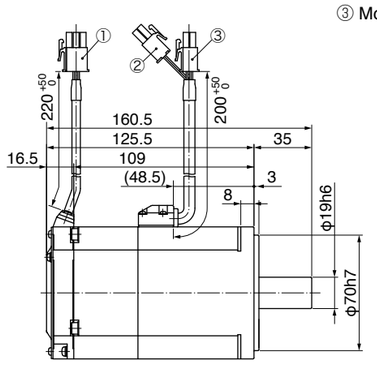

[* Use hexagon socket head screw for installation.]

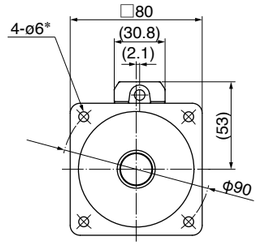

Key way dimensions
<Key way, center tap shaft>

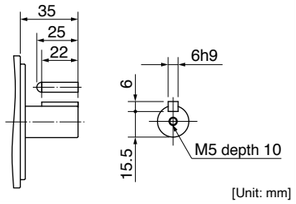

[Unit: mm]

Leadwire type (IP65) · with brake · with oil seal · Round shaft/ Key way, center tap shaft

Mass: 3.0 kg

① Encoder connector
② Brake connector
③ Motor connector

● Motor model

Power supply	Shaft	Motor model No.
200 V	Round	MHMF082L1D2M
	Key-way, center tap	MHMF082L1V2M

● Dimensions are subject to change without notice. Contact us or a dealer for the latest information.

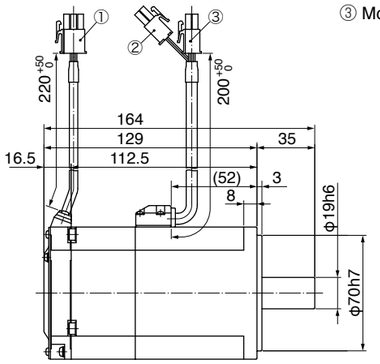

[* Use hexagon socket head screw for installation.]

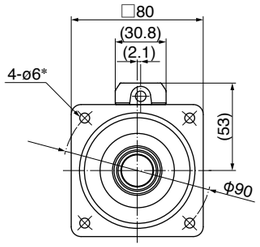

Key way dimensions
<Key way, center tap shaft>

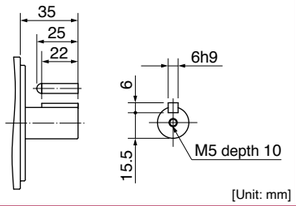

[Unit: mm]

Leadwire type (IP65) · with brake · with protective lip/ with oil seal · Round shaft/ Key way, center tap shaft

Mass: 3.1 kg

① Encoder connector
② Brake connector
③ Motor connector

● Motor model

Power supply	Shaft	Motor model No.
200 V	Round	MHMF082L1D4M
	Key-way, center tap	MHMF082L1V4M

● Dimensions are subject to change without notice. Contact us or a dealer for the latest information.

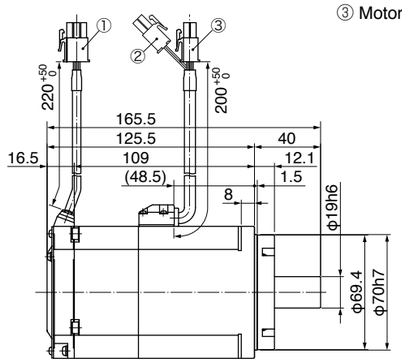

[* Use hexagon socket head screw for installation.]

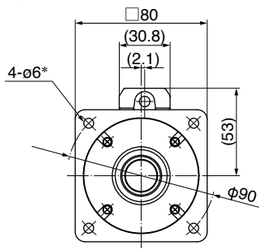

Key way dimensions
<Key way, center tap shaft>

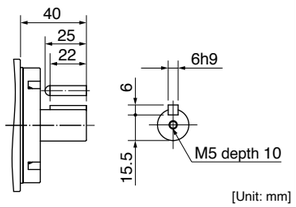

[Unit: mm]

* For motors specifications, refer to P.230.

MHMF 1000 W

Leadwire type (IP65) · without brake · without oil seal · Round shaft/ Key way, center tap shaft

Mass: 2.7 kg

① Encoder connector
② Motor connector

● Motor model

Power supply	Shaft	Motor model No.
200 V	Round	MHMF092L1A2M
	Key-way, center tap	MHMF092L1S2M

● Dimensions are subject to change without notice. Contact us or a dealer for the latest information.

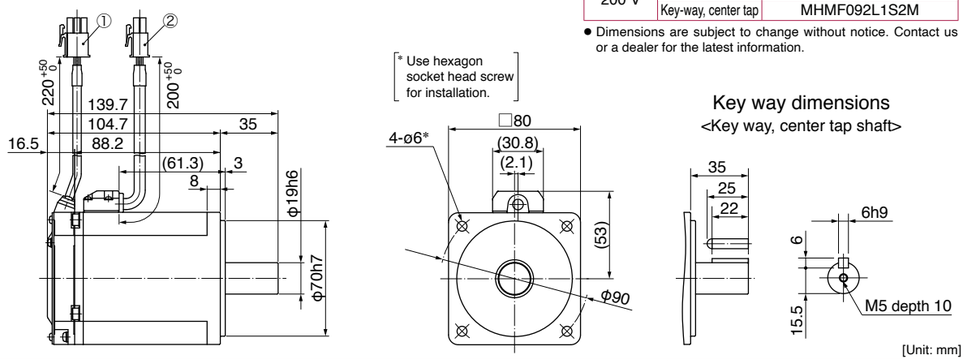

Key way dimensions
<Key way, center tap shaft>

[Unit: mm]

Leadwire type (IP65) · without brake · with oil seal · Round shaft/ Key way, center tap shaft

Mass: 2.8 kg

① Encoder connector
② Motor connector

● Motor model

Power supply	Shaft	Motor model No.
200 V	Round	MHMF092L1C2M
	Key-way, center tap	MHMF092L1U2M

● Dimensions are subject to change without notice. Contact us or a dealer for the latest information.

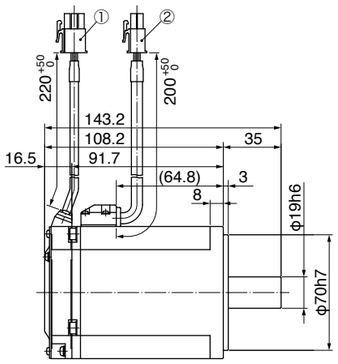

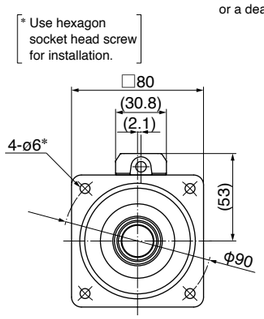

Key way dimensions
<Key way, center tap shaft>

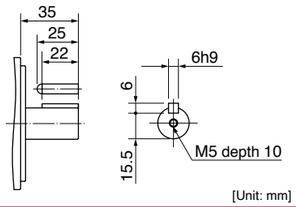

[Unit: mm]

Leadwire type (IP65) · without brake · with protective lip/ with oil seal · Round shaft/ Key way, center tap shaft

Mass: 2.9 kg

① Encoder connector
② Motor connector

● Motor model

Power supply	Shaft	Motor model No.
200 V	Round	MHMF092L1C4M
	Key-way, center tap	MHMF092L1U4M

● Dimensions are subject to change without notice. Contact us or a dealer for the latest information.

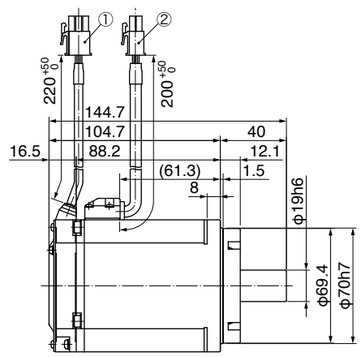

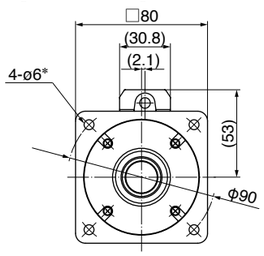

Key way dimensions
<Key way, center tap shaft>

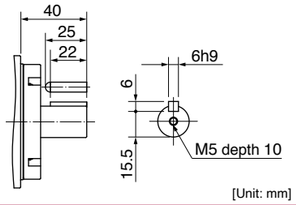

[Unit: mm]

* For motors specifications, refer to P.231.

MHMF 1000 W

Leadwire type (IP65) · with brake · without oil seal · Round shaft/ Key way, center tap shaft

Mass: 3.4 kg

① Encoder connector
② Brake connector
③ Motor connector

● Motor model

Power supply	Shaft	Motor model No.
200 V	Round	MHMF092L1B2M
	Key-way, center tap	MHMF092L1T2M

● Dimensions are subject to change without notice. Contact us or a dealer for the latest information.

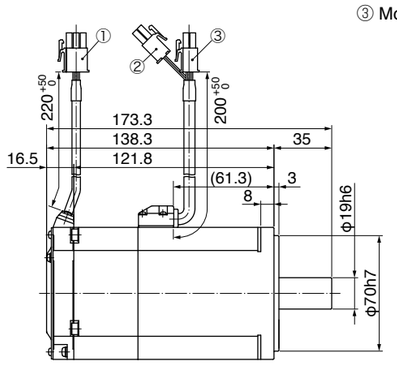

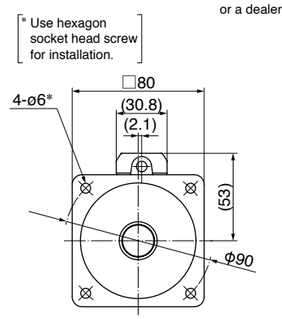

Key way dimensions
<Key way, center tap shaft>

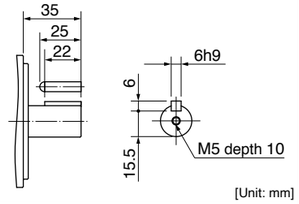

[Unit: mm]

Leadwire type (IP65) · with brake · with oil seal · Round shaft/ Key way, center tap shaft

Mass: 3.5 kg

① Encoder connector
② Brake connector
③ Motor connector

● Motor model

Power supply	Shaft	Motor model No.
200 V	Round	MHMF092L1D2M
	Key-way, center tap	MHMF092L1V2M

● Dimensions are subject to change without notice. Contact us or a dealer for the latest information.

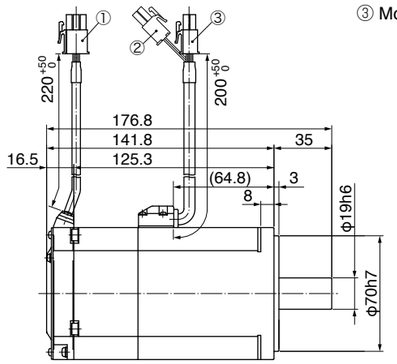

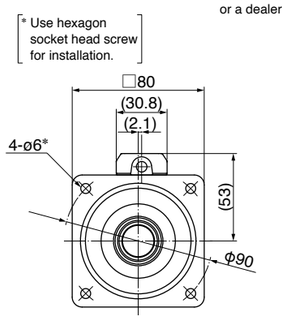

Key way dimensions
<Key way, center tap shaft>

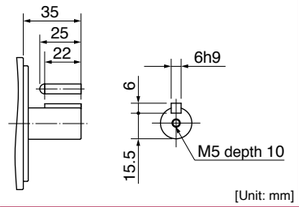

[Unit: mm]

Leadwire type (IP65) · with brake · with protective lip/ with oil seal · Round shaft/ Key way, center tap shaft

Mass: 3.6 kg

① Encoder connector
② Brake connector
③ Motor connector

● Motor model

Power supply	Shaft	Motor model No.
200 V	Round	MHMF092L1D4M
	Key-way, center tap	MHMF092L1V4M

● Dimensions are subject to change without notice. Contact us or a dealer for the latest information.

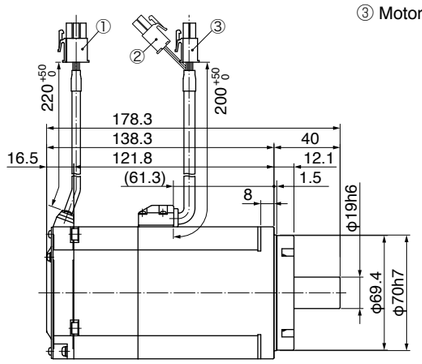

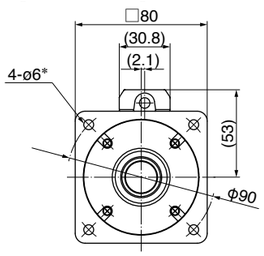

Key way dimensions
<Key way, center tap shaft>

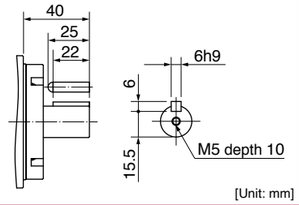

[Unit: mm]

* For motors specifications, refer to P.231.

Special Order Product

MHMF 1.0 kW to 1.5 kW

MHMF 1.0 kW

Large size connector (JL10) type ・ without brake ・ with oil seal/ with protective lip ・ Key way shaft/ Round shaft

① Encoder connector (Large size JL10)
② Motor connector

Mass: 6.1 kg

● Motor model

Power supply	Shaft	with oil seal	with protective lip
200 V	Round	MHMF102L1C6M	MHMF102L1C8M
	Key-way	MHMF102L1G6M	MHMF102L1G8M

● Dimensions are subject to change without notice. Contact us or a dealer for the latest information.

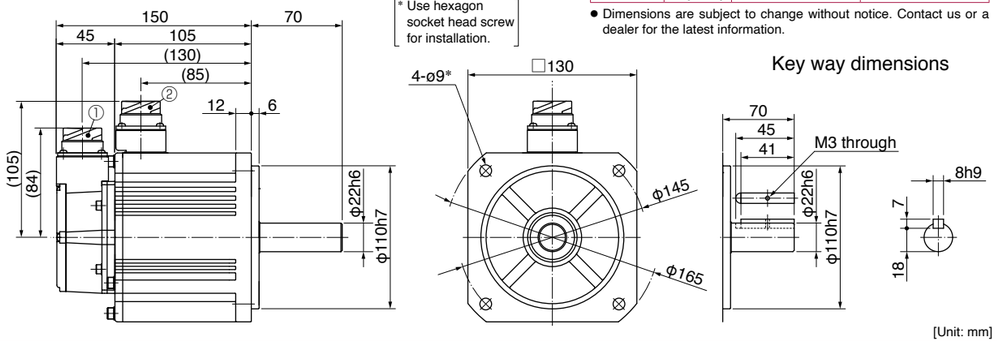

[Unit: mm]

Large size connector (JL10) type ・ with brake ・ with oil seal/ with protective lip ・ Key way shaft/ Round shaft

① Encoder connector (Large size JL10)
② Motor/Brake connector

Mass: 7.6 kg

● Motor model

Power supply	Shaft	with oil seal	with protective lip
200 V	Round	MHMF102L1D6M	MHMF102L1D8M
	Key-way	MHMF102L1H6M	MHMF102L1H8M

● Dimensions are subject to change without notice. Contact us or a dealer for the latest information.

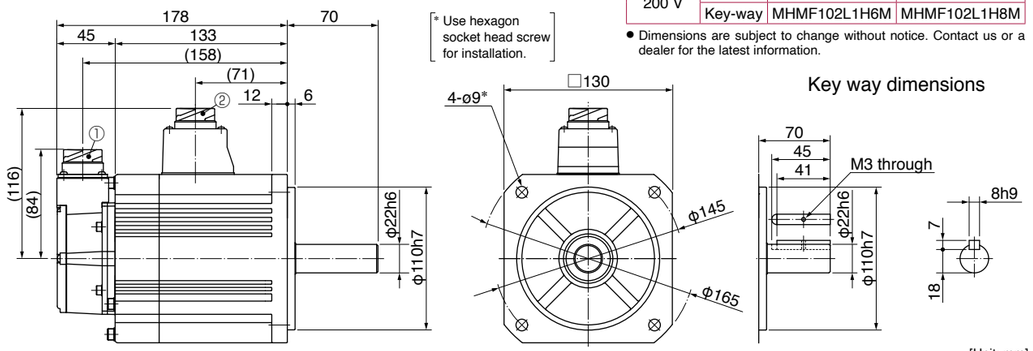

[Unit: mm]

MHMF 1.5 kW

Large size connector (JL10) type ・ without brake ・ with oil seal/ with protective lip ・ Key way shaft/ Round shaft

① Encoder connector (Large size JL10)
② Motor connector

Mass: 7.7 kg

● Motor model

Power supply	Shaft	with oil seal	with protective lip
200 V	Round	MHMF152L1C6M	MHMF152L1C8M
	Key-way	MHMF152L1G6M	MHMF152L1G8M

● Dimensions are subject to change without notice. Contact us or a dealer for the latest information.

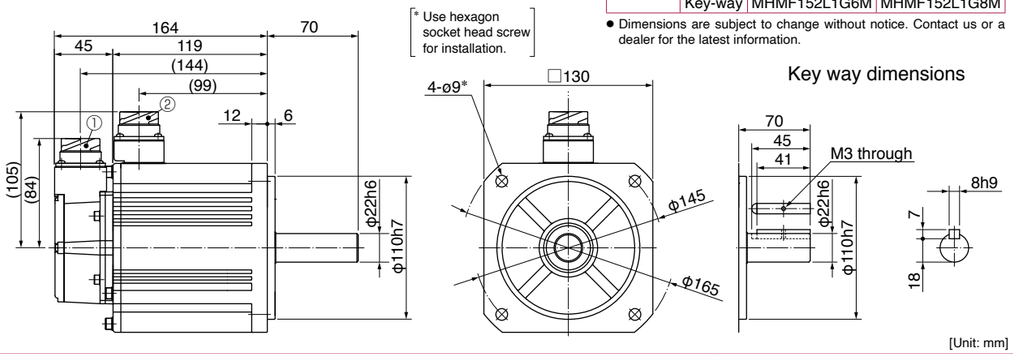

[Unit: mm]

* For motors specifications, refer to P.232, P.233.

Special Order Product

MHMF 1.5 kW to 2.0 kW

MHMF 1.5 kW

Large size connector (JL10) type ・ with brake ・ with oil seal/ with protective lip ・ Key way shaft/ Round shaft

① Encoder connector (Large size JL10)
② Motor/Brake connector

Mass: 9.2 kg

● Motor model

Power supply	Shaft	with oil seal	with protective lip
200 V	Round	MHMF152L1D6M	MHMF152L1D8M
	Key-way	MHMF152L1H6M	MHMF152L1H8M

● Dimensions are subject to change without notice. Contact us or a dealer for the latest information.

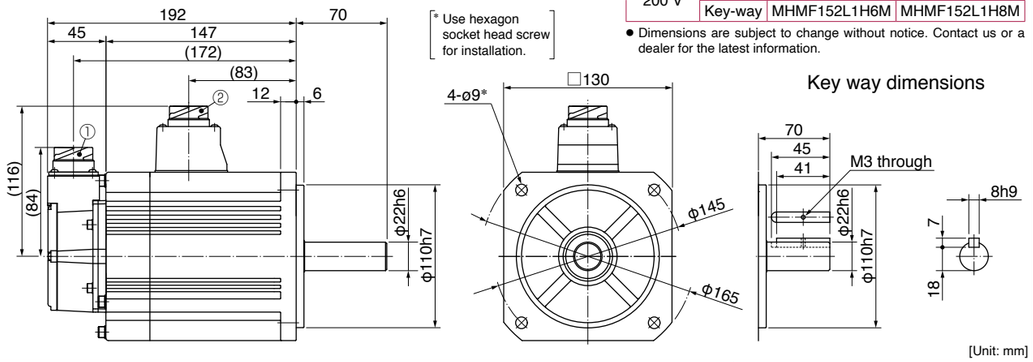

[Unit: mm]

MHMF 2.0 kW

Large size connector (JL10) type ・ without brake ・ with oil seal/ with protective lip ・ Key way shaft/ Round shaft

① Encoder connector (Large size JL10)
② Motor connector

Mass: 11.3 kg

● Motor model

Power supply	Shaft	with oil seal	with protective lip
200 V	Round	MHMF202L1C6M	MHMF202L1C8M
	Key-way	MHMF202L1G6M	MHMF202L1G8M

● Dimensions are subject to change without notice. Contact us or a dealer for the latest information.

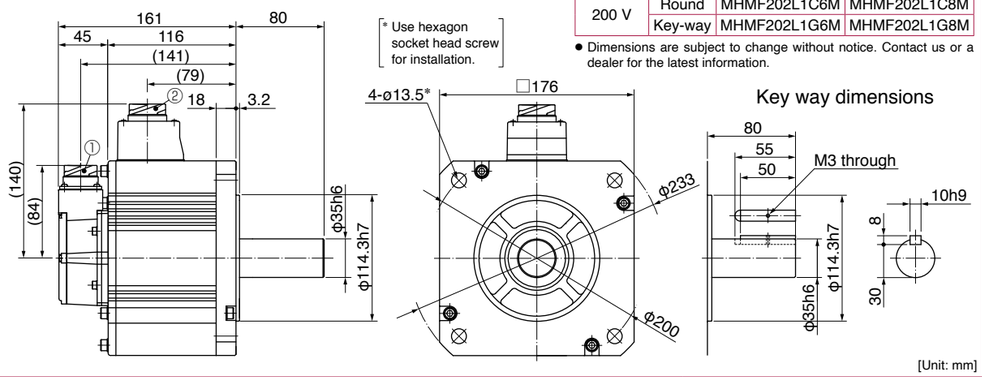

[Unit: mm]

Large size connector (JL10) type ・ with brake ・ with oil seal/ with protective lip ・ Key way shaft/ Round shaft

① Encoder connector (Large size JL10)
② Motor/Brake connector

Mass: 14.6 kg

● Motor model

Power supply	Shaft	with oil seal	with protective lip
200 V	Round	MHMF202L1D6M	MHMF202L1D8M
	Key-way	MHMF202L1H6M	MHMF202L1H8M

● Dimensions are subject to change without notice. Contact us or a dealer for the latest information.

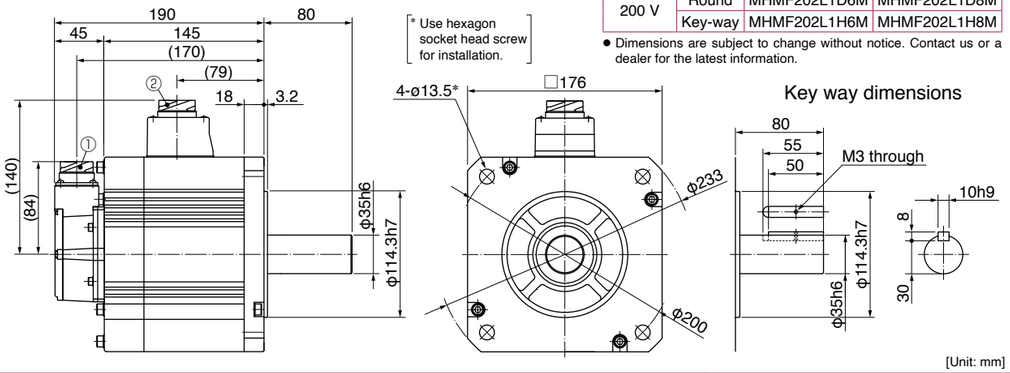

[Unit: mm]

* For motors specifications, refer to P.233, P.234.

Special Order Product

MHMF 3.0 kW to 4.0 kW

MHMF 3.0 kW

Large size connector (JL10) type ・ without brake ・ with oil seal/ with protective lip ・ Key way shaft/ Round shaft

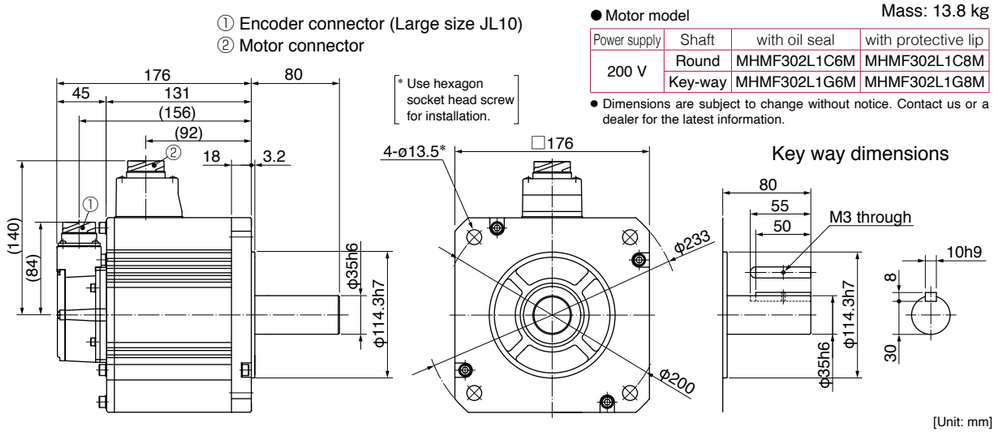

● Motor model — Mass: 13.8 kg

Power supply	Shaft	with oil seal	with protective lip
200 V	Round	MHMF302L1C6M	MHMF302L1C8M
	Key-way	MHMF302L1G6M	MHMF302L1G8M

● Dimensions are subject to change without notice. Contact us or a dealer for the latest information.

[Unit: mm]

Large size connector (JL10) type ・ with brake ・ with oil seal/ with protective lip ・ Key way shaft/ Round shaft

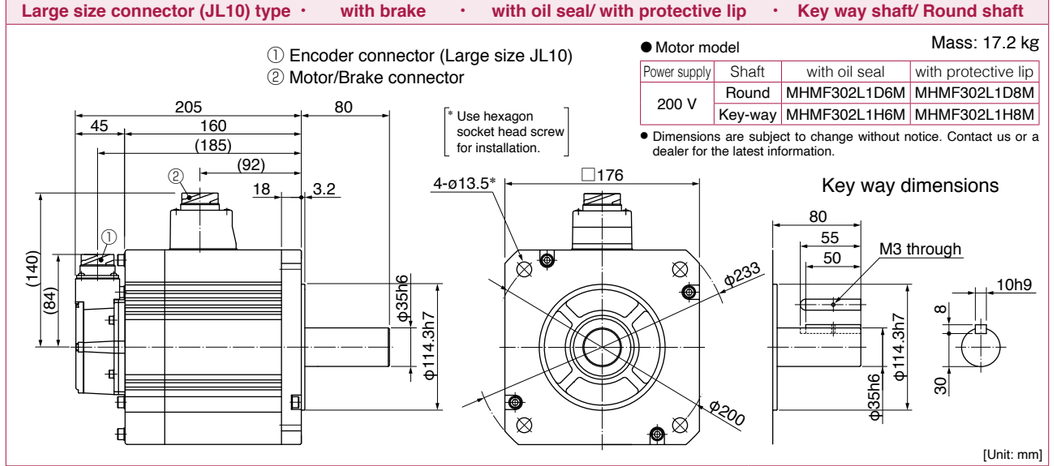

● Motor model — Mass: 17.2 kg

Power supply	Shaft	with oil seal	with protective lip
200 V	Round	MHMF302L1D6M	MHMF302L1D8M
	Key-way	MHMF302L1H6M	MHMF302L1H8M

● Dimensions are subject to change without notice. Contact us or a dealer for the latest information.

[Unit: mm]

MHMF 4.0 kW

Large size connector (JL10) type ・ without brake ・ with oil seal/ with protective lip ・ Key way shaft/ Round shaft

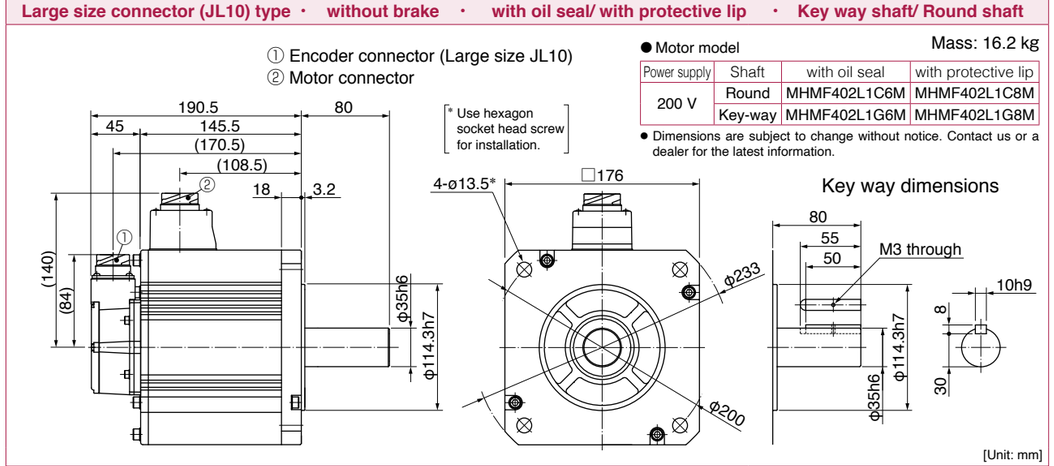

● Motor model — Mass: 16.2 kg

Power supply	Shaft	with oil seal	with protective lip
200 V	Round	MHMF402L1C6M	MHMF402L1C8M
	Key-way	MHMF402L1G6M	MHMF402L1G8M

● Dimensions are subject to change without notice. Contact us or a dealer for the latest information.

[Unit: mm]

* For motors specifications, refer to P.235, P.236.

Special Order Product

MHMF 4.0 kW to 5.0 kW

MHMF 4.0 kW

Large size connector (JL10) type ・ with brake ・ with oil seal/ with protective lip ・ Key way shaft/ Round shaft

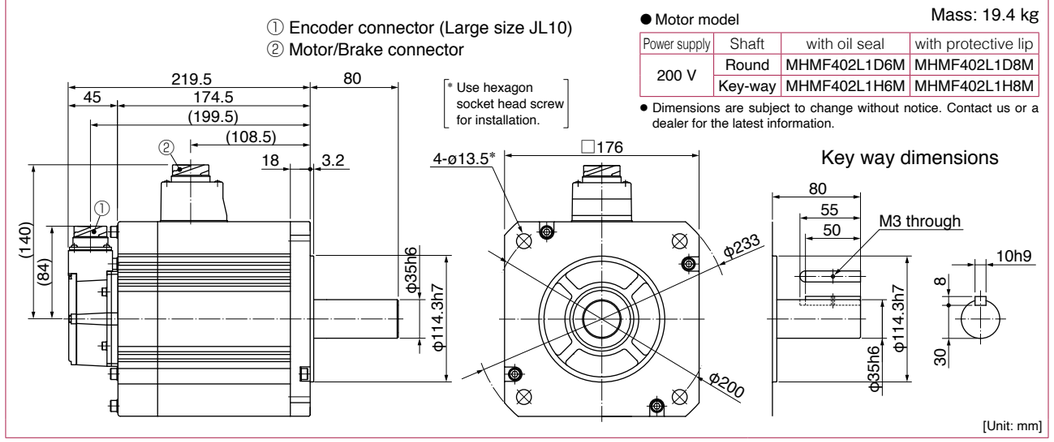

● Motor model — Mass: 19.4 kg

Power supply	Shaft	with oil seal	with protective lip
200 V	Round	MHMF402L1D6M	MHMF402L1D8M
	Key-way	MHMF402L1H6M	MHMF402L1H8M

● Dimensions are subject to change without notice. Contact us or a dealer for the latest information.

[Unit: mm]

MHMF 5.0 kW

Large size connector (JL10) type ・ without brake ・ with oil seal/ with protective lip ・ Key way shaft/ Round shaft

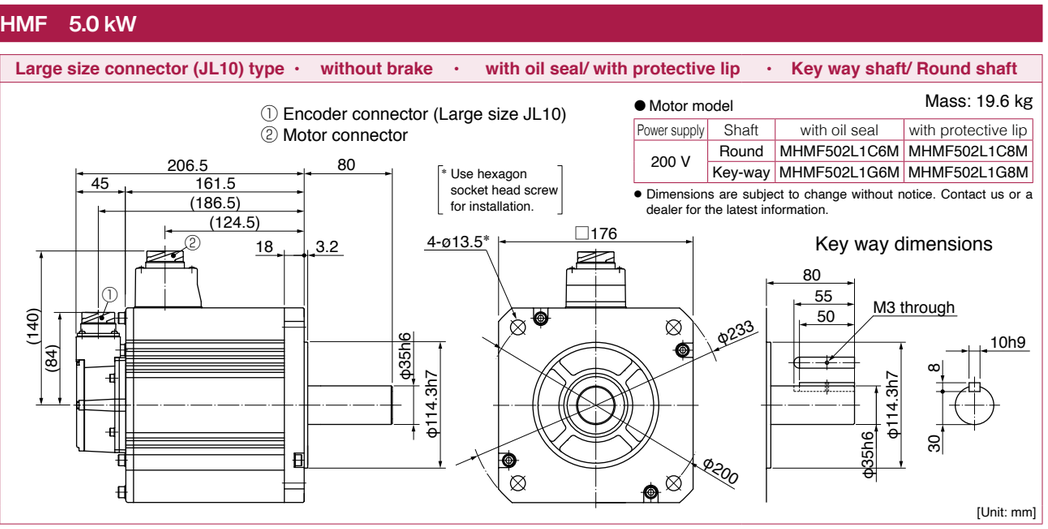

● Motor model — Mass: 19.6 kg

Power supply	Shaft	with oil seal	with protective lip
200 V	Round	MHMF502L1C6M	MHMF502L1C8M
	Key-way	MHMF502L1G6M	MHMF502L1G8M

● Dimensions are subject to change without notice. Contact us or a dealer for the latest information.

[Unit: mm]

Large size connector (JL10) type ・ with brake ・ with oil seal/ with protective lip ・ Key way shaft/ Round shaft

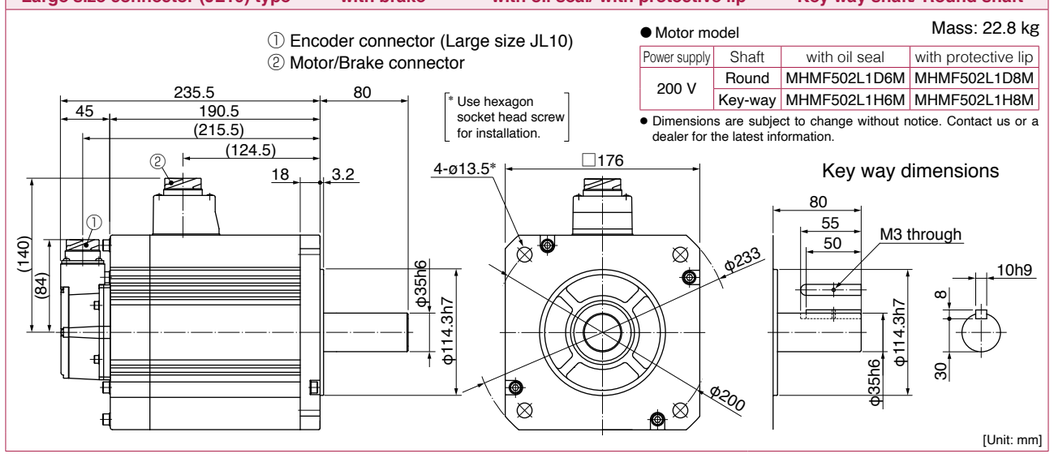

● Motor model — Mass: 22.8 kg

Power supply	Shaft	with oil seal	with protective lip
200 V	Round	MHMF502L1D6M	MHMF502L1D8M
	Key-way	MHMF502L1H6M	MHMF502L1H8M

● Dimensions are subject to change without notice. Contact us or a dealer for the latest information.

[Unit: mm]

* For motors specifications, refer to P.236, P.237.

Special Order Product

MHMF 7.5 kW / MDMF 1.0 kW

MHMF 7.5 kW

Large size connector (JL10) type · without brake · with oil seal · Key way shaft/ Round shaft

Mass: 34.8 kg

① Encoder connector (Large size JL10)
② Motor connector

● Motor model

Power supply	Shaft	with oil seal
200 V	Round	MHMF752L1C6M
	Key-way	MHMF752L1G6M

● Dimensions are subject to change without notice. Contact us or a dealer for the latest information.

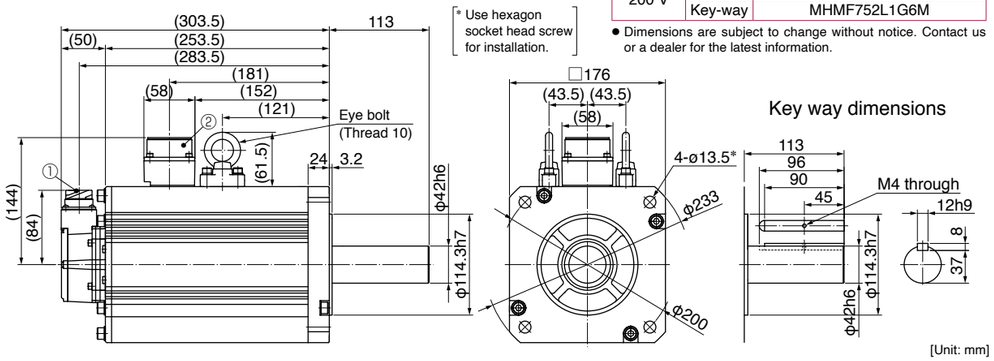

[Unit: mm]

Large size connector (JL10) type · with brake · with oil seal · Key way shaft/ Round shaft

Mass: 38.9 kg

① Encoder connector (Large size JL10)
② Motor connector ③ Brake connector

● Motor model

Power supply	Shaft	with oil seal
200 V	Round	MHMF752L1D6M
	Key-way	MHMF752L1H6M

● Dimensions are subject to change without notice. Contact us or a dealer for the latest information.

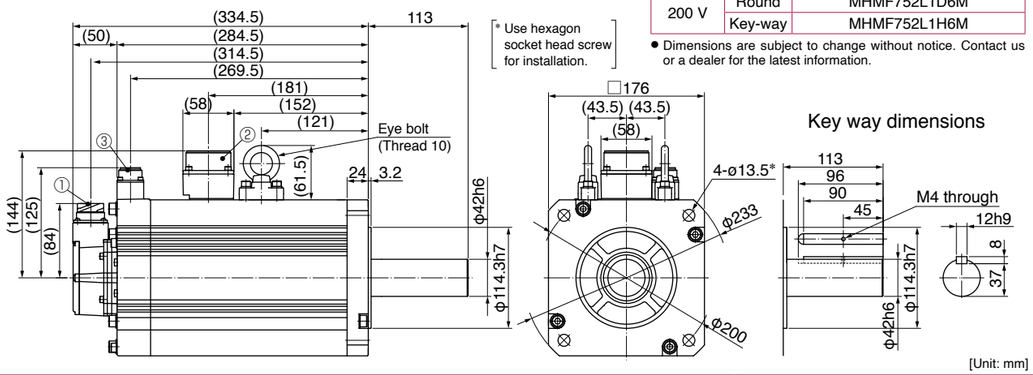

[Unit: mm]

MDMF 1.0 kW

Large size connector (JL10) type · without brake · with oil seal/ with protective lip · Key way shaft/ Round shaft

Mass: 4.6 kg

① Encoder connector (Large size JL10)
② Motor connector

● Motor model

Power supply	Shaft	with oil seal	with protective lip
200 V	Round	MDMF102L1C6M	MDMF102L1C8M
	Key-way	MDMF102L1G6M	MDMF102L1G8M

● Dimensions are subject to change without notice. Contact us or a dealer for the latest information.

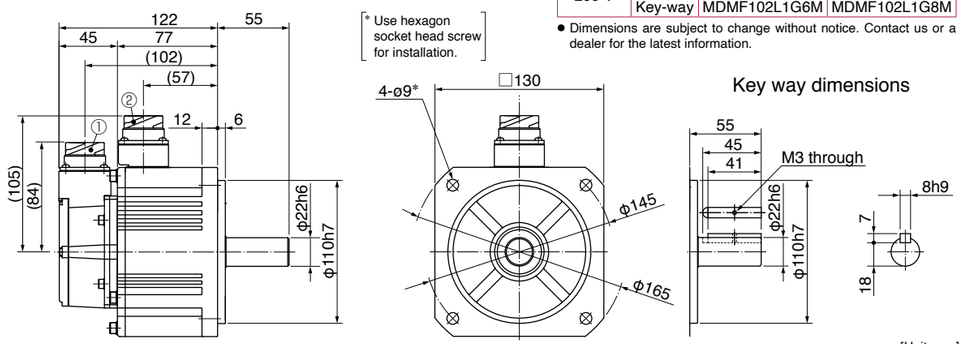

[Unit: mm]

* For motors specifications, refer to P.238, P.239.

Special Order Product

MDMF 1.0 kW to 1.5 kW

MDMF 1.0 kW

Large size connector (JL10) type · with brake · with oil seal/ with protective lip · Key way shaft/ Round shaft

Mass: 6.1 kg

① Encoder connector (Large size JL10)
② Motor/Brake connector

● Motor model

Power supply	Shaft	with oil seal	with protective lip
200 V	Round	MDMF102L1D6M	MDMF102L1D8M
	Key-way	MDMF102L1H6M	MDMF102L1H8M

● Dimensions are subject to change without notice. Contact us or a dealer for the latest information.

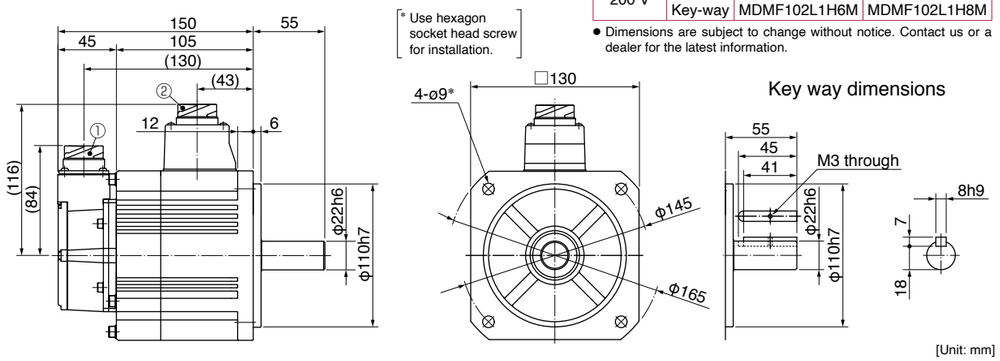

[Unit: mm]

MDMF 1.5 kW

Large size connector (JL10) type · without brake · with oil seal/ with protective lip · Key way shaft/ Round shaft

Mass: 5.7 kg

① Encoder connector (Large size JL10)
② Motor connector

● Motor model

Power supply	Shaft	with oil seal	with protective lip
200 V	Round	MDMF152L1C6M	MDMF152L1C8M
	Key-way	MDMF152L1G6M	MDMF152L1G8M

● Dimensions are subject to change without notice. Contact us or a dealer for the latest information.

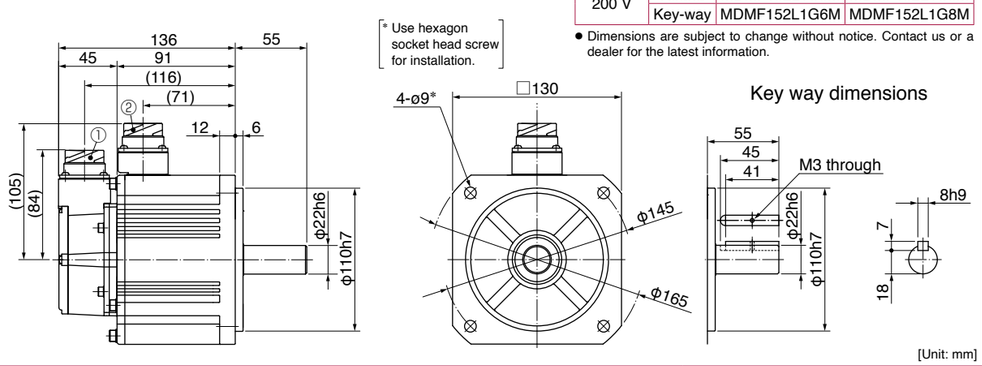

[Unit: mm]

Large size connector (JL10) type · with brake · with oil seal/ with protective lip · Key way shaft/ Round shaft

Mass: 7.2 kg

① Encoder connector (Large size JL10)
② Motor/Brake connector

● Motor model

Power supply	Shaft	with oil seal	with protective lip
200 V	Round	MDMF152L1D6M	MDMF152L1D8M
	Key-way	MDMF152L1H6M	MDMF152L1H8M

● Dimensions are subject to change without notice. Contact us or a dealer for the latest information.

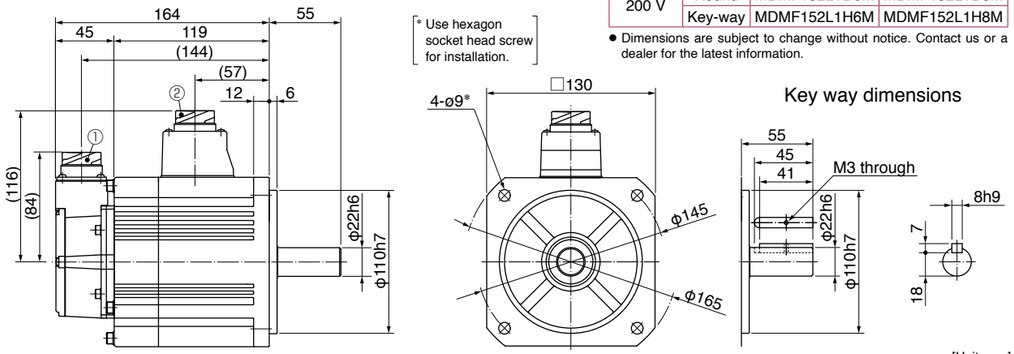

[Unit: mm]

* For motors specifications, refer to P.239, P.240.

Special Order Product

MDMF 2.0 kW to 3.0 kW

MDMF 2.0 kW

Large size connector (JL10) type ・ without brake ・ with oil seal/ with protective lip ・ Key way shaft/ Round shaft

① Encoder connector (Large size JL10)
② Motor connector

Mass: 6.9 kg

● Motor model

Power supply	Shaft	with oil seal	with protective lip
200 V	Round	MDMF202L1C6M	MDMF202L1C8M
	Key-way	MDMF202L1G6M	MDMF202L1G8M

● Dimensions are subject to change without notice. Contact us or a dealer for the latest information.

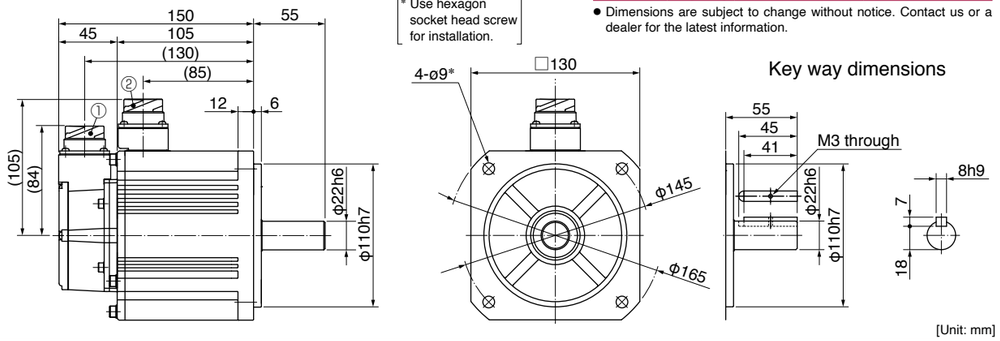

[Unit: mm]

Large size connector (JL10) type ・ with brake ・ with oil seal/ with protective lip ・ Key way shaft/ Round shaft

① Encoder connector (Large size JL10)
② Motor/Brake connector

Mass: 8.4 kg

● Motor model

Power supply	Shaft	with oil seal	with protective lip
200 V	Round	MDMF202L1D6M	MDMF202L1D8M
	Key-way	MDMF202L1H6M	MDMF202L1H8M

● Dimensions are subject to change without notice. Contact us or a dealer for the latest information.

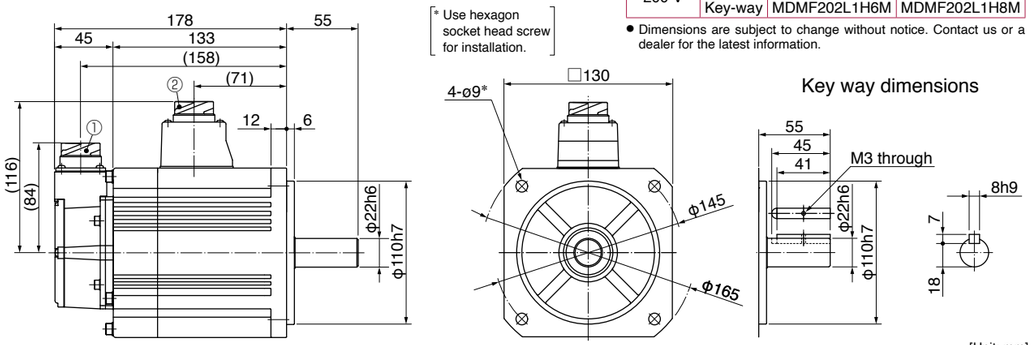

[Unit: mm]

MDMF 3.0 kW

Large size connector (JL10) type ・ without brake ・ with oil seal/ with protective lip ・ Key way shaft/ Round shaft

① Encoder connector (Large size JL10)
② Motor connector

Mass: 9.3 kg

● Motor model

Power supply	Shaft	with oil seal	with protective lip
200 V	Round	MDMF302L1C6M	MDMF302L1C8M
	Key-way	MDMF302L1G6M	MDMF302L1G8M

● Dimensions are subject to change without notice. Contact us or a dealer for the latest information.

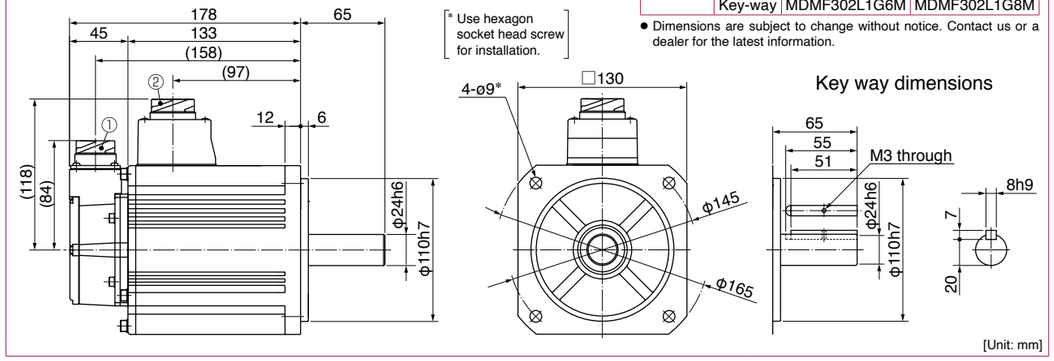

[Unit: mm]

* For motors specifications, refer to P.241, P.242.

Special Order Product

MDMF 3.0 kW to 4.0 kW

MDMF 3.0 kW

Large size connector (JL10) type ・ with brake ・ with oil seal/ with protective lip ・ Key way shaft/ Round shaft

① Encoder connector (Large size JL10)
② Motor/Brake connector

Mass: 10.9 kg

● Motor model

Power supply	Shaft	with oil seal	with protective lip
200 V	Round	MDMF302L1D6M	MDMF302L1D8M
	Key-way	MDMF302L1H6M	MDMF302L1H8M

● Dimensions are subject to change without notice. Contact us or a dealer for the latest information.

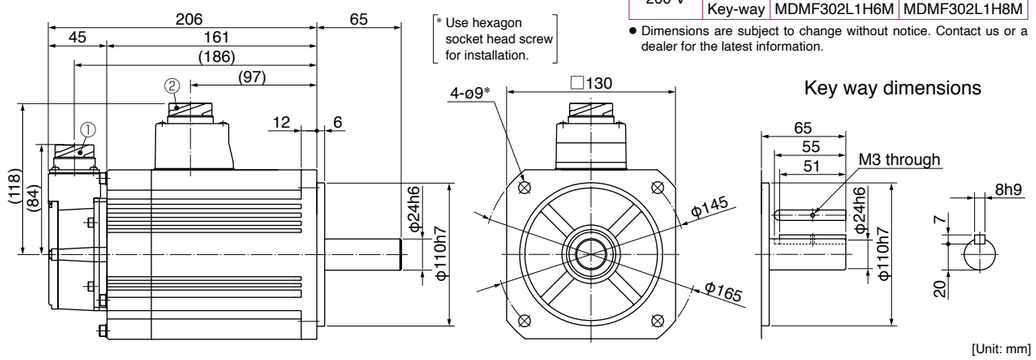

[Unit: mm]

MDMF 4.0 kW

Large size connector (JL10) type ・ without brake ・ with oil seal/ with protective lip ・ Key way shaft/ Round shaft

① Encoder connector (Large size JL10)
② Motor connector

Mass: 13.4 kg

● Motor model

Power supply	Shaft	with oil seal	with protective lip
200 V	Round	MDMF402L1C6M	MDMF402L1C8M
	Key-way	MDMF402L1G6M	MDMF402L1G8M

● Dimensions are subject to change without notice. Contact us or a dealer for the latest information.

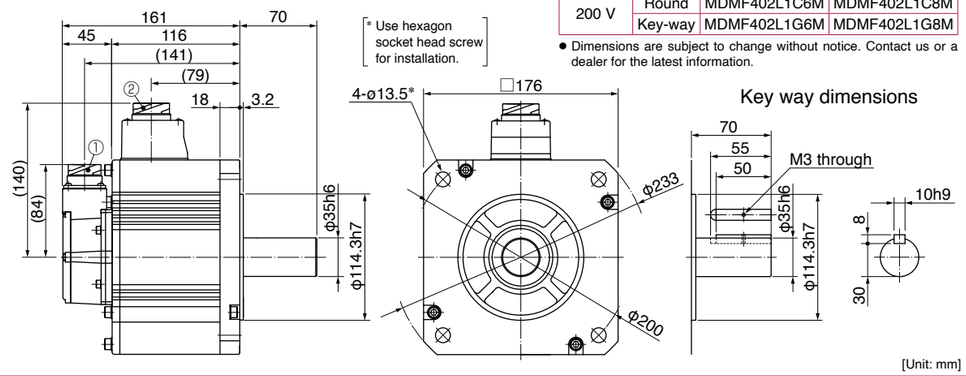

[Unit: mm]

Large size connector (JL10) type ・ with brake ・ with oil seal/ with protective lip ・ Key way shaft/ Round shaft

① Encoder connector (Large size JL10)
② Motor/Brake connector

Mass: 16.8 kg

● Motor model

Power supply	Shaft	with oil seal	with protective lip
200 V	Round	MDMF402L1D6M	MDMF402L1D8M
	Key-way	MDMF402L1H6M	MDMF402L1H8M

● Dimensions are subject to change without notice. Contact us or a dealer for the latest information.

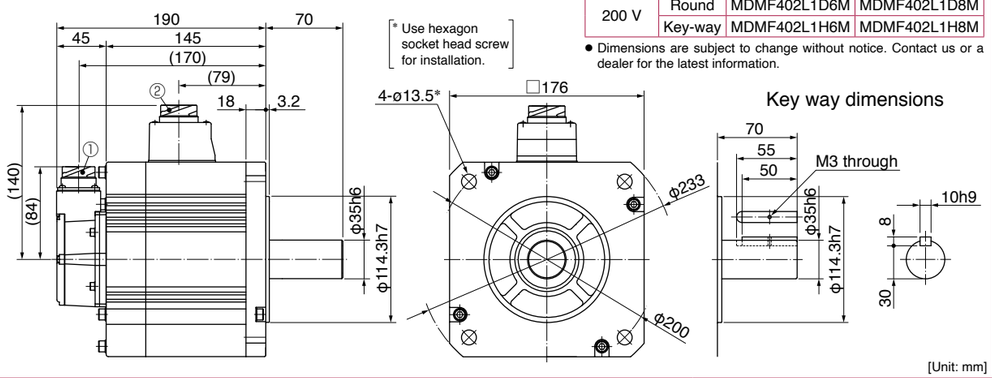

[Unit: mm]

* For motors specifications, refer to P.242, P.243.

Special Order Product

MDMF 5.0 kW to 7.5 kW

MDMF 5.0 kW

Large size connector (JL10) type ・ without brake ・ with oil seal/ with protective lip ・ Key way shaft/ Round shaft

① Encoder connector (Large size JL10)
② Motor connector

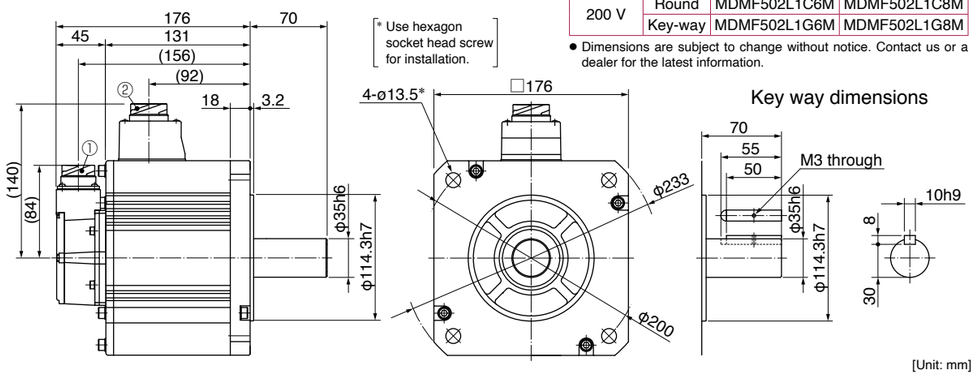

Mass: 15.6 kg

● Motor model

Power supply	Shaft	with oil seal	with protective lip
200 V	Round	MDMF502L1C6M	MDMF502L1C8M
	Key-way	MDMF502L1G6M	MDMF502L1G8M

● Dimensions are subject to change without notice. Contact us or a dealer for the latest information.

[Unit: mm]

Large size connector (JL10) type ・ with brake ・ with oil seal/ with protective lip ・ Key way shaft/ Round shaft

① Encoder connector (Large size JL10)
② Motor/Brake connector

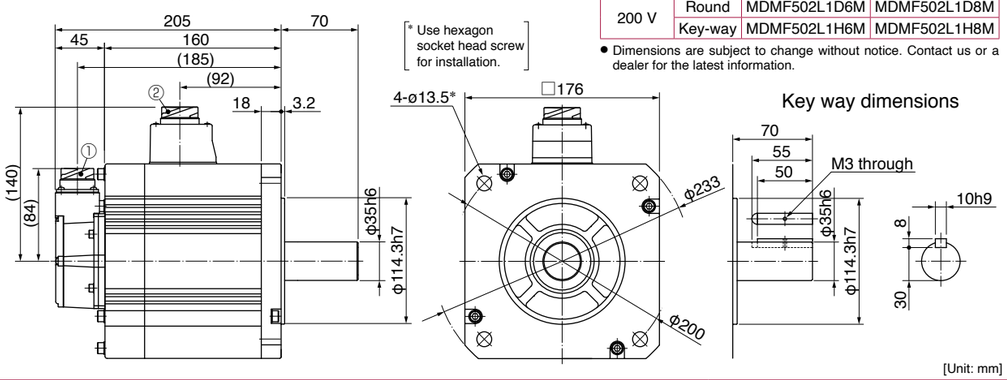

Mass: 19.0 kg

● Motor model

Power supply	Shaft	with oil seal	with protective lip
200 V	Round	MDMF502L1D6M	MDMF502L1D8M
	Key-way	MDMF502L1H6M	MDMF502L1H8M

● Dimensions are subject to change without notice. Contact us or a dealer for the latest information.

[Unit: mm]

MDMF 7.5 kW

Large size connector (JL10) type ・ without brake ・ with oil seal ・ Key way shaft/ Round shaft

① Encoder connector (Large size JL10)
② Motor connector

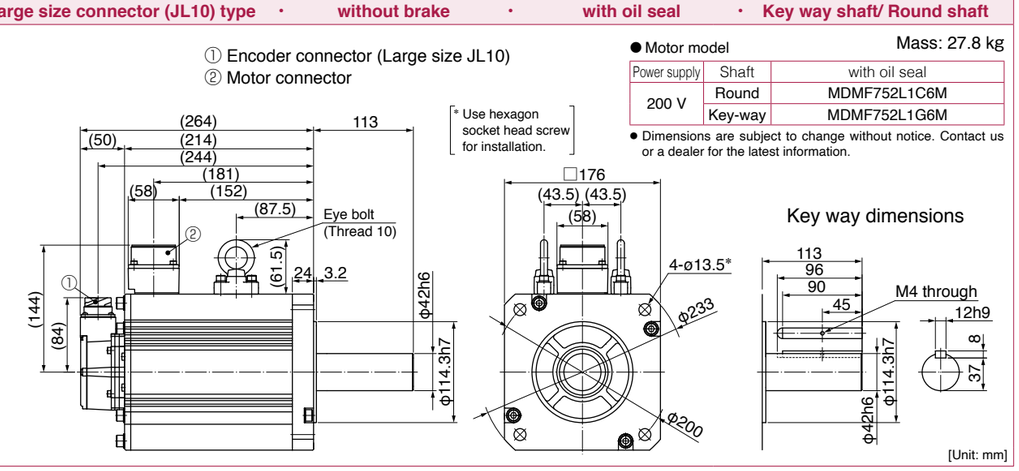

Mass: 27.8 kg

● Motor model

Power supply	Shaft	with oil seal
200 V	Round	MDMF752L1C6M
	Key-way	MDMF752L1G6M

● Dimensions are subject to change without notice. Contact us or a dealer for the latest information.

[Unit: mm]

* For motors specifications, refer to P.244, P.245.

MDMF 7.5 kW / MGMF 0.85 kW

MDMF 7.5 kW

Large size connector (JL10) type ・ with brake ・ with oil seal ・ Key way shaft/ Round shaft

① Encoder connector (Large size JL10)
② Motor connector ③ Brake connector

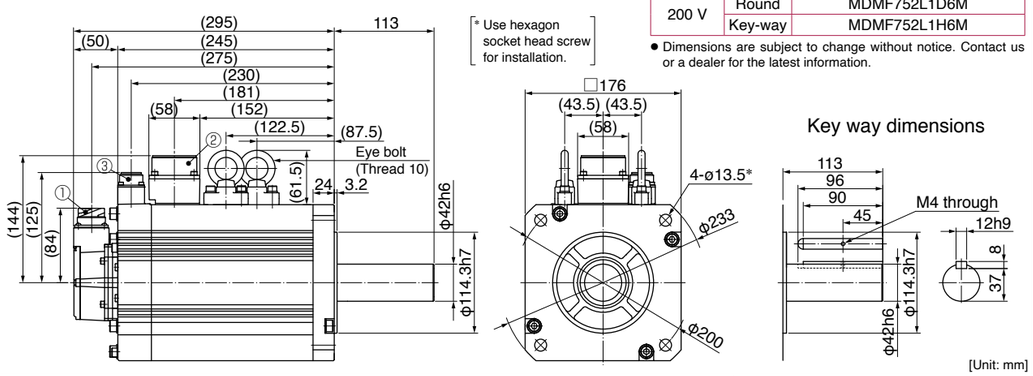

Mass: 31.9 kg

● Motor model

Power supply	Shaft	with oil seal
200 V	Round	MDMF752L1D6M
	Key-way	MDMF752L1H6M

● Dimensions are subject to change without notice. Contact us or a dealer for the latest information.

[Unit: mm]

MGMF 0.85 kW

Large size connector (JL10) type ・ without brake ・ with oil seal/ with protective lip ・ Key way shaft/ Round shaft

① Encoder connector (Large size JL10)
② Motor connector

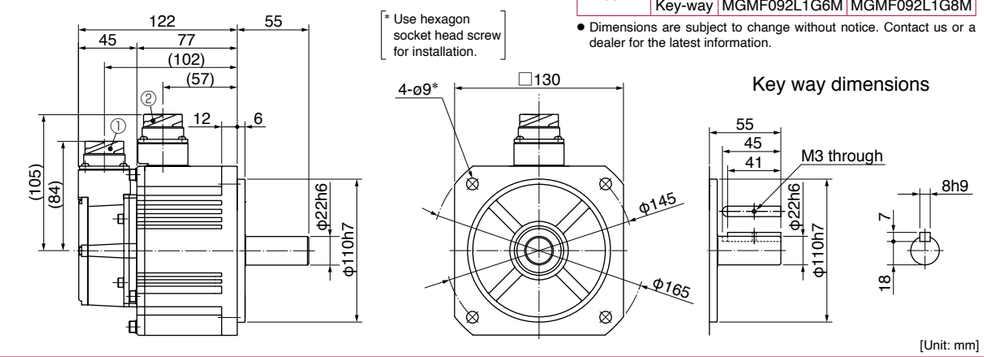

Mass: 4.6 kg

● Motor model

Power supply	Shaft	with oil seal	with protective lip
200 V	Round	MGMF092L1C6M	MGMF092L1C8M
	Key-way	MGMF092L1G6M	MGMF092L1G8M

● Dimensions are subject to change without notice. Contact us or a dealer for the latest information.

[Unit: mm]

Large size connector (JL10) type ・ with brake ・ with oil seal/ with protective lip ・ Key way shaft/ Round shaft

① Encoder connector (Large size JL10)
② Motor/Brake connector

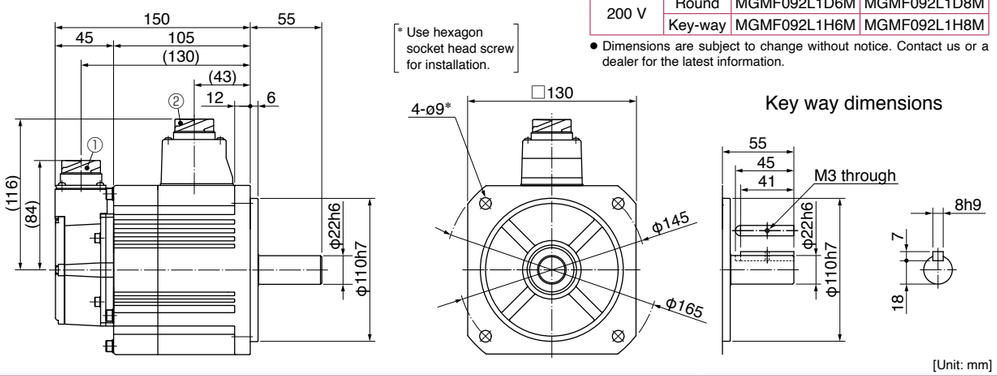

Mass: 6.1 kg

● Motor model

Power supply	Shaft	with oil seal	with protective lip
200 V	Round	MGMF092L1D6M	MGMF092L1D8M
	Key-way	MGMF092L1H6M	MGMF092L1H8M

● Dimensions are subject to change without notice. Contact us or a dealer for the latest information.

[Unit: mm]

* For motors specifications, refer to P.245, P.246.

Special Order Product

MGMF 1.3 kW to 1.8 kW

MGMF 1.3 kW

Large size connector (JL10) type ・ without brake ・ with oil seal/ with protective lip ・ Key way shaft/ Round shaft

① Encoder connector (Large size JL10)
② Motor connector

Mass: 5.7 kg

● Motor model

Power supply	Shaft	with oil seal	with protective lip
200 V	Round	MGMF132L1C6M	MGMF132L1C8M
	Key-way	MGMF132L1G6M	MGMF132L1G8M

● Dimensions are subject to change without notice. Contact us or a dealer for the latest information.

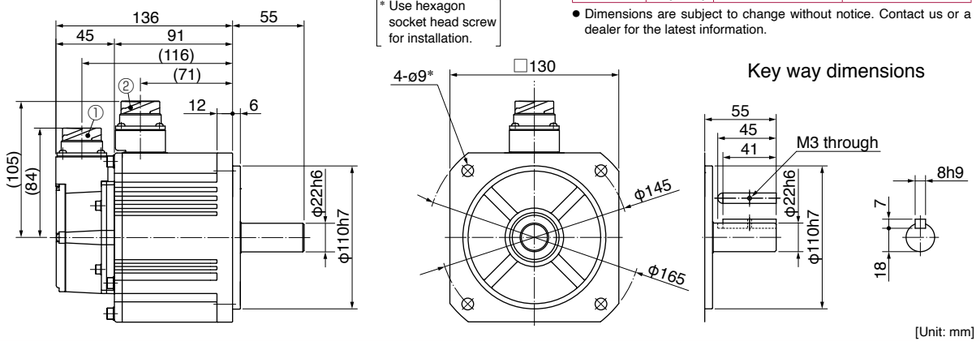

[Unit: mm]

Large size connector (JL10) type ・ with brake ・ with oil seal/ with protective lip ・ Key way shaft/ Round shaft

① Encoder connector (Large size JL10)
② Motor/Brake connector

Mass: 7.2 kg

● Motor model

Power supply	Shaft	with oil seal	with protective lip
200 V	Round	MGMF132L1D6M	MGMF132L1D8M
	Key-way	MGMF132L1H6M	MGMF132L1H8M

● Dimensions are subject to change without notice. Contact us or a dealer for the latest information.

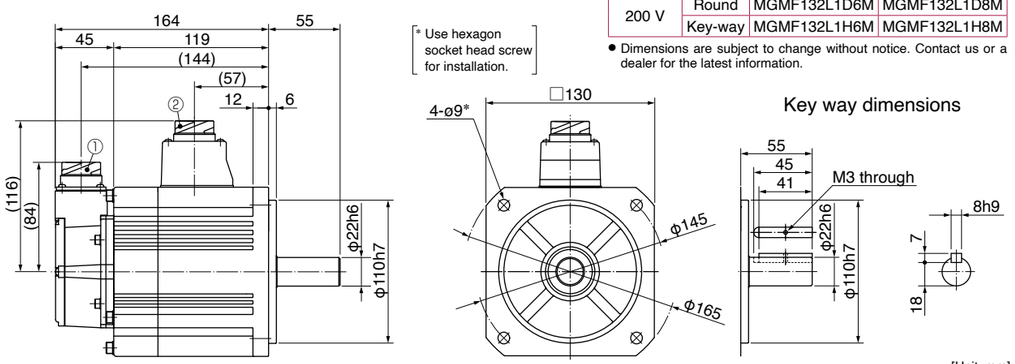

[Unit: mm]

MGMF 1.8 kW

Large size connector (JL10) type ・ without brake ・ with oil seal/ with protective lip ・ Key way shaft/ Round shaft

① Encoder connector (Large size JL10)
② Motor connector

Mass: 6.9 kg

● Motor model

Power supply	Shaft	with oil seal	with protective lip
200 V	Round	MGMF182L1C6M	MGMF182L1C8M
	Key-way	MGMF182L1G6M	MGMF182L1G8M

● Dimensions are subject to change without notice. Contact us or a dealer for the latest information.

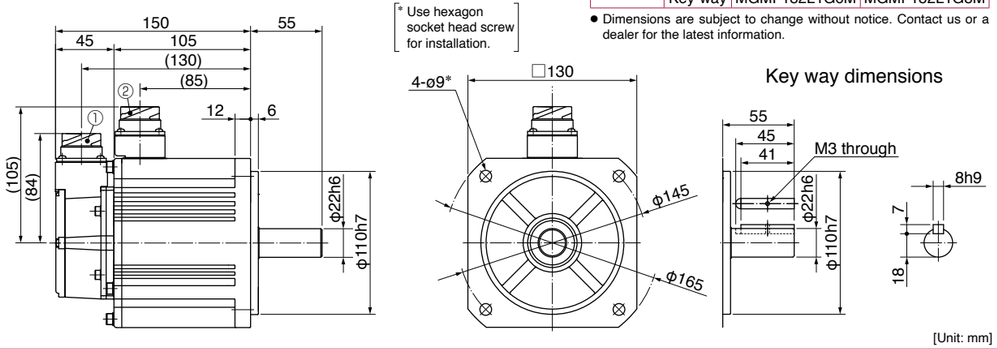

[Unit: mm]

* For motors specifications, refer to P.247, P.248.

Special Order Product

MGMF 1.8 kW to 2.4 kW

MGMF 1.8 kW

Large size connector (JL10) type ・ with brake ・ with oil seal/ with protective lip ・ Key way shaft/ Round shaft

① Encoder connector (Large size JL10)
② Motor/Brake connector

Mass: 8.4 kg

● Motor model

Power supply	Shaft	with oil seal	with protective lip
200 V	Round	MGMF182L1D6M	MGMF182L1D8M
	Key-way	MGMF182L1H6M	MGMF182L1H8M

● Dimensions are subject to change without notice. Contact us or a dealer for the latest information.

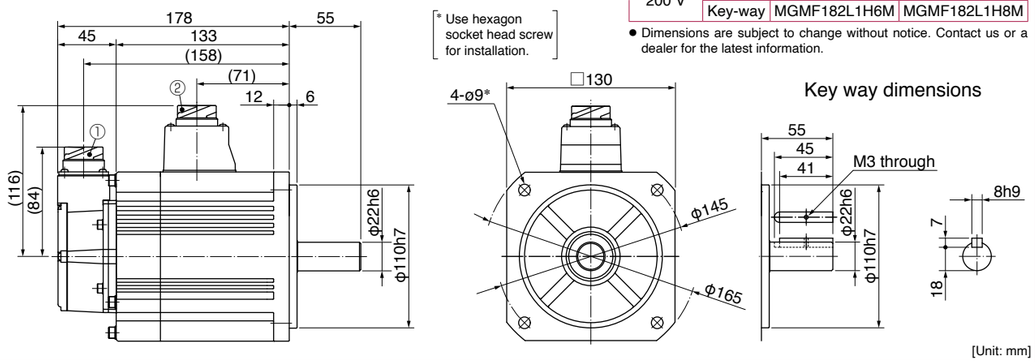

[Unit: mm]

MGMF 2.4 kW

Large size connector (JL10) type ・ without brake ・ with oil seal/ with protective lip ・ Key way shaft/ Round shaft

① Encoder connector (Large size JL10)
② Motor connector

Mass: 13.4 kg

● Motor model

Power supply	Shaft	with oil seal	with protective lip
200 V	Round	MGMF242L1C6M	MGMF242L1C8M
	Key-way	MGMF242L1G6M	MGMF242L1G8M

● Dimensions are subject to change without notice. Contact us or a dealer for the latest information.

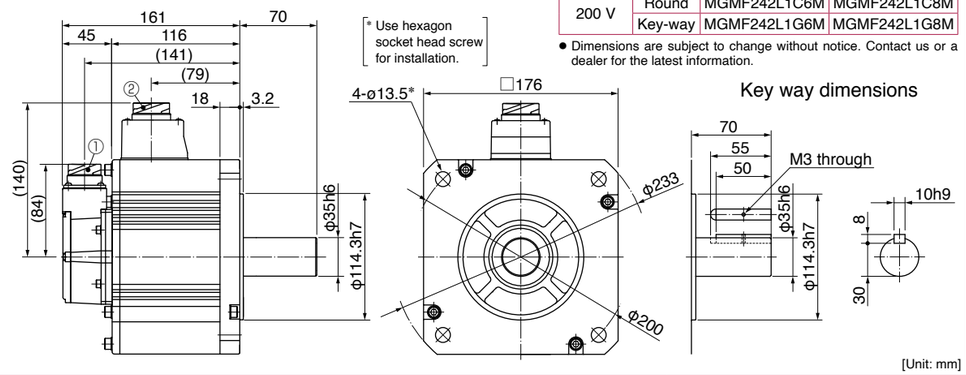

[Unit: mm]

Large size connector (JL10) type ・ with brake ・ with oil seal/ with protective lip ・ Key way shaft/ Round shaft

① Encoder connector (Large size JL10)
② Motor/Brake connector

Mass: 16.8 kg

● Motor model

Power supply	Shaft	with oil seal	with protective lip
200 V	Round	MGMF242L1D6M	MGMF242L1D8M
	Key-way	MGMF242L1H6M	MGMF242L1H8M

● Dimensions are subject to change without notice. Contact us or a dealer for the latest information.

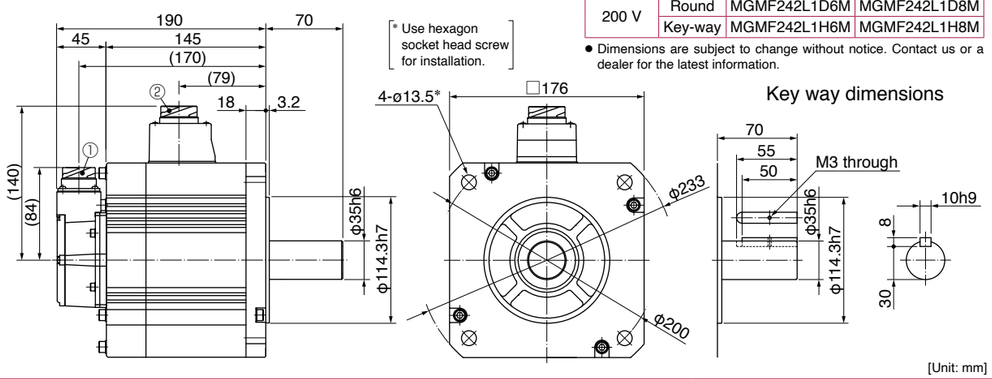

[Unit: mm]

* For motors specifications, refer to P.248, P.249.

Special Order Product

MGMF 2.9 kW to 4.4 kW

MGMF 2.9 kW

Large size connector (JL10) type · without brake · with oil seal/ with protective lip · Key way shaft/ Round shaft

① Encoder connector (Large size JL10)
② Motor connector

Mass: 13.4 kg

● Motor model

Power supply	Shaft	with oil seal	with protective lip
200 V	Round	MGMF292L1C6M	MGMF292L1C8M
	Key-way	MGMF292L1G6M	MGMF292L1G8M

● Dimensions are subject to change without notice. Contact us or a dealer for the latest information.

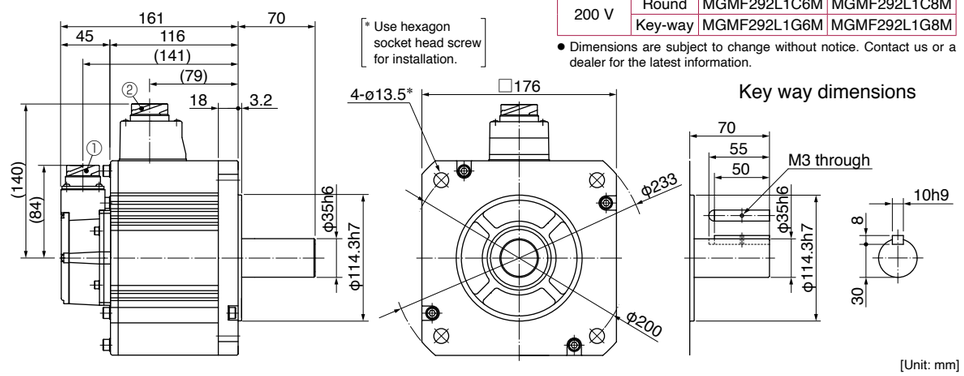

[Unit: mm]

Large size connector (JL10) type · with brake · with oil seal/ with protective lip · Key way shaft/ Round shaft

① Encoder connector (Large size JL10)
② Motor/Brake connector

Mass: 16.8 kg

● Motor model

Power supply	Shaft	with oil seal	with protective lip
200 V	Round	MGMF292L1D6M	MGMF292L1D8M
	Key-way	MGMF292L1H6M	MGMF292L1H8M

● Dimensions are subject to change without notice. Contact us or a dealer for the latest information.

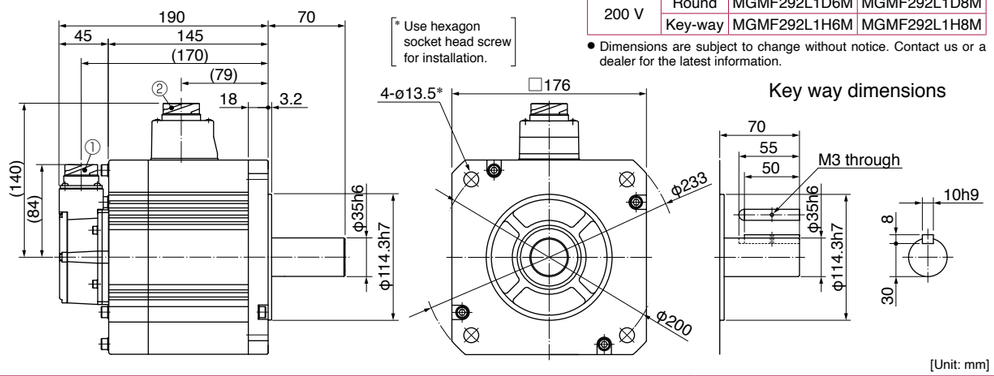

[Unit: mm]

MGMF 4.4 kW

Large size connector (JL10) type · without brake · with oil seal/ with protective lip · Key way shaft/ Round shaft

① Encoder connector (Large size JL10)
② Motor connector

Mass: 15.6 kg

● Motor model

Power supply	Shaft	with oil seal	with protective lip
200 V	Round	MGMF442L1C6M	MGMF442L1C8M
	Key-way	MGMF442L1G6M	MGMF442L1G8M

● Dimensions are subject to change without notice. Contact us or a dealer for the latest information.

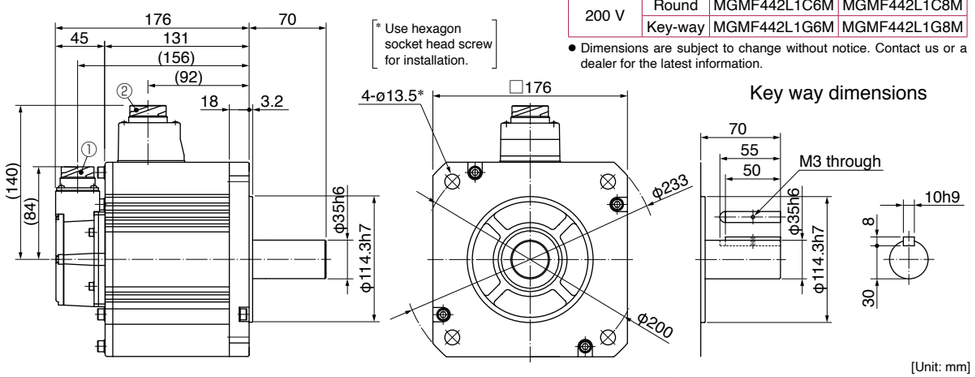

[Unit: mm]

* For motors specifications, refer to P.250, P.251.

Special Order Product

MGMF 4.4 kW to 5.5 kW

MGMF 4.4 kW

Large size connector (JL10) type · with brake · with oil seal/ with protective lip · Key way shaft/ Round shaft

① Encoder connector (Large size JL10)
② Motor/Brake connector

Mass: 19.0 kg

● Motor model

Power supply	Shaft	with oil seal	with protective lip
200 V	Round	MGMF442L1D6M	MGMF442L1D8M
	Key-way	MGMF442L1H6M	MGMF442L1H8M

● Dimensions are subject to change without notice. Contact us or a dealer for the latest information.

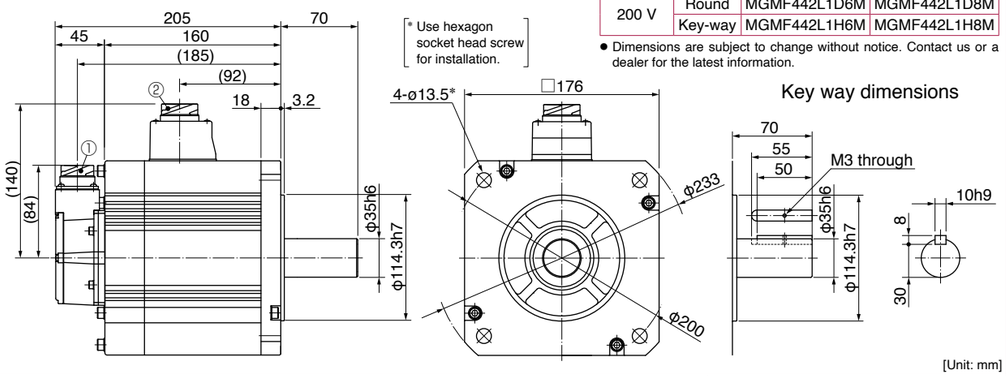

[Unit: mm]

MGMF 5.5 kW

Large size connector (JL10) type · without brake · with oil seal · Key way shaft/ Round shaft

① Encoder connector (Large size JL10)
② Motor connector

Mass: 21.3 kg

● Motor model

Power supply	Shaft	with oil seal
200 V	Round	MGMF552L1C6M
	Key-way	MGMF552L1G6M

● Dimensions are subject to change without notice. Contact us or a dealer for the latest information.

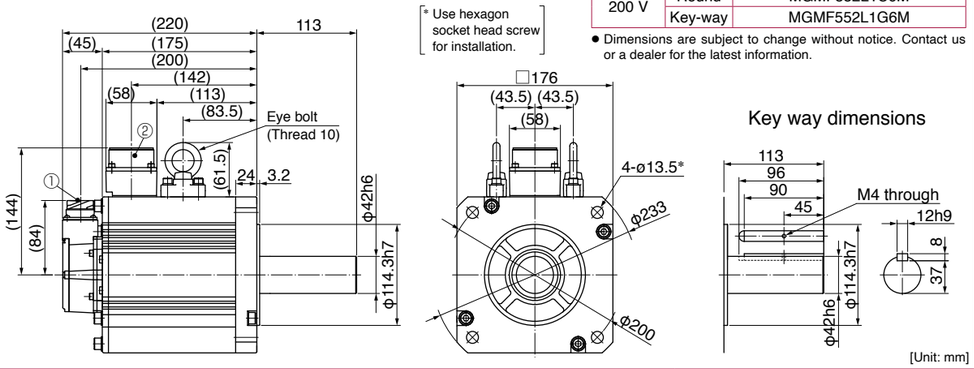

[Unit: mm]

Large size connector (JL10) type · with brake · with oil seal · Key way shaft/ Round shaft

① Encoder connector (Large size JL10)
② Motor connector ③ Brake connector

Mass: 25.4 kg

● Motor model

Power supply	Shaft	with oil seal
200 V	Round	MGMF552L1D6M
	Key-way	MGMF552L1H6M

● Dimensions are subject to change without notice. Contact us or a dealer for the latest information.

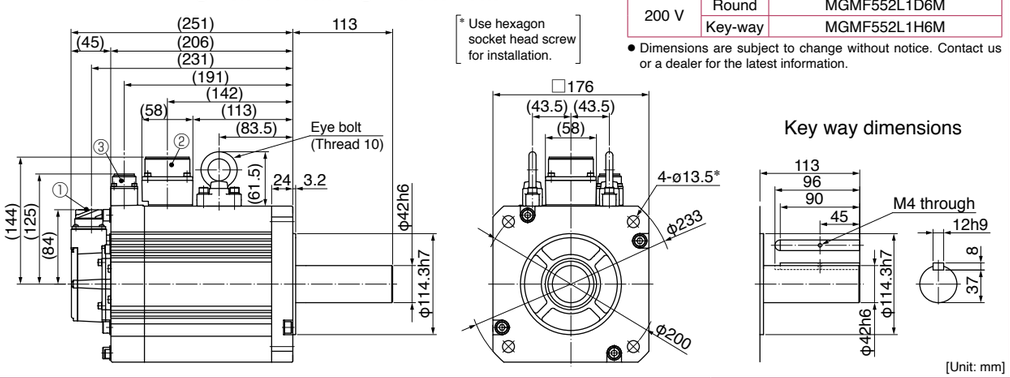

[Unit: mm]

* For motors specifications, refer to P.251, P.252.

Motor Types with Gear Reducer



MQMF
100 W to 400 W



MHMF
100 W to 750 W

Reduction ratio	Motor output (W)				Type of reducer
	100	200	400	750	
1/5	●	●	●	●	For high precision
1/9	●	●	●	●	
1/15	●	●	●	●	
1/25	●	●	●	●	

*** MQMF 750 W is not prepared.**
*** MHMF 100 W 1/25, 400 W 1/25 are not prepared.**

Efficiency of the gear reducer show the following inclination in relation to output torque and rotational speed.

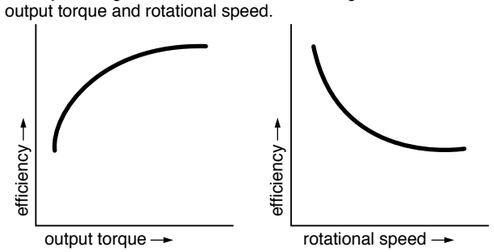

Specifications of Motor with Gear Reducer

Items		Specifications
Gear reducer	Backlash	3 minutes or smaller (initial value) at output shaft of the reducer
	Composition of gear	Planetary gear
	Gear efficiency	76 % to 87 %
	Lubrication	Grease lubrication
	Rotational direction at output shaft	Same direction as the motor output shaft
	Mounting method	Flange mounting
	Permissible moment of inertia of the load (conversion to the motor shaft)	10 times or smaller than rotor moment of inertia of the motor
	Enclosure rating	IP44 (at gear reducer)
Environment	Ambient temperature	0 °C to 40 °C (free from freezing)
	Storage temperature	–20 °C to 65 °C (Max.temperature guarantee: 80 °C for 72 hours free from condensation)
	Ambient humidity, Storage humidity	20 %RH to 85 %RH (free from condensation)
	Vibration	Lower than 49 m/s^2 (5G) at runninng, 24.5 m/s^2 (2.5G) at stall
	Impact	Lower than 98 m/s^2 (10G)
	Altitude	Lower than 1000 m

* For combination of elements of model number, refer to Index P.448.

Model Designation

M	Q	M	F	0	1	1	L	3	1	N

N: Standard

Symbol	Type
MQMF	Middle inertia Flat type 100 W to 400 W
MHMF	High inertia 100 W to 750 W

Symbol	Series
F	A6 Family

Motor rated output

Symbol	Specifications
01	100 W
02	200 W
04	400 W
08	750 W

Voltage specifications

Symbol	Rated output
1	100 V
2	200 V

Motor types with gear reducer

Symbol	Reduction ratio	Motor output (W)				Type of reducer
		100	200	400	750	
1N	1/5	●	●	●	●	For high precision
2N	1/9	●	●	●	●	
3N	1/15	●	●	●	●	
4N	1/25	●	●	●	●	

*** MQMF 750 W is not prepared.**
*** MHMF 100 W 1/25, 400 W 1/25 are not prepared.**

Rotary encoder specifications

Symbol	Format	Pulse counts	Resolution	Wire
L	Absolute	23-bit	8388608	7

<Note>
When using it as an incremental system (not using multi-turn data), do not connect the battery for absolute encoder.

Motor structure

Symbol	Motor I/F	Shaft	Holding brake	
		Key way	without	with
3	Connector	●	●	
4		●		●
7	Leadwire	●	●	
8		●		●

The Combination of the Driver and the Motor

Motor				Driver	
				A6SF series	A6SE series
Motor series	Power supply	Output (W)	Part No.*	Multi fanction type	Basic type
				Pulse, analog, full-closed	Pulse signal input (Incremental only)
MQMF Middle inertia Flat type	Single phase 100 V	100	MQMF011L □□ N	MADLT11SF	MADLN11SE
		200	MQMF021L □□ N	MBDLT21SF	MBDLN21SE
		400	MQMF041L □□ N	MCDLT31SF	MCDLN31SE
	Single phase/ 3-phase 200 V	100	MQMF012L □□ N	MADLT05SF	MADLN05SE
		200	MQMF022L □□ N	MADLT15SF	MADLN15SE
		400	MQMF042L □□ N	MBDLT25SF	MBDLN25SE
MHMF High inertia	Single phase 100 V	100	MHMF011L □□ N	MADLT11SF	MADLN11SE
		200	MHMF021L □□ N	MBDLT21SF	MBDLN21SE
		400	MHMF041L □□ N	MCDLT31SF	MCDLN31SE
	Single phase/ 3-phase 200 V	100	MHMF012L □□ N	MADLT05SF	MADLN05SE
		200	MHMF022L □□ N	MADLT15SF	MADLN15SE
		400	MHMF042L □□ N	MBDLT25SF	MBDLN25SE
		750	MHMF082L □□ N	MCDLT35SF	MCDLN35SE

* The symbols of the motor structure and the gear reduction ratio are entered in □□ of the motor part number. Please refer to the above “Model Designation”.
* Motor options: Please check the upper 9th digit of the motor part number. If the motor is connector type, refer to P.31 to P.32. And if the motor is leadwire type, refer to P.29 to P.30.

Table of Motor Specifications

	Part No.*	Motor Output	Reduction ratio	Output	Rated speed	Max. speed	Rated torque	Peak max. torque	Moment of inertia (motor + reducer/ converted to motor shaft)		Mass		Permissible radial load	Permissible thrust load
									w/o brake	w/ brake	w/o brake	w/ brake		
		(W)		(W)	(r/min)	(r/min)	(N·m)	(N·m)	J(×10⁻⁴kg·m²)		(kg)		(N)	(N)
MQMF Middle inertiaa Flat type	MQMF01□L□1N	100	1/5	85	600	1300	1.36	5.01	0.210	0.240	1.2	1.4	490	245
	MQMF01□L□2N		1/9	85	333	722	2.45	9.02	0.200	0.230	1.2	1.4	588	294
	MQMF01□L□3N		1/15	81	200	433	3.89	14.4	0.207	0.237	1.4	1.7	784	392
	MQMF01□L□4N		1/25	76	120	260	6.08	22.5	0.287	0.317	2.6	2.9	1670	833
	MQMF02□L□1N	200	1/5	175	600	1300	2.78	10.2	0.650	0.740	1.9	2.3	490	245
	MQMF02□L□2N		1/9	157	333	722	4.49	16.6	0.770	0.860	3.0	3.4	1180	588
	MQMF02□L□3N		1/15	163	200	433	7.78	28.7	0.800	0.890	3.4	3.8	1470	735
	MQMF02□L□4N		1/25	163	120	260	13.0	47.9	0.790	0.880	3.4	3.8	1670	833
	MQMF04□L□1N	400	1/5	331	600	1300	5.27	19.6	1.35	1.43	3.4	3.9	980	490
	MQMF04□L□2N		1/9	331	333	722	9.49	35.3	1.25	1.33	3.4	3.9	1180	588
	MQMF04□L□3N		1/15	335	200	433	16.0	59.4	1.28	1.36	3.8	4.3	1470	735
	MQMF04□L□4N		1/25	327	120	260	26.0	96.9	1.31	1.39	5.4	5.9	2060	1030
MHMF High inertia	MHMF01□L□1N	100	1/5	85	600	1300	1.36	5.01	0.131	0.134	1.0	1.2	490	245
	MHMF01□L□2N		1/9	85	333	722	2.45	9.02	0.121	0.124	1.0	1.2	588	294
	MHMF01□L□3N		1/15	81	200	433	3.89	14.4	0.124	0.127	1.1	1.3	784	392
	MHMF02□L□1N	200	1/5	175	600	1300	2.78	10.2	0.437	0.457	1.5	1.8	490	245
	MHMF02□L□2N		1/9	157	333	722	4.49	16.6	0.563	0.583	2.5	2.8	1180	588
	MHMF02□L□3N		1/15	163	200	433	7.78	28.7	0.592	0.612	2.9	3.2	1470	735
	MHMF02□L□4N		1/25	163	120	260	13.0	47.9	0.583	0.603	2.9	3.2	1670	833
	MHMF04□L□1N	400	1/5	339	600	1300	5.39	19.6	0.930	0.950	2.8	3.2	980	490
	MHMF04□L□2N		1/9	332	333	722	9.51	35.3	0.833	0.853	2.8	3.2	1180	588
	MHMF04□L□3N		1/15	335	200	433	16.0	59.4	0.862	0.882	3.2	3.6	1470	735
	MHMF082L□1N	750	1/5	672	600	1200	10.7	38.4	2.38	2.48	4.3	5.0	980	490
	MHMF082L□2N		1/9	645	333	667	18.5	68.4	2.32	2.42	5.6	6.3	1470	735
	MHMF082L□3N		1/15	637	200	400	30.4	111	2.25	2.35	6.0	6.7	1760	882
	MHMF082L□4N		1/25	637	120	240	50.7	186	2.22	2.32	6.0	6.7	2060	1030

* The symbols of the voltage specifications and the motor structure are entered in □ of the motor part number.
Please refer to “Model Designation” in P.294.

MQMF series (100 W to 400 W)

Supply voltage to driver	Motor output \ Reduction ratio	1/5	1/9	1/15	1/25
100 V	100 W	MQMF011L□1N	MQMF011L□2N	MQMF011L□3N	MQMF011L□4N
	200 W	MQMF021L□1N	MQMF021L□2N	MQMF021L□3N	MQMF021L□4N
	400 W	MQMF041L□1N	MQMF041L□2N	MQMF041L□3N	MQMF041L□4N
200 V	100 W	MQMF012L□1N	MQMF012L□2N	MQMF012L□3N	MQMF012L□4N
	200 W	MQMF022L□1N	MQMF022L□2N	MQMF022L□3N	MQMF022L□4N
	400 W	MQMF042L□1N	MQMF042L□2N	MQMF042L□3N	MQMF042L□4N

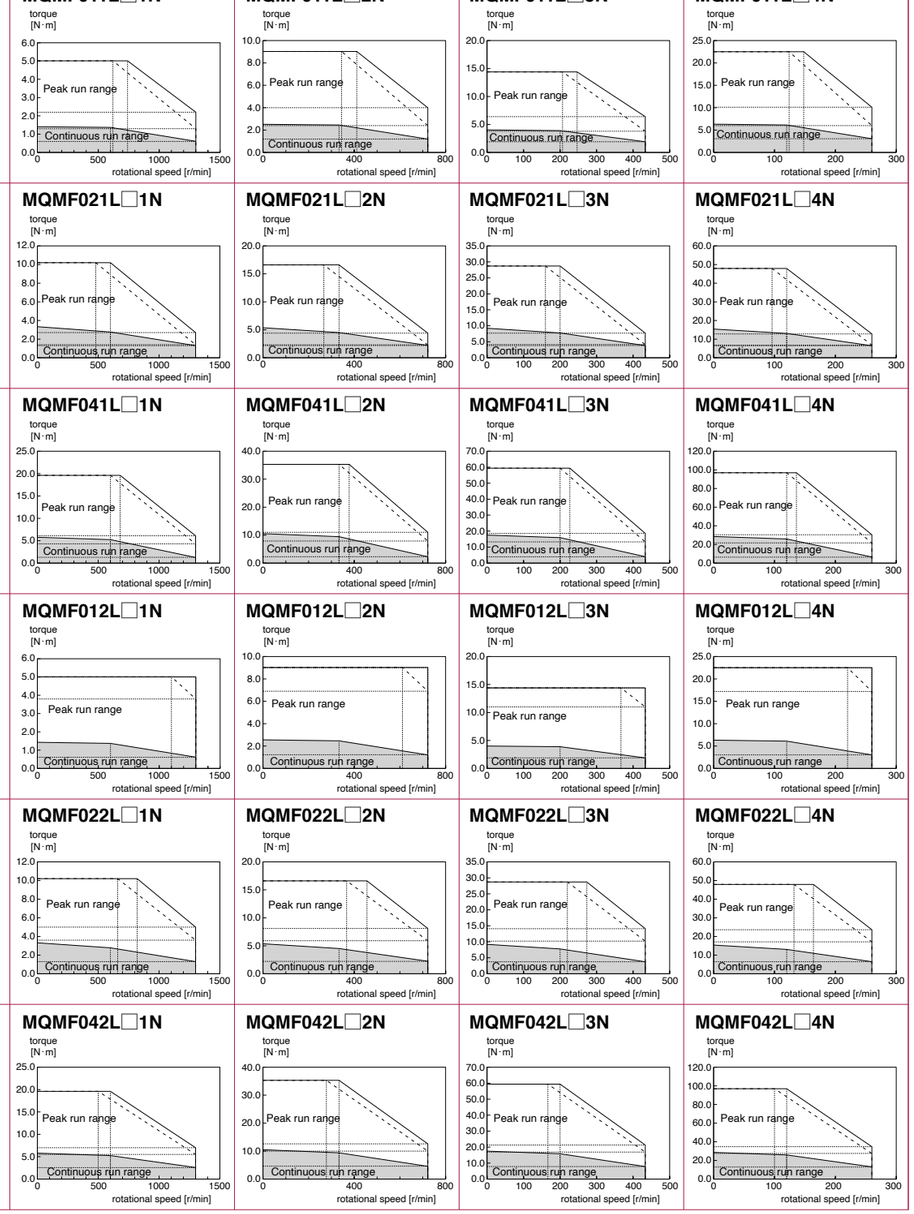

Dotted line represents the torque at 10 % less supply voltage to driver.

* The symbols of the motor structure are entered in □ of the motor part number. Please refer to “Model Designation” in P.294.

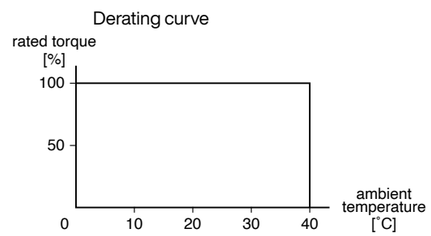

MHMF series (100 W to 750 W)

Supply voltage to driver	Motor output \ Reduction ratio	1/5	1/9	1/15	1/25
100 V	100 W	MHMF011L□1N *1	MHMF011L□2N *1	MHMF011L□3N *1	
	200 W	MHMF021L□1N	MHMF021L□2N	MHMF021L□3N	MHMF021L□4N
	400 W	MHMF041L□1N *2	MHMF041L□2N *2	MHMF041L□3N *2	

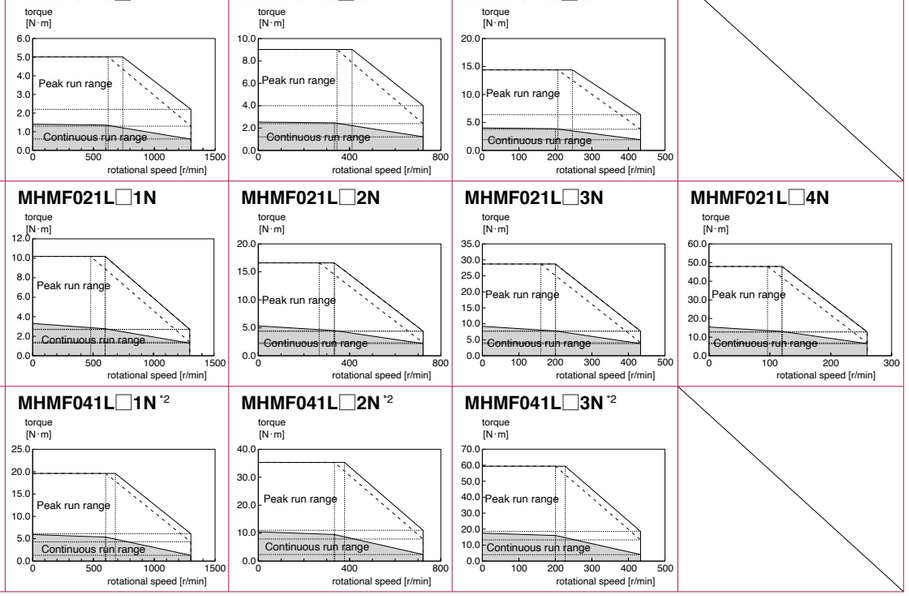

Dotted line represents the torque at 10 % less supply voltage to driver.

* The symbols of the motor structure are entered in □ of the motor part number. Please refer to “Model Designation” in P.294.

*1 Derating curve

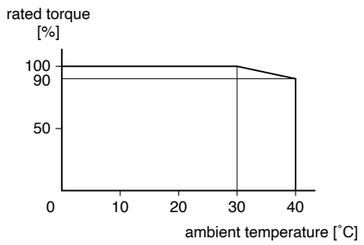

*2 Derating curve

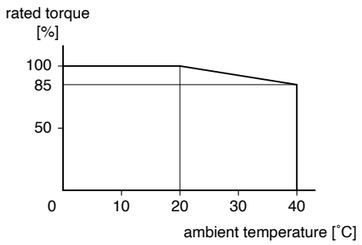

Motor number without *1, *2 Derating curve

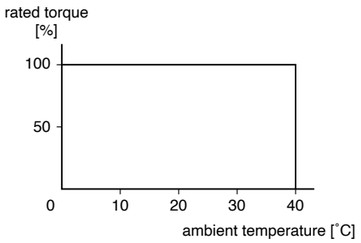

Supply voltage to driver	Motor output \ Reduction ratio	1/5	1/9	1/15	1/25
200 V	100 W	MHMF012L□1N *1	MHMF012L□2N *1	MHMF012L□3N *1	
	200 W	MHMF022L□1N	MHMF022L□2N	MHMF022L□3N	MHMF022L□4N
	400 W	MHMF042L□1N *2	MHMF042L□2N *2	MHMF042L□3N *2	
	750 W	MHMF082L□1N	MHMF082L□2N	MHMF082L□3N *3	MHMF082L□4N *3

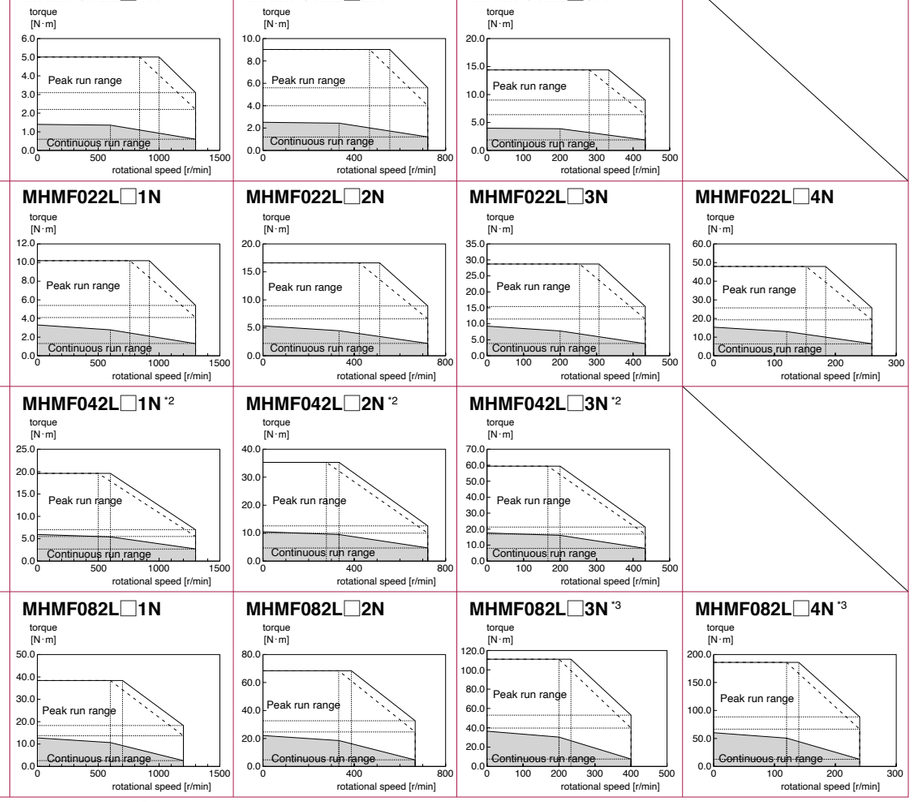

Dotted line represents the torque at 10 % less supply voltage to driver.

* The symbols of the motor structure are entered in □ of the motor part number. Please refer to “Model Designation” in P.294.

*1 Derating curve

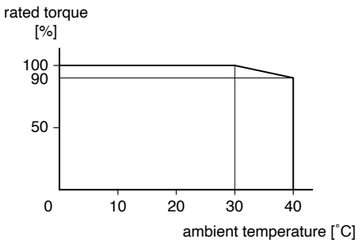

*2 Derating curve

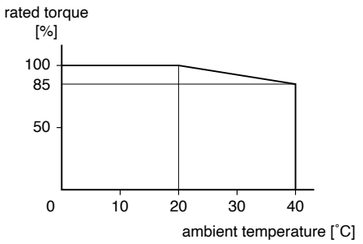

*3 Derating curve

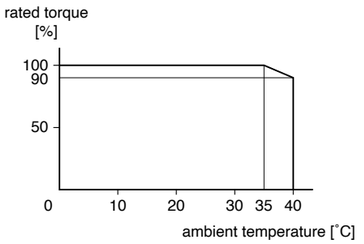

Motor number without *1, *2, *3 Derating curve

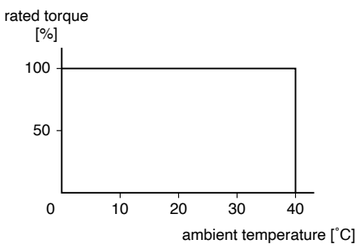

MQMF series (Leadwire type)

■without Brake

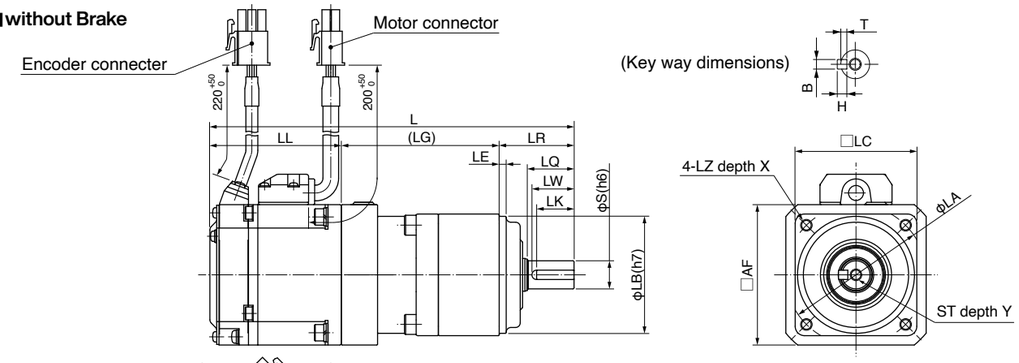

(Key way dimensions)

■with Brake

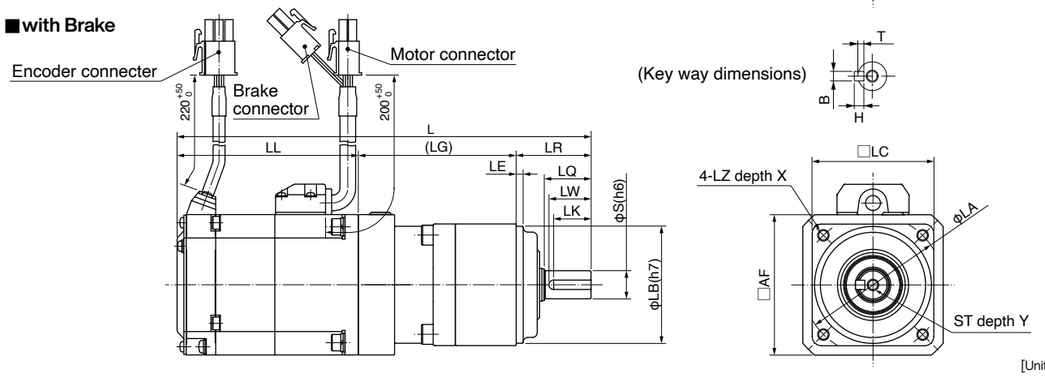

(Key way dimensions)

[Unit: mm]

Motor Part No.*1	Motor output (W)	Reduction ratio	L (without Brake / with Brake)	LL (without Brake / with Brake)	(LG)	LR	LQ	LW	LK	S	B×T	H	ST	Y	LB	LA	LE	LZ	LC *2	X	AF *2
MQMF01□L□1N	100	1/5	155.7 / 177	56.2 / 77.5	67.5	32	20	18	16	12	4×2.5	4	M5	10	50	60	3	M5	52	12	60
MQMF01□L□2N		1/9	155.7 / 177	56.2 / 77.5																	
MQMF01□L□3N		1/15	171.7 / 193	56.2 / 77.5	83.5																
MQMF01□L□4N		1/25	199.7 / 221	56.2 / 77.5	93.5	50	30	26	22	19	6×3.5	6	M6	12	70	90		M6	78	20	
MQMF02□L□1N	200	1/5	166.8 / 190.4	62.3 / 85.9	72.5	32	20	18	16	12	4×2.5	4	M5	10	50	60	3	M5	52	12	80
MQMF02□L□2N		1/9	201.8 / 225.4	62.3 / 85.9	89.5	50	30	26	22	19	6×3.5	6	M6	12	70	90		M6	78	20	
MQMF02□L□3N		1/15	212.3 / 235.9	62.3 / 85.9	100																
MQMF02□L□4N		1/25	212.3 / 235.9	62.3 / 85.9																	
MQMF04□L□1N	400	1/5	214.3 / 237.9	74.8 / 98.4	89.5	50	30	26	22	19	6×3.5	6	M6	12	70	90	3	M6	78	20	80
MQMF04□L□2N		1/9	214.3 / 237.9	74.8 / 98.4																	
MQMF04□L□3N		1/15	224.8 / 248.4	74.8 / 98.4	100																
MQMF04□L□4N		1/25	239.8 / 263.4	74.8 / 98.4	104	61	40	35	30	24	8×4	7	M8	16	90	115	5	M8	98		

*1 The symbols of the voltage specifications and the motor structure are entered in □ of the motor part number.
Please refer to “Model Designation” in P.294.
*2 □LC: flange size of the reduction gear □, AF: □ flange size of the motor

MQMF series (Connector type)

■without Brake

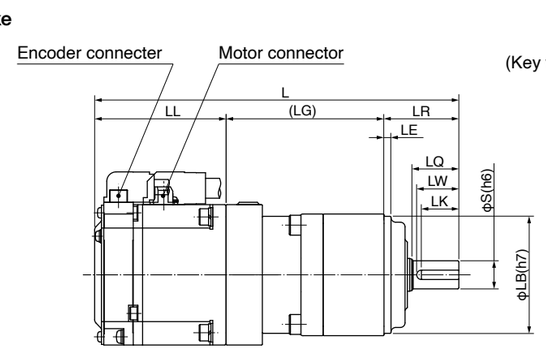

(Key way dimensions)

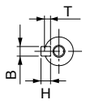

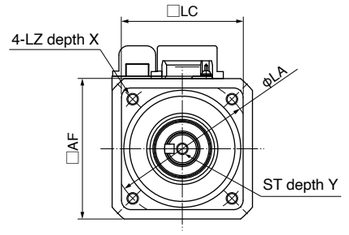

■with Brake

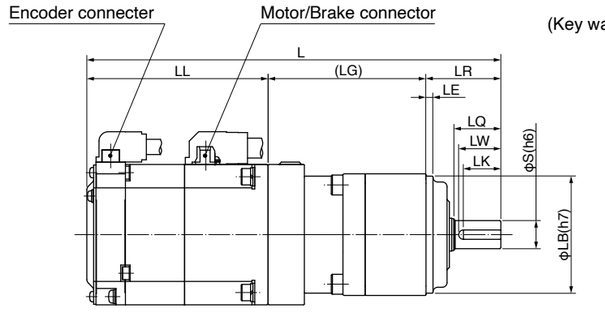

(Key way dimensions)

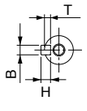

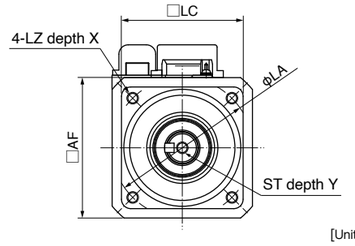

[Unit: mm]

Motor Part No.*1	Motor output (W)	Reduction ratio	L (without Brake / with Brake)	LL (without Brake / with Brake)	(LG)	LR	LQ	LW	LK	S	B×T	H	ST	Y	LB	LA	LE	LZ	LC *2	X	AF *2
MQMF01□L□1N	100	1/5	155.7 / 177	56.2 / 77.5	67.5	32	20	18	16	12	4×2.5	4	M5	10	50	60	3	M5	52	12	60
MQMF01□L□2N		1/9	155.7 / 177	56.2 / 77.5																	
MQMF01□L□3N		1/15	171.7 / 193	56.2 / 77.5	83.5																
MQMF01□L□4N		1/25	199.7 / 221	56.2 / 77.5	93.5	50	30	26	22	19	6×3.5	6	M6	12	70	90		M6	78	20	
MQMF02□L□1N	200	1/5	166.8 / 190.4	62.3 / 85.9	72.5	32	20	18	16	12	4×2.5	4	M5	10	50	60	3	M5	52	12	80
MQMF02□L□2N		1/9	201.8 / 225.4	62.3 / 85.9	89.5	50	30	26	22	19	6×3.5	6	M6	12	70	90		M6	78	20	
MQMF02□L□3N		1/15	212.3 / 235.9	62.3 / 85.9	100																
MQMF02□L□4N		1/25	212.3 / 235.9	62.3 / 85.9																	
MQMF04□L□1N	400	1/5	214.3 / 237.9	74.8 / 98.4	89.5	50	30	26	22	19	6×3.5	6	M6	12	70	90	3	M6	78	20	80
MQMF04□L□2N		1/9	214.3 / 237.9	74.8 / 98.4																	
MQMF04□L□3N		1/15	224.8 / 248.4	74.8 / 98.4	100																
MQMF04□L□4N		1/25	239.8 / 263.4	74.8 / 98.4	104	61	40	35	30	24	8×4	7	M8	16	90	115	5	M8	98		

*1 The symbols of the voltage specifications and the motor structure are entered in □ of the motor part number.
Please refer to “Model Designation” in P.294.
*2 □LC: flange size of the reduction gear □, AF: □ flange size of the motor

MHMF series (Leadwire type)

■without Brake

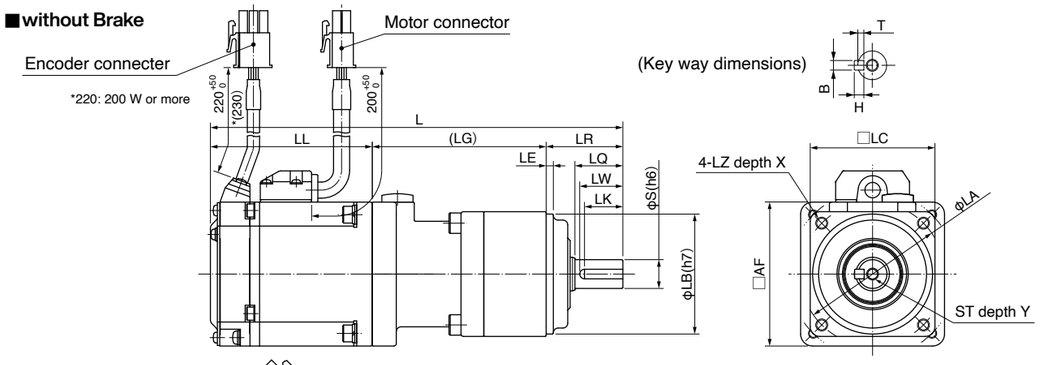

■with Brake

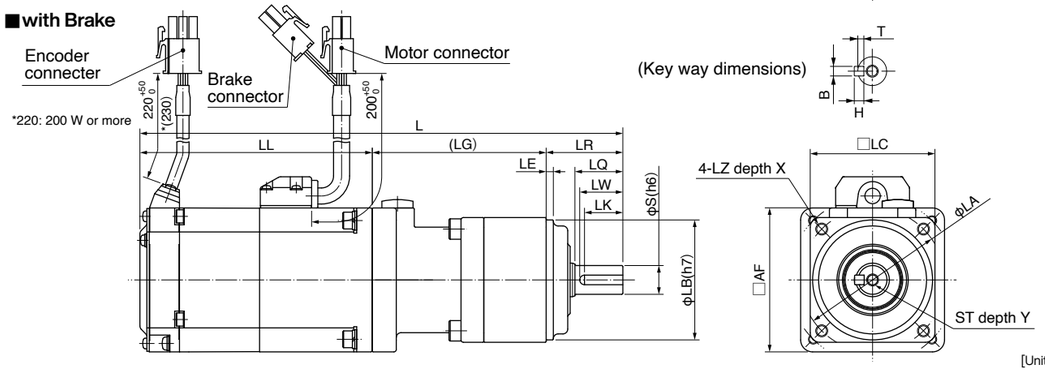

[Unit: mm]

Motor Part No.*1	Motor output (W)	Reduction ratio	L without Brake	L with Brake	LL without Brake	LL with Brake	(LG)	LR	LQ	LW	LK	S	B×T	H	ST	Y	LB	LA	LE	LZ	LC *2	X	AF *2
MHMF01□L□1N	100	1/5	167	200.9	67.5	101.4	67.5	32	20	18	16	12	4×2.5	4	M5	10	50	60	3	M5	52	12	40
MHMF01□L□2N		1/9	167	200.9	67.5	101.4																	
MHMF01□L□3N		1/15	177.5	211.4	67.5	101.4	78																
MHMF02□L□1N	200	1/5	172	201.3	67.5	96.8	72.5	32	20	18	16	12	4×2.5	4	M5	10	50	60	3	M5	52	12	60
MHMF02□L□2N		1/9	207	236.3	67.5	96.8	89.5	50	30	26	22	19	6×3.5	6	M6	12	70	90		M6	78	20	
MHMF02□L□3N		1/15	217.5	246.8	67.5	96.8	100																
MHMF02□L□4N		1/25	217.5	246.8	67.5	96.8																	
MHMF04□L□1N	400	1/5	224	253.3	84.5	113.8	89.5	50	30	26	22	19	6×3.5	6	M6	12	70	90	3	M6	78	20	60
MHMF04□L□2N		1/9	224	253.3	84.5	113.8																	
MHMF04□L□3N		1/15	234.5	263.8	84.5	113.8	100																
MHMF082L□1N	750	1/5	235.4	269	91.9	125.5	93.5	50	30	26	22	19	6×3.5	6	M6	12	70	90	3	M6	78	20	80
MHMF082L□2N		1/9	250.4	284	91.9	125.5	97.5	61	40	35	30	24	8×4	7	M8	16	90	115	5	M8	98		
MHMF082L□3N		1/15	262.9	296.5	91.9	125.5	110																
MHMF082L□4N		1/25	262.9	296.5	91.9	125.5																	

*1 The symbols of the voltage specifications and the motor structure are entered in □ of the motor part number.
Please refer to “Model Designation” in P.294.
*2 □LC: flange size of the reduction gear □, AF: □ flange size of the motor

MHMF series (Connector type)

■without Brake

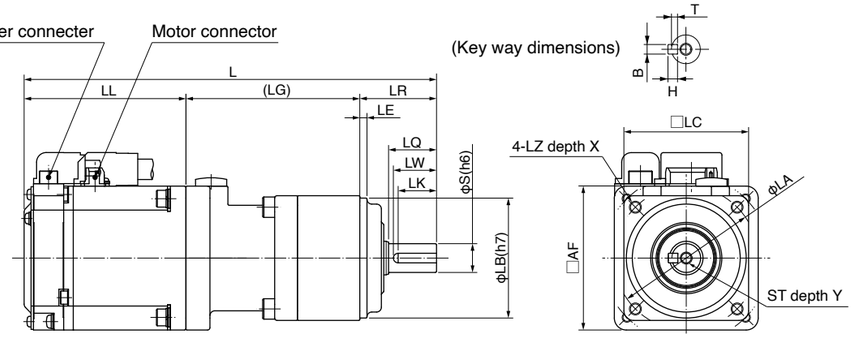

■with Brake

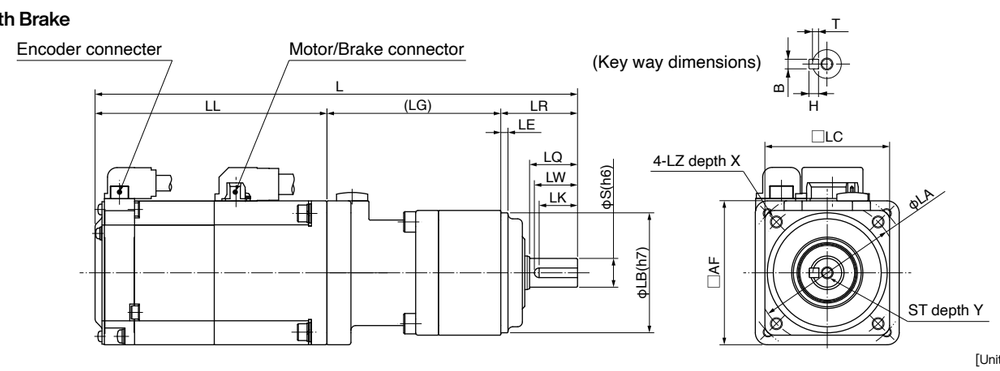

[Unit: mm]

Motor Part No.*1	Motor output (W)	Reduction ratio	L without Brake	L with Brake	LL without Brake	LL with Brake	(LG)	LR	LQ	LW	LK	S	B×T	H	ST	Y	LB	LA	LE	LZ	LC *2	X	AF *2
MHMF01□L□1N	100	1/5	167	200.9	67.5	101.4	67.5	32	20	18	16	12	4×2.5	4	M5	10	50	60	3	M5	52	12	40
MHMF01□L□2N		1/9	167	200.9	67.5	101.4																	
MHMF01□L□3N		1/15	177.5	211.4	67.5	101.4	78																
MHMF02□L□1N	200	1/5	172	201.3	67.5	96.8	72.5	32	20	18	16	12	4×2.5	4	M5	10	50	60	3	M5	52	12	60
MHMF02□L□2N		1/9	207	236.3	67.5	96.8	89.5	50	30	26	22	19	6×3.5	6	M6	12	70	90		M6	78	20	
MHMF02□L□3N		1/15	217.5	246.8	67.5	96.8	100																
MHMF02□L□4N		1/25	217.5	246.8	67.5	96.8																	
MHMF04□L□1N	400	1/5	224	253.3	84.5	113.8	89.5	50	30	26	22	19	6×3.5	6	M6	12	70	90	3	M6	78	20	60
MHMF04□L□2N		1/9	224	253.3	84.5	113.8																	
MHMF04□L□3N		1/15	234.5	263.8	84.5	113.8	100																
MHMF082L□1N	750	1/5	235.4	269	91.9	125.5	93.5	50	30	26	22	19	6×3.5	6	M6	12	70	90	3	M6	78	20	80
MHMF082L□2N		1/9	250.4	284	91.9	125.5	97.5	61	40	35	30	24	8×4	7	M8	16	90	115	5	M8	98		
MHMF082L□3N		1/15	262.9	296.5	91.9	125.5	110																
MHMF082L□4N		1/25	262.9	296.5	91.9	125.5																	

*1 The symbols of the voltage specifications and the motor structure are entered in □ of the motor part number.
Please refer to “Model Designation” in P.294.
*2 □LC: flange size of the reduction gear □, AF: □ flange size of the motor

Environmental Conditions

Item		Conditions
Ambient temperature *1		0 ˚C to 40 ˚C (free from freezing)
Ambient humidity		20 %RH to 85 %RH (free from condensation*5*6)
Storage temperature *2		–20 ˚C to 65 ˚C (Max.temperature guarantee: 80 ˚C for 72 hours free from condensation*5)
Storage humidity		20 %RH to 85 %RH (free from condensation*5*6)
Vibration	Motor only	Lower than 49 m/s^2 (5 G) at running, 24.5 m/s^2 (2.5 G) at stall*7
Impact	Motor only	Lower than 98 m/s^2 (10 G)
Enclosure rating (Motor only)	IP65 *3	MSMF, MQMF, MHMF (except rotating portion of output shaft and leadwire end.) (MSMF, MQMF, MHMF In case of leadwire type.)
	IP67 *3*4	IP67 motor (except rotating portion of output shaft and connecting pin part of the motor connector and the encoder connector)
	IP44 *3	Excludes output shaft rotating part, connector connection pin part, and motor lead hole part of terminal box.
Altitude		Lower than 1000 m

*1 Ambient temperature to be measured at 5 cm away from the motor.
*2 Permissible temperature for short duration such as transportation.
*3 These motors conform to the test conditions specified in EN standards (EN60529, EN60034-5). Do not use these motors in application where water proof performance is required such as continuous wash-down operation.
*4 This condition is applied when the connector mounting screw are tightened to the recommended tightening torque.
*5 Air containing water vapor will become saturated with water vapor as the temperature falls, causing dew.
*6 The terminal block of MDMFD22L1□□ is between 45%RH to 85%RH.
*7 For motors with rated output capacity of 5.5 kW or more, both motor rotation and stop will be 24.5 m/s^2 (2.5 G) or less.

<Note>
Initial setup of rotational direction:
positive = CCW and negative = CW.
Pay an extra attention.

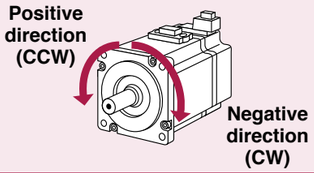

IP65	IP67
(1000 W or less) <Leadwire type>	<Connector type>

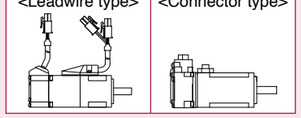

Notes on [Motor specification] page

Note) 1. Regenerative resistors are not built in drivers of A and B frames. When regeneration occurs, prepare an optional external regenerative resistor.

[At AC100 V of power voltage]
Regenerative brake frequency represents the frequency of the motor's stops from the rated speed with deceleration without load.
- If the load is connected, frequency will be defines as 1/(m+1), where m=load moment of inertia/rotor moment of inertia.
- When the motor speed exceeds the rated speed, regenerative brake frequency is in inverse proportion to the square of (running speed/rated speed).
- Power supply voltage is AC115 V (at 100 V of the main voltage).
  If the supply voltage fluctuates, frequency is in inverse proportion to the square of (Running supply voltage/115) relative to the value in the table.
- When regeneration occurs continuously such cases as running speed frequently changes or vertical feeding, consult us or a dealer.

[At AC200 V of power voltage]
Regenerative brake frequency represents the frequency of the motor's stops from the rated speed with deceleration without load.
- If the load is connected, frequency will be defines as 1/(m+1), where m=load moment of inertia/rotor moment of inertia.
- When the motor speed exceeds the rated speed, regenerative brake frequency is in inverse proportion to the square of (running speed/rated speed).
- Power supply voltage is AC230 V (at 200 V of the main voltage).
  If the supply voltage fluctuates, frequency is in inverse proportion to the square of (Running supply voltage/230) relative to the value in the table.
- When regeneration occurs continuously such cases as running speed frequently changes or vertical feeding, consult us or a dealer.

Note) 2. If the effective torque is within the rated torque, there is no limit in generative brake.
Note) 3. Consult us or a dealer if the load moment of inertia exceeds the specified value.
Note) 4. Releasing time values represent the ones with DC-cutoff using a varistor.

Permissible Load at Output Shaft

The radial load is defined as a load applied to the output shaft in the right-angle direction. This load is generated when the gear head is coupled to the machine using a chain, belt, etc., but not when the gear head is directly connected to the coupling. As shown in the right figure, the permissible value is determined based on the load applied to the L/2 position of the output shaft. The thrust load is defined as a load applied to the output shaft in the axial direction.

Because the radial load and thrust load significantly affect the life of the bearing, take care not to allow the load during operation to exceed the permissible radial load and thrust load shown in the table below.

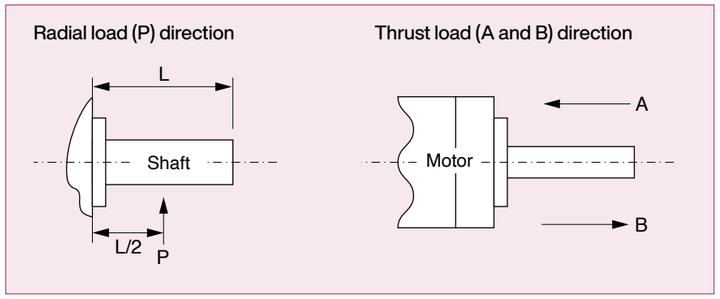

Built-in Holding Brake

In the applications where the motor drives the vertical axis, this brake would be used to hold and prevent the work (moving load) from falling by gravity while the power to the servo is shut off.

Use this built-in brake for "Holding" purpose only, that is to hold the stalling status. Never use this for "Brake" purpose to stop the load in motion.

▪ Output Timing of BRK-OFF Signal
- For the brake release timing at power-on, or braking timing at Servo-OFF/Servo-Alarm while the motor is in motion, refer to the Operating Instructions (Overall).
- With the parameter, Pr4.38 (Setup of mechanical brake action while the motor is in motion), you can set up a time between when the motor enters to a free-run from energized status and when BRK-OFF signal turns off (brake will be engaged), when the Servo-OFF or alarm occurs while the motor is in motion. For details, download a copy of the instruction manual from our website.

<Note>
1. The lining sound of the brake (chattering and etc.) might be generated while running the motor with built-in brake, however this does not affect any functionality.
2. Magnetic flux might be generated through the motor shaft while the brake coil is energized (brake is open). Pay an extra attention when magnetic sensors are used nearby the motor.

●Specifications of Built-in Holding Brake

Motor series	Motor output	Static friction torque N·m	Rotor inertia × 10^{-4} kg·m^2	Engaging time ms	Releasing time ms	Exciting current DC A (at cool-off)	Releasing voltage DC V / Exciting voltage DC V	Permissible work (J) per one braking	Permissible total work × 10^3 J	Permissible angular acceleration rad/s^2
MSMF (80 mm sq. or less)	50 W,100 W	0.294 or more	0.002	35 or less	20 or less	0.30	1 or more / 24±1.2	39.2	4.9	30000
	200 W,400 W	1.27 or more	0.018	50 or less	15 or less	0.36		137	44.1	
	750 W	2.45 or more	0.075	70 or less	20 or less	0.42		196	147	
	1000 W	3.80 or more					1 or more / 24±2.4	185	80.0	
MSMF (100 mm sq. or more)	1.0 kW, 1.5 kW, 2.0 kW	8.0 or more	0.175	50 or less	15 or less	0.81	2 or more / 24±2.4	600	50	10000
	3.0 kW	12.0 or more		80 or less					900	
	4.0 kW	16.2 or more	1.12	110 or less	50 or less	0.90		1470	2160	
	5.0 kW	22.0 or more						1545	2000	
MQMF (80 mm sq. or less)	100 W	0.39 or more	0.018	15 or less	20 or less	0.30	1 or more / 24±2.4	105	44.1	30000
	200 W, 400 W	1.6 or more	0.075	70 or less		0.36		185	80	
MHMF (80 mm sq. or less)	50 W, 100 W	0.38 or more	0.002	35 or less	20 or less	0.30	1 or more / 24±2.4	39.2	4.9	30000
	200 W, 400 W	1.6 or more	0.018	50 or less		0.36		105	44.1	
	750 W, 1000 W	3.8 or more	0.075	70 or less		0.42		185	80	
MHMF (100 mm sq. or more)	1.0 kW, 1.5 kW	13.7 or more	1.12	100 or less	50 or less	0.79	2 or more / 24±2.4	1470	2160	10000
	2.0 kW, 3.0 kW, 4.0 kW	25.0 or more	4.7	80 or less	25 or less	1.29		1800	3000	5440
	5.0 kW	44.1 or more	4.1	150 or less	30 or less				3100	5108
	7.5 kW	63.0 or more	3.9	200 or less	80 or less					
MDMF (100 mm sq. or more)	1.0 kW, 1.5 kW, 2.0 kW	13.7 or more	1.12	100 or less	50 or less	0.79	2 or more / 24±2.4	1470	2160	10000
	3.0 kW	22.0 or more		110 or less		0.90		1545	2000	
	4.0 kW	25.0 or more	4.7	80 or less	25 or less	1.29		1800	3000	5440
	5.0 kW	44.1 or more	4.1	150 or less	30 or less				3100	5108
	7.5 kW	63.0 or more	3.9	200 or less	80 or less					
	11.0 kW	100 or more	7.1	300 or less	140 or less	1.08		2000	4000	
	15.0 kW									
	22.0 kW	200 or more	28		150 or less	1.72		3000		3000
MGMF (100 mm sq. or more)	0.85 kW, 1.3 kW, 1.8 kW	13.7 or more	1.12	100 or less	50 or less	0.79	2 or more / 24±2.4	1470	2160	10000
	2.9 kW	25.0 or more	4.7	80 or less	25 or less	1.29		1800	3000	5440
	4.4 kW	44.1 or more	3.93	150 or less	30 or less				3100	5108
	5.5 kW	63.0 or more	3.9	200 or less	80 or less					

- The engaging time and releasing time represent the delay time of the brake operation.
- Releasing time values represent the ones with DC-cutoff using a varistor.
- Above values (except static friction torque, releasing voltage and exciting voltage) represent typical values.
- Backlash of the built-in holding brake is kept 2° or smaller at ex-factory point.
- Service life of the number of acceleration/deceleration with the above permissible angular acceleration is more than 10 million times. (Life end is defined as when the brake backlash drastically changes.)
- The motor brake power supply must be different from the power supply for the driver's connectors X1, X2, X3, X4, X5, X6.

Options

Contents

Specifications of Motor connector 307
Encoder Cable 309
Motor Cable 313
Brake Cable 321
Interface Cable 322
Connector Kit 323
Battery for Absolute Encoder 338
Surge Absorber for Motor Brake 339
Mounting Bracket 340
Reactor 342
External Regenerative Resistor 343
Daisy Chain 345
Cable part No. Designation 346
List of Peripheral Devices Manufacturers 347

50 W to 1000 W 80 mm sq. or less

● When the motors of <MSMF, MQMF, MHMF (Leadwire type)> are used, they are connected as shown below.

Connector: Tyco Electronics Japan G.K. (The figures below show connectors for the motor.)

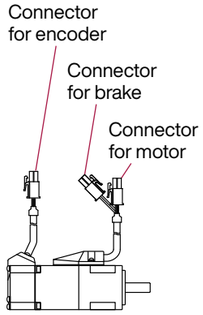

[Connector for encoder]

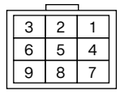

172169-1
23-bit Absolute

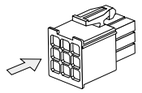

* Connector pin diagram is viewed from the direction of the arrow.

PIN No.	Application
1	BAT+*
2	BAT−*
3	FG(SHIELD)
4	PS
5	$\overline{PS}$
6	NC
7	E5V
8	E0V
9	NC

<Remarks>
Do not connect anything to NC.

* When using the motor as an incremental system, BAT+ and BAT− can be left unconnected.

[Connector for motor]

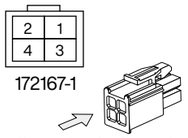

172167-1

PIN No.	Application
1	U-phase
2	V-phase
3	W-phase
4	Ground

* Connector pin diagram is viewed from the direction of the arrow.

[Connector for Brake]

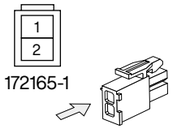

172165-1

PIN No.	Application
1	Brake
2	Brake

* Electromagnetic brake is a nonpolar device.

* Connector pin diagram is viewed from the direction of the arrow.

● When the motors of <MSMF, MQMF, MHMF (Connector type)> are used, they are connected as shown below.

Connector: Made by Japan Aviation Electronics Industry, Ltd. (The figures below show connectors for the motor.)

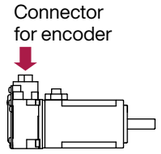

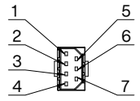

JN6CR07PM2
JN6CR07PM4
* Top view of the motor.

23-bit Absolute

PIN No.	Application
1	FG(SHIELD)
2	BAT−*
3	E0V
4	$\overline{PS}$
5	BAT+*
6	E5V
7	PS

Tightening torque of the screw (M2)
0.19 N·m to 0.21 N·m

* Be sure to use only the screw supplied with the connector, to avoid damage.

* When using the motor as an incremental system, BAT+ and BAT− can be left unconnected.

<MSMF>

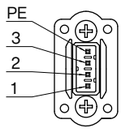

JN8AT04NJ1
* Top view of the motor.

PIN No.	Application
1	U-phase
2	V-phase
3	W-phase
PE	Ground

Tightening torque of the screw (M2)
0.085 N·m to 0.095 N·m (screwed to plastic)

* Be sure to use only the screw supplied with the connector, to avoid damage.

* Secure the gasket in place without removing it from the connector.

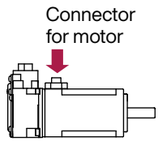

<MHMF 50 W, 100 W>

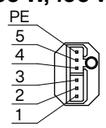

JN11AH06NN2
* Top view of the motor.

<MQMF, MHMF 200 W to 1000 W>

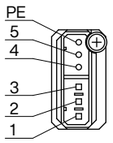

JN11AH06NN1
* Top view of the motor.

without Brake		with Brake	
PIN No.	Application	PIN No.	Application
1	U-phase	1	U-phase
2	V-phase	2	V-phase
3	W-phase	3	W-phase
4	NC	4	Brake
5	NC	5	Brake
PE	Ground	PE	Ground

Tightening torque of the screw (M2)
0.085 N·m to 0.095 N·m

* Electromagnetic brake is a nonpolar device.

* Be sure to use only the screw supplied with the connector, to avoid damage.

* Secure the gasket in place without removing it from the connector.

<Remarks> Do not connect anything to NC.

[Motor with brake] **<MSMF>**

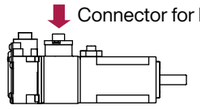

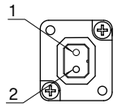

JN4AT02PJM-R
* Top view of the motor.

PIN No.	Application
1	Brake
2	Brake

Tightening torque of the screw (M2)
0.19 N·m to 0.21 N·m

* Electromagnetic brake is a nonpolar device.

* Be sure to use only the screw supplied with the connector, to avoid damage.

* Secure the gasket in place without removing it from the connector.

0.85 kW to 5.0 kW 100 mm sq. or more

● When the motors of <MSMF, MDMF, MGMF, MHMF> are used, they are connected as shown below.

Connector: Made by Japan Aviation Electronics Industry, Ltd. (The figures below show connectors for the motor.)

▪ Connector for encoder

IP67 motor Connector for encoder (Large size)

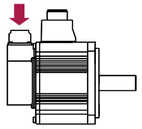

IP67 motor Connector for encoder (Small size)

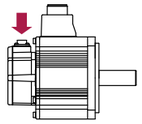

<Large size Encoder connector>

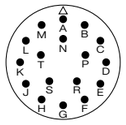

JL10-2A20-29P
23-bit Absolute

PIN No.	Application	PIN No.	Application
A	NC	K	$\overline{PS}$
B	NC	L	$\overline{PS}$
C	NC	M	NC
D	NC	N	NC
E	NC	P	NC
F	NC	R	NC
G	E0V	S	BAT− *
H	E5V	T	BAT+ *
J	FG(SHIELD)		

<Small size Encoder connector>

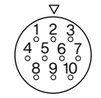

JN2AS10ML3-R
23-bit Absolute

PIN No.	Application
1	E0V
2	NC
3	PS
4	E5V
5	BAT− *
6	BAT+ *
7	$\overline{PS}$
8	NC
9	FG(SHIELD)
10	NC

<Remarks>
Do not connect anything to NC.

* When using the motor as an incremental system, BAT+ and BAT− can be left unconnected.

▪ Connector for motor/brake

Table for motor connector and brake connector

Motor part No.	Motor output	200 V	
		without Brake	with Brake
MSMF	1.0 kW to 2.0 kW	A	C
	3.0 kW to 5.0 kW	B	D
MDMF	1.0 kW to 2.0 kW	A	C
	3.0 kW to 5.0 kW	B	D
	7.5 kW to 15.0 kW	E	E, F
	22.0 kW	G	G, F
MGMF	0.85 kW to 1.8 kW	A	C
	2.4 kW to 4.4 kW	B	D
	5.5 kW	E	E, F
MHMF	1.0 kW to 1.5 kW	A	C
	2.0 kW to 5.0 kW	B	D
	7.5 kW	E	E, F

Connector for motor/brake

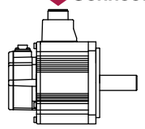

* Electromagnetic brake is a nonpolar device.

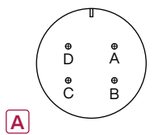

A
JL10-2E20-4PE-B

PIN No.	Application
A	U-phase
B	V-phase
C	W-phase
D	Ground

B
JL10-2E22-22PE-B

PIN No.	Application
A	U-phase
B	V-phase
C	W-phase
D	Ground

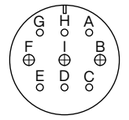

C
JL10-2E20-18PE-B

PIN No.	Application
G	with Brake: Brake
	without Brake : NC
H	with Brake: Brake
	without Brake : NC
A	NC
F	U-phase
I	V-phase
B	W-phase
E	Ground
D	Ground
C	NC



D
JL10-2E24-11PE-B

PIN No.	Application
A	with Brake: Brake
	without Brake : NC
B	with Brake: Brake
	without Brake : NC
C	NC
D	U-phase
E	V-phase
F	W-phase
G	Ground
H	Ground
I	NC

<Remarks> Do not connect anything to NC.

Connector for motor

Connector for brake

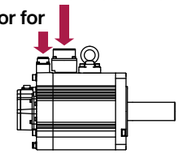

Connector for brake

Terminal box for motor

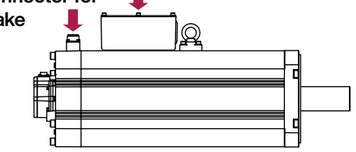

<Motor>

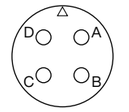

E
JL04V-2E32-17PE-B-R

PIN No.	Application
A	U-phase
B	V-phase
C	W-phase
D	Ground

<Brake>

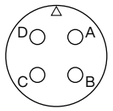

F
N/MS3102A 14S-2P

PIN No.	Application
A	Brake
B	Brake
C	NC
D	NC

* Electromagnetic brake is a nonpolar device.

<Terminal block>

G

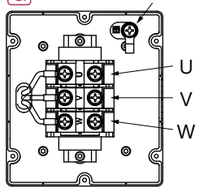

Terminal	Application
U	U-phase
V	V-phase
W	W-phase
Ground	Ground

▪ U, V, W, Earth screw
Nominal: M8
Tightening torque:
12.0 N·m

Encoder Cable * It doesn't correspond to IP65 and IP67.

Part No.	MFECA0 ＊ ＊ 0EAD	80 mm sq. or less Applicable model	MSMF 50 W to 1000 W, MQMF 100 W to 400 W MHMF 50 W to 1000 W (Leadwire type)
Specifications	23-bit absolute encoder When used in incremental system (without battery box)		

[Unit: mm]

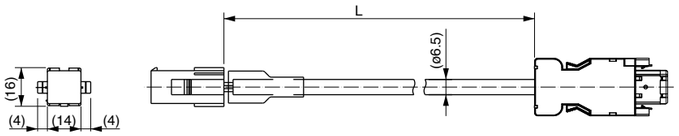

Title	Part No.	Manufacturer
Connector (Driver side)	3E206-0100 KV	Sumitomo 3M (or equivalent)
Shell kit	3E306-3200-008	
Connector (Motor side)	172161-1	Tyco Electronics Japan G.K.
Connector pin	170365-1	
Cable	0.20 mm²×3P (6-wire)	Oki Electric Cable Co., Ltd.

L (m)	Part No.(ex.)
3	MFECA0030EAD
5	MFECA0050EAD
10	MFECA0100EAD
20	MFECA0200EAD

Part No.	MFECA0 ＊ ＊ 0EAE	80 mm sq. or less Applicable model	MSMF 50 W to 1000 W, MQMF 100 W to 400 W MHMF 50 W to 1000 W (Leadwire type)
Specifications	23-bit absolute encoder When used in absolute system (with battery box) *		

* Battery is not included. Please buy the absolute encoder battery "DV0P2990" separately.

[Unit: mm]

Title	Part No.	Manufacturer
Connector (Driver side)	3E206-0100 KV	Sumitomo 3M (or equivalent)
Shell kit	3E306-3200-008	
Connector (Motor side)	172161-1	Tyco Electronics Japan G.K.
Connector pin	170365-1	
Cable	0.20 mm²×4P (8-wire)	Oki Electric Cable Co., Ltd.

L (m)	Part No.(ex.)
3	MFECA0030EAE
5	MFECA0050EAE
10	MFECA0100EAE
20	MFECA0200EAE

Part No.	MFECA0 ＊ ＊ 0MJD (Highly bendable type, Direction of motor shaft) MFECA0 ＊ ＊ 0MKD (Highly bendable type, Opposite direction of motor shaft) MFECA0 ＊ ＊ 0TJD (Standard bendable type, Direction of motor shaft) MFECA0 ＊ ＊ 0TKD (Standard bendable type, Opposite direction of motor shaft)	80 mm sq. or less Applicable model	MSMF 50 W to 1000 W MQMF 100 W to 400 W MHMF 50 W to 1000 W (Connector type)
Specifications	23-bit absolute encoder When used in incremental system (without battery box)		

[Unit: mm]

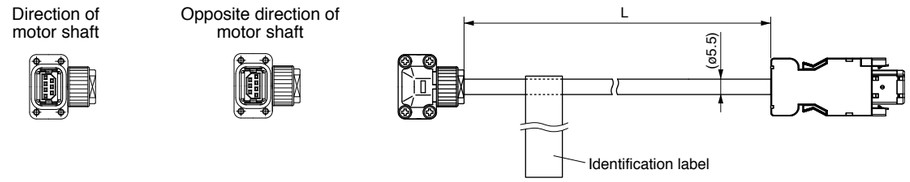

Title	Part No.	Manufacturer
Connector (Driver side)	3E206-0100 KV	Sumitomo 3M (or equivalent)
Shell kit	3E306-3200-008	
Connector (Motor side)	JN6FR07SM1	Japan Aviation Electronics Ind.
Connector pin	LY10-C1-A1-10000	
Cable	AWG24 4-wire, AWG22 2-wire (ø5.5)	Hitachi Cable, Ltd.

L (m)	Part No.(ex.)
3	MFECA0030MJD
5	MFECA0050MJD
10	MFECA0100MJD
20	MFECA0200MJD

Part No.	MFECA0 ＊ ＊ 0MJE (Highly bendable type, Direction of motor shaft) MFECA0 ＊ ＊ 0MKE (Highly bendable type, Opposite direction of motor shaft) MFECA0 ＊ ＊ 0TJE (Standard bendable type, Direction of motor shaft) MFECA0 ＊ ＊ 0TKE (Standard bendable type, Opposite direction of motor shaft)	80 mm sq. or less Applicable model	MSMF 50 W to 1000 W MQMF 100 W to 400 W MHMF 50 W to 1000 W (Connector type)
Specifications	23-bit absolute encoder When used in absolute system (with battery box) *		

* Battery is not included. Please buy the absolute encoder battery "DV0P2990" separately.

[Unit: mm]

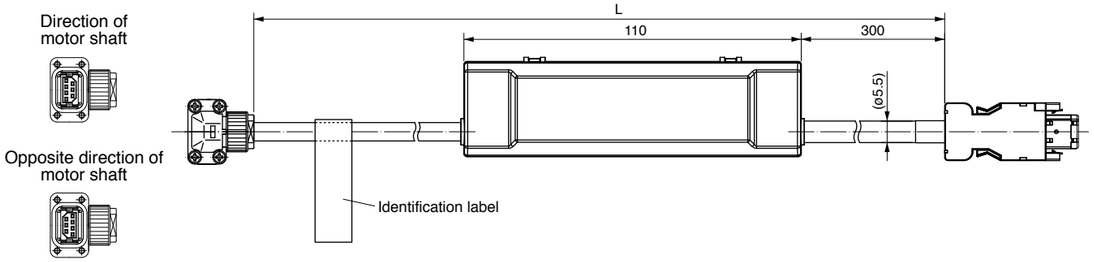

Title	Part No.	Manufacturer
Connector (Driver side)	3E206-0100 KV	Sumitomo 3M (or equivalent)
Shell kit	3E306-3200-008	
Connector (Motor side)	JN6FR07SM1	Japan Aviation Electronics Ind.
Connector pin	LY10-C1-A1-10000	
Cable	AWG24 4-wire、AWG22 2-wire (ϕ5.5)	Hitachi Cable, Ltd.

L (m)	Part No.(ex.)
3	MFECA0030MJE
5	MFECA0050MJE
10	MFECA0100MJE
20	MFECA0200MJE

Encoder Cable * It doesn't correspond to IP65 and IP67.

Part No.	MFECA0 ＊＊ 0EPD	100 mm sq. or more Applicable motor output	0.85 kW to 22.0 kW
Specifications	23-bit absolute encoder When used in incremental system (without battery box) <Large one-touch lock type>		

[Unit: mm]

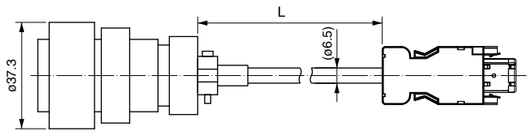

Title	Part No.	Manufacturer
Connector (Driver side)	3E206-0100 KV	Sumitomo 3M (or equivalent)
Shell kit	3E306-3200-008	
Connector (Motor side)	JL10-6A20-29S-EB	Japan Aviation Electronics Ind.
Cable clamp	JL04-2022CK(09)-R	
Cable	0.2 mm² ×3P (6-wire)	Oki Electric Cable Co., Ltd.

L (m)	Part No.(ex.)
3	MFECA0030EPD
5	MFECA0050EPD
10	MFECA0100EPD
20	MFECA0200EPD

Part No.	MFECA0 ＊＊ 0ESD	100 mm sq. or more Applicable motor output	0.85 kW to 22.0 kW
Specifications	23-bit absolute encoder When used in incremental system (without battery box) <Large screwed type>		

[Unit: mm]

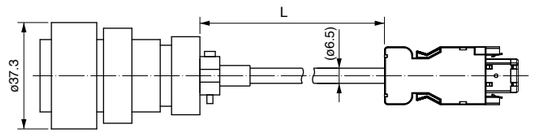

Title	Part No.	Manufacturer
Connector (Driver side)	3E206-0100 KV	Sumitomo 3M (or equivalent)
Shell kit	3E306-3200-008	
Connector (Motor side)	N/MS3106B20-29S	Japan Aviation Electronics Ind.
Cable clamp	N/MS3057-12A	
Cable	0.2 mm² ×3P (6-wire)	Oki Electric Cable Co., Ltd.

L (m)	Part No.(ex.)
3	MFECA0030ESD
5	MFECA0050ESD
10	MFECA0100ESD
20	MFECA0200ESD

Part No.	MFECA0 ＊＊ 0EPE	100 mm sq. or more Applicable motor output	0.85 kW to 22.0 kW (IP67 motor)
Specifications	23-bit absolute encoder When used in absolute system (with battery box) * <Large one-touch lock type>		

* Battery is not included. Please buy the absolute encoder battery "DV0P2990" separately.

[Unit: mm]

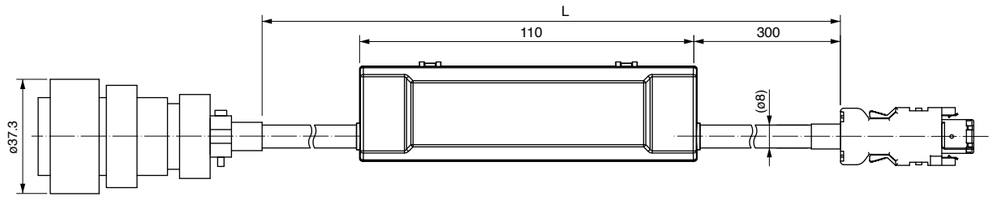

Title	Part No.	Manufacturer
Connector (Driver side)	3E206-0100 KV	Sumitomo 3M (or equivalent)
Shell kit	3E306-3200-008	
Connector (Motor side)	JL10-6A20-29S-EB	Japan Aviation Electronics Ind.
Cable clamp	JL04-2022CK(09)-R	
Cable	0.2 mm² ×3P (6-wire)	Oki Electric Cable Co., Ltd.

L (m)	Part No.(ex.)
3	MFECA0030EPE
5	MFECA0050EPE
10	MFECA0100EPE
20	MFECA0200EPE

Part No.	MFECA0 ＊＊ 0ESE	100 mm sq. or more Applicable motor output	0.85 kW to 22.0 kW (IP67 motor)
Specifications	23-bit absolute encoder When used in absolute system (with battery box) * <Large screwed type>		

* Battery is not included. Please buy the absolute encoder battery "DV0P2990" separately.

[Unit: mm]

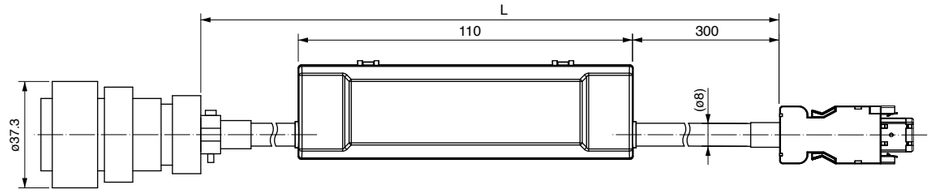

Title	Part No.	Manufacturer
Connector (Driver side)	3E206-0100 KV	Sumitomo 3M (or equivalent)
Shell kit	3E306-3200-008	
Connector (Motor side)	N/MS3106B20-29S	Japan Aviation Electronics Ind.
Cable clamp	N/MS3057-12A	
Cable	0.2 mm² ×4P (8-wire)	Oki Electric Cable Co., Ltd.

L (m)	Part No.(ex.)
3	MFECA0030ESE
5	MFECA0050ESE
10	MFECA0100ESE
20	MFECA0200ESE

Part No.	MFECA0 ＊＊ 0ETD	100 mm sq. or more Applicable motor output	0.85 kW to 22.0 kW (IP67 motor)
Specifications	23-bit absolute encoder When used in incremental system (without battery box) <Small one-touch lock type>		

[Unit: mm]

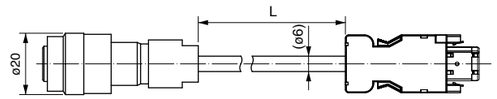

Title	Part No.	Manufacturer
Connector (Driver side)	3E206-0100 KV	Sumitomo 3M (or equivalent)
Shell kit	3E306-3200-008	
Connector (Motor side)	JN2DS10SL1-R	Japan Aviation Electronics Ind.
Connector pin	JN1-22-22S-PKG100	
Cable	0.2 mm² ×3P (6-wire)	Oki Electric Cable Co., Ltd.

L (m)	Part No.(ex.)
3	MFECA0030ETD
5	MFECA0050ETD
10	MFECA0100ETD
20	MFECA0200ETD

Part No.	MFECA0 ＊＊ 0ETE	100 mm sq. or more Applicable motor output	0.85 kW to 22.0 kW (IP67 motor)
Specifications	23-bit absolute encoder When used in absolute system (with battery box) * <Small one-touch lock type>		

* Battery is not included. Please buy the absolute encoder battery "DV0P2990" separately.

[Unit: mm]

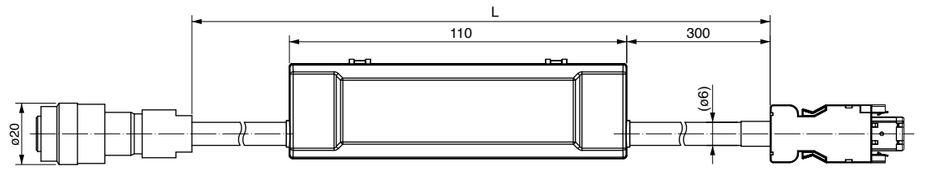

Title	Part No.	Manufacturer
Connector (Driver side)	3E206-0100 KV	Sumitomo 3M (or equivalent)
Shell kit	3E306-3200-008	
Connector (Motor side)	JN2DS10SL1-R	Japan Aviation Electronics Ind.
Connector pin	JN1-22-22S-PKG100	
Cable	0.2 mm² ×3P (6-wire)	Oki Electric Cable Co., Ltd.

L (m)	Part No.(ex.)
3	MFECA0030ETE
5	MFECA0050ETE
10	MFECA0100ETE
20	MFECA0200ETE

Motor Cable (without Brake) * It doesn't correspond to IP65 and IP67.

Part No.	MFMCA0 ＊＊ 0EED	80 mm sq. or less Applicable model	MSMF 50 W to 1000 W, MQMF 100 W to 400 W MHMF 50 W to 1000 W (Leadwire type)

[Unit: mm]

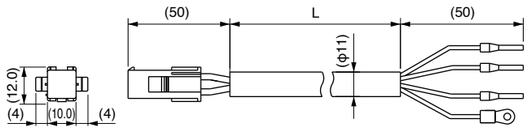

Title	Part No.	Manufacturer
Connector	172159-1	Tyco Electronics Japan G.K.
Cable clamp	170366-1	
Rod terminal	AI0.75-8GY	PHOENIX CONTACT
Nylon insulated round terminal	N1.25-M4	J.S.T Mfg. Co., Ltd.
Cable	ROBO-TOP 600V 0.75 mm² 4-wire	DYDEN CORPORATION

L (m)	Part No.(ex.)
3	MFMCA0030EED
5	MFMCA0050EED
10	MFMCA0100EED
20	MFMCA0200EED

Part No.		80 mm sq. or less Applicable model	
	MFMCA0 ＊＊ 0NJD (Highly bendable type, Direction of motor shaft)		MSMF 50 W to 1000 W (Connector type)
	MFMCA0 ＊＊ 0RJD (Standard bendable type, Direction of motor shaft)		
	MFMCA0 ＊＊ 0NKD (Highly bendable type, Opposite direction of motor shaft)		MSMF 200 W to 1000 W (Connector type)
	MFMCA0 ＊＊ 0RKD (Standard bendable type, Opposite direction of motor shaft)		

[Unit: mm]

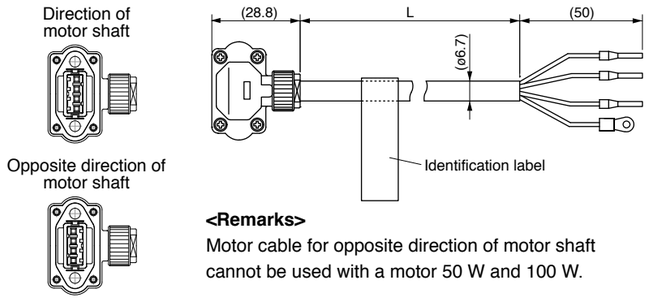

<Remarks>
Motor cable for opposite direction of motor shaft cannot be used with a motor 50 W and 100 W.

Title	Part No.	Manufacturer
Connector	JN8FT04SJ1	Japan Aviation Electronics Ind.
Cable clamp	ST-TMH-S-C1B-3500	
Rod terminal	AI0.75-8GY	PHOENIX CONTACT
Nylon insulated round terminal	N1.25-M4	J.S.T Mfg. Co., Ltd.
Cable	AWG18 4-wire (φ6.7 mm)	Hitachi Cable, Ltd.

L (m)	Part No.(ex.)
3	MFMCA0030NJD
5	MFMCA0050NJD
10	MFMCA0100NJD
20	MFMCA0200NJD

Part No.			80 mm sq. or less Applicable model	
	MFMCA0 ＊＊ 7UFD	(Movable/fixed common-use, direction of motor shaft)		MHMF 50 W, 100 W (Connector type)
	MFMCA0 ＊＊ 7UGD	(Movable/fixed common-use, opposite directionof motor shaft)		

[Unit: mm]

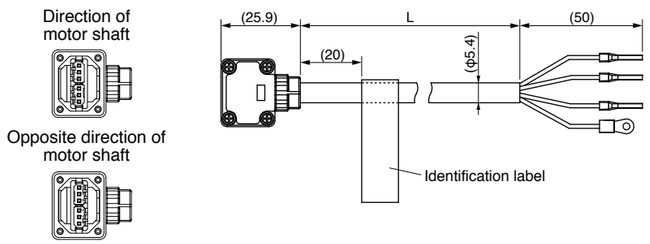

Title	Part No.	Manufacturer
Connector	JN11FH06SN2	Japan Aviation Electronics Ind.
Cable clamp	JN11S10K4A1	
Rod terminal	AI0.34-8TQ	PHOENIX CONTACT
Nylon insulated round terminal	N1.25-M4	J.S.T Mfg. Co., Ltd.
Cable	AWG22 6-wire (φ5.4 mm)	NIKKO ELECTRIC WIRE CO.,LTD

L (m)	Part No.(ex.)
3	MFMCA0037UFD
5	MFMCA0057UFD
10	MFMCA0107UFD
20	MFMCA0207UFD

Part No.			80 mm sq. or less Applicable model	
	MFMCA0 ＊＊ 0UFD	(Highly bendable type, Direction of motor shaft)		MQMF 100 W to 400 W MHMF 200 W to 1000 W (Connector type)
	MFMCA0 ＊＊ 0UGD	(Highly bendable type, Opposite direction of motor shaft)		
	MFMCA0 ＊＊ 0WFD	(Standard bendable type, Direction of motor shaft)		
	MFMCA0 ＊＊ 0WGD	(Standard bendable type, Opposite direction of motor shaft)		

[Unit: mm]

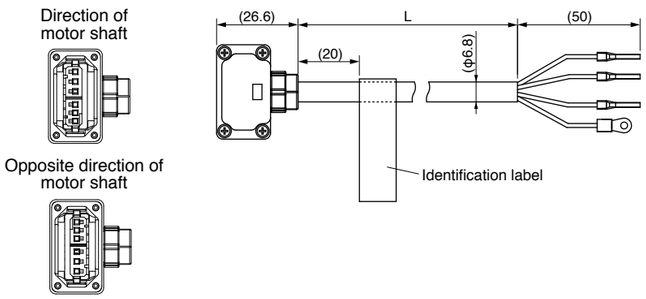

Title	Part No.	Manufacturer
Connector	JN11FH06SN1	Japan Aviation Electronics Ind.
Cable clamp	JN11S35H3A1	
Rod terminal	AI0.75-8GY	PHOENIX CONTACT
Nylon insulated round terminal	N1.25-M4	J.S.T Mfg. Co., Ltd.
Cable	AWG18 6-wire (φ6.8)	NIKKO ELECTRIC WIRE CO.,LTD

L (m)	Part No.(ex.)
3	MFMCA0030UFD
5	MFMCA0050UFD
10	MFMCA0100UFD
20	MFMCA0200UFD

Part No.	MFMCDO ＊＊ 2EUD	100 mm sq. or more Applicable model	MSMF 1.0 kW to 2.0 kW, MDMF 1.0 kW to 2.0 kW MHMF 1.0 kW, 1.5 kW, MGMF 0.85 kW to 1.8 kW <One-touch lock type>

[Unit: mm]

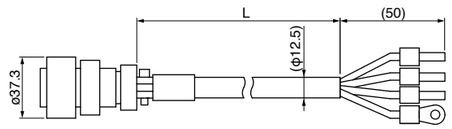

Title	Part No.	Manufacturer
Connector	JL10-6A20-4SE-EB	Japan Aviation Electronics Ind.
Cable clamp	JL04-2022CK(14)-R	
Rod terminal	NTUB-2	J.S.T Mfg. Co., Ltd.
Nylon insulated round terminal	N2-M4	J.S.T Mfg. Co., Ltd.
Cable	ROBO-TOP 600V 2.0mm² 4-wire	DYDEN CORPORATION

L (m)	Part No.(ex.)
3	MFMCD0032EUD
5	MFMCD0052EUD
10	MFMCD0102EUD
20	MFMCD0202EUD

Part No.	MFMCDO ＊＊ 2ECD	100 mm sq. or more Applicable model	MSMF 1.0 kW to 2.0 kW, MDMF 1.0 kW to 2.0 kW MHMF 1.0 kW, 1.5 kW, MGMF 0.85 kW to 1.8 kW <Screwed type>

[Unit: mm]

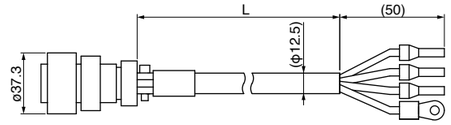

Title	Part No.	Manufacturer
Connector	JL04V-6A20-4SE-EB-RK	Japan Aviation Electronics Ind.
Cable clamp	JL04-2022CK(14)-R	
Rod terminal	NTUB-2	J.S.T Mfg. Co., Ltd.
Nylon insulated round terminal	N2-M4	J.S.T Mfg. Co., Ltd.
Cable	ROBO-TOP 600V 2.0mm² 4-wire	DYDEN CORPORATION

L (m)	Part No.(ex.)
3	MFMCD0032ECD
5	MFMCD0052ECD
10	MFMCD0102ECD
20	MFMCD0202ECD

Motor Cable (without Brake) * It doesn't correspond to IP65 and IP67.

Part No.	MFMCEO ＊＊ 2EUD	100 mm sq. or more Applicable model	MHMF 2.0 kW <One-touch lock type>

[Unit: mm]

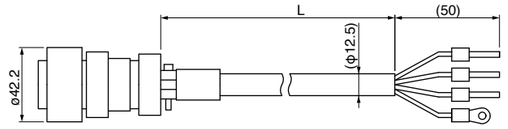

Title	Part No.	Manufacturer
Connector	JL10-6A22-22SE-EB	Japan Aviation Electronics Ind.
Cable clamp	JL04-2022CK(14)-R	
Rod terminal	NTUB-2	J.S.T Mfg. Co., Ltd.
Nylon insulated round terminal	N2-M4	J.S.T Mfg. Co., Ltd.
Cable	ROBO-TOP DP6/2501 2.0 mm² 4-wire	DYDEN CORPORATION

L (m)	Part No.(ex.)
3	MFMCE0032EUD
5	MFMCE0052EUD
10	MFMCE0102EUD
20	MFMCE0202EUD

Part No.	MFMCEO ＊＊ 2ECD	100 mm sq. or more Applicable model	MHMF 2.0 kW <Screwed type>

[Unit: mm]

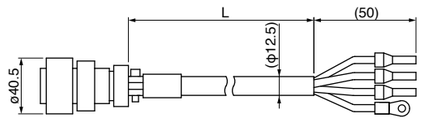

Title	Part No.	Manufacturer
Connector	JL04V-6A22-22SE-EB-R	Japan Aviation Electronics Ind.
Cable clamp	JL04-2022CK(14)-R	
Rod terminal	NTUB-2	J.S.T Mfg. Co., Ltd.
Nylon insulated round terminal	N2-M4	J.S.T Mfg. Co., Ltd.
Cable	ROBO-TOP 600V 2.0 mm² 4-wire	DYDEN CORPORATION

L (m)	Part No.(ex.)
3	MFMCE0032ECD
5	MFMCE0052ECD
10	MFMCE0102ECD
20	MFMCE0202ECD

Part No.	MFMCE0 ＊＊ 3EUT	100 mm sq. or more Applicable model	MGMF 2.4 kW <One-touch lock type>

[Unit: mm]

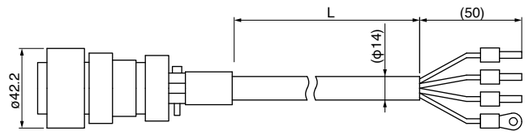

Title	Part No.	Manufacturer
Connector	JL10-6A22-22SE-EB	Japan Aviation Electronics Ind.
Cable clamp	JL04-2022CK(14)-R	
Rod terminal	TMENTC3.5-11S	NICHIFU Co., Ltd.
Nylon insulated round terminal	N5.5-5	J.S.T Mfg. Co., Ltd.
Cable	ROBO-TOP DP6/2501 3.5 mm² 4-wire	DYDEN CORPORATION

L (m)	Part No.(ex.)
3	MFMCE0033EUT
5	MFMCE0053EUT
10	MFMCE0103EUT
20	MFMCE0203EUT

Part No.	MFMCE0 ＊＊ 3ECT	100 mm sq. or more Applicable model	MGMF 2.4 kW <Screwed type>

[Unit: mm]

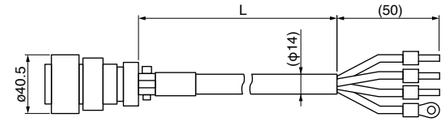

Title	Part No.	Manufacturer
Connector	JL04V-6A22-22SE-EB-R	Japan Aviation Electronics Ind.
Cable clamp	JL04-2022CK(14)-R	
Rod terminal	TMENTC3.5-11S	NICHIFU Co., Ltd.
Nylon insulated round terminal	N5.5-5	J.S.T Mfg. Co., Ltd.
Cable	ROBO-TOP 600V 3.5 mm² 4-wire	DYDEN CORPORATION

L (m)	Part No.(ex.)
3	MFMCE0033ECT
5	MFMCE0053ECT
10	MFMCE0103ECT
20	MFMCE0203ECT

Part No.	MFMCAO ＊＊ 3EUT	100 mm sq. or more Applicable model	MSMF 3.0 kW to 5.0 kW, MDMF 3.0 kW to 5.0 kW MHMF 3.0 kW to 5.0 kW, MGMF 2.9 kW to 4.4 kW <One-touch lock type>

[Unit: mm]

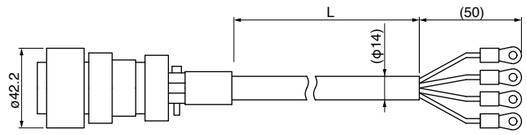

Title	Part No.	Manufacturer
Connector	JL10-6A22-22SE-EB	Japan Aviation Electronics Ind.
Cable clamp	JL04-2022CK(14)-R	
Nylon insulated round terminal	N5.5-5	J.S.T Mfg. Co., Ltd.
Cable	ROBO-TOP DP6/2501 3.5 mm² 4-wire	DYDEN CORPORATION

L (m)	Part No.(ex.)
3	MFMCA0033EUT
5	MFMCA0053EUT
10	MFMCA0103EUT
20	MFMCA0203EUT

Part No.	MFMCAO ＊＊ 3ECT	100 mm sq. or more Applicable model	MSMF 3.0 kW to 5.0 kW, MDMF 3.0 kW to 5.0 kW MHMF 3.0 kW to 5.0 kW, MGMF 2.9 kW to 4.4 kW <Screwed type>

[Unit: mm]

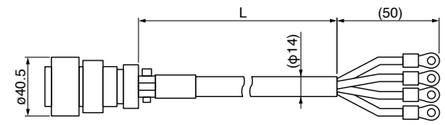

Title	Part No.	Manufacturer
Connector	JL04V-6A22-22SE-EB-R	Japan Aviation Electronics Ind.
Cable clamp	JL04-2022CK(14)-R	
Nylon insulated round terminal	N5.5-5	J.S.T Mfg. Co., Ltd.
Cable	ROBO-TOP 600V 3.5 mm² 4-wire	DYDEN CORPORATION

L (m)	Part No.(ex.)
3	MFMCA0033ECT
5	MFMCA0053ECT
10	MFMCA0103ECT
20	MFMCA0203ECT

Motor Cable (with Brake) * It doesn't correspond to IP65 and IP67.

Part No.			80 mm sq. or less Applicable model	
	MFMCA0 ＊＊ 7VFD	(Movable/fixed common-use, direction of motor shaft)		MHMF 50 W, 100 W (Connector type)
	MFMCA0 ＊＊ 7VGD	(Movable/fixed common-use, opposite directionof motor shaft)		

[Unit: mm]

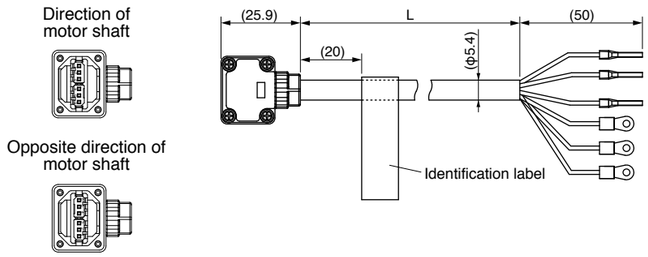

Title	Part No.	Manufacturer
Connector	JN11FH06SN2	Japan Aviation Electronics Ind.
Cable clamp	JN11S10K4A1	
Rod terminal	AI0.34-8TQ	PHOENIX CONTACT
Nylon insulated round terminal	N1.25-M4	J.S.T Mfg. Co., Ltd.
Cable	AWG22 6-wire（ϕ5.4 mm）	NIKKO ELECTRIC WIRE CO.,LTD

L (m)	Part No.(ex.)
3	MFMCA0037VFD
5	MFMCA0057VFD
10	MFMCA0107VFD
20	MFMCA0207VFD

Part No.			80 mm sq. or less Applicable model	
	MFMCA0 ＊＊ 0VFD	(Highly bendable type, Direction of motor shaft)		MQMF 100 W to 400 W MHMF 200 W to 1000 W (Connector type)
	MFMCA0 ＊＊ 0VGD	(Highly bendable type, Opposite direction of motor shaft)		
	MFMCA0 ＊＊ 0XFD	(Standard bendable type, Direction of motor shaft)		
	MFMCA0 ＊＊ 0XGD	(Standard bendable type, Opposite direction of motor shaft)		

[Unit: mm]

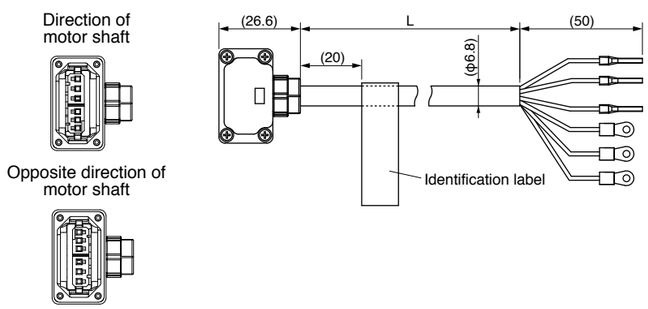

Title	Part No.	Manufacturer
Connector	JN11FH06SN1	Japan Aviation Electronics Ind.
Cable clamp	JN11S35H3A1	
Rod terminal	AI0.75-8GY	PHOENIX CONTACT
Nylon insulated round terminal	N1.25-M4	J.S.T Mfg. Co., Ltd.
Cable	AWG18 6-wire（ϕ6.8 mm）	NIKKO ELECTRIC WIRE CO.,LTD

L (m)	Part No.(ex.)
3	MFMCA0030VFD
5	MFMCA0050VFD
10	MFMCA0100VFD
20	MFMCA0200VFD

Part No.		100 mm sq. or more Applicable model	
	MFMCA0 ＊＊ 2FUD		MSMF 1.0 kW to 2.0 kW, MDMF 1.0 kW to 2.0 kW MHMF 1.0 kW to 1.5 kW, MGMF 0.85 kW to 1.8 kW <One-touch lock type>

[Unit: mm]

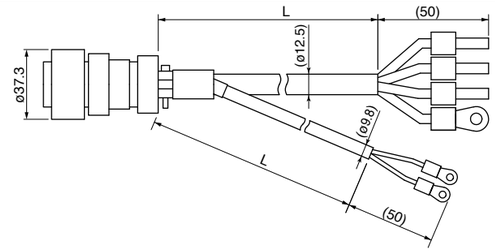

Title		Part No.	Manufacturer
Connector		JL10-6A20-18SE-EB	Japan Aviation Electronics Ind.
Cable clamp		JL042022CK(14)-R	
Rod terminal		NTUB-2	J.S.T Mfg. Co., Ltd.
Nylon insulated round terminal	Earth	N2-M4	J.S.T Mfg. Co., Ltd.
	Brake	N1.25-M4	
Cable		ROBO-TOP 600V 2.0 mm² 4-wire ROBO-TOP 600V 0.75 mm² 2-wire	DYDEN CORPORATION

L (m)	Part No.(ex.)
3	MFMCA0032FUD
5	MFMCA0052FUD
10	MFMCA0102FUD
20	MFMCA0202FUD

Part No.		100 mm sq. or more Applicable model	
	MFMCA0 ＊＊ 2FCD		MSMF 1.0 kW to 2.0 kW, MDMF 1.0 kW to 2.0 kW MHMF 1.0 kW to 1.5 kW, MGMF 0.85 kW to 1.8 kW <Screwed type>

[Unit: mm]

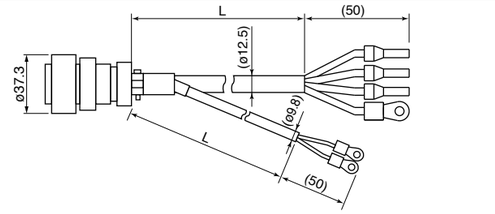

Title		Part No.	Manufacturer
Connector		JL04V-6A20-18SE-EB-RK	Japan Aviation Electronics Ind.
Cable clamp		JL04-2022CK(14)-R	
Rod terminal		NTUB-2	J.S.T Mfg. Co., Ltd.
Nylon insulated round terminal	Earth	N2-M4	J.S.T Mfg. Co., Ltd.
	Brake	N1.25-M4	
Cable		ROBO-TOP 600V 2.0 mm² 4-wire ROBO-TOP 600V 0.75 mm² 2-wire	DYDEN CORPORATION

L (m)	Part No.(ex.)
3	MFMCA0032FCD
5	MFMCA0052FCD
10	MFMCA0102FCD
20	MFMCA0202FCD

Part No.		100 mm sq. or more Applicable model	
	MFMCE0 ＊＊ 2FUD		MHMF 2.0 kW <One-touch lock type>

[Unit: mm]

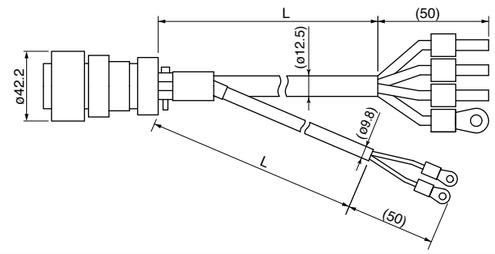

Title		Part No.	Manufacturer
Connector		JL10-6A24-11SE-EB	Japan Aviation Electronics Ind.
Cable clamp		JL04-2428CK(17)-R	
Rod terminal		NTUB-2	J.S.T Mfg. Co., Ltd.
Nylon insulated round terminal	Earth	N2-M4	J.S.T Mfg. Co., Ltd.
	Brake	N1.25-M4	
Cable		ROBO-TOP DP6/2501 2.0 mm² 4-wire ROBO-TOP DP6/2501 0.75 mm² 2-wire	DYDEN CORPORATION

L (m)	Part No.(ex.)
3	MFMCE0032FUD
5	MFMCE0052FUD
10	MFMCE0102FUD
20	MFMCE0202FUD

Motor Cable (with Brake) * It doesn't correspond to IP65 and IP67.

Part No.	MFMCE0 ∗ ∗ 2FCD	100 mm sq. or more Applicable model	MHMF 2.0 kW <Screwed type>

[Unit: mm]

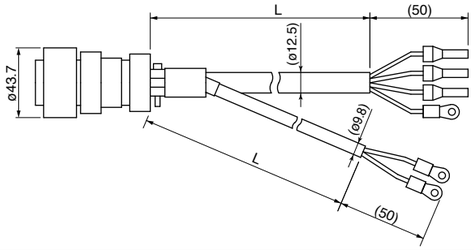

Title		Part No.	Manufacturer
Connector		JL04V-6A24-11SE-EB-R	Japan Aviation Electronics Ind.
Cable clamp		JL04-2428CK(17)-R	
Rod terminal		NTUB-2	J.S.T Mfg. Co., Ltd.
Nylon insulated round terminal	Earth	N2-M4	J.S.T Mfg. Co., Ltd.
	Brake	N1.25-M4	
Cable		ROBO-TOP 600V 2.0 mm² 4-wire ROBO-TOP 600V 0.75 mm² 2-wire	DYDEN CORPORATION

L (m)	Part No.(ex.)
3	MFMCE0032FCD
5	MFMCE0052FCD
10	MFMCE0102FCD
20	MFMCE0202FCD

Part No.	MFMCD0 ∗ ∗ 3FUT	100 mm sq. or more Applicable model	MGMF 2.4 kW <One-touch lock type>

[Unit: mm]

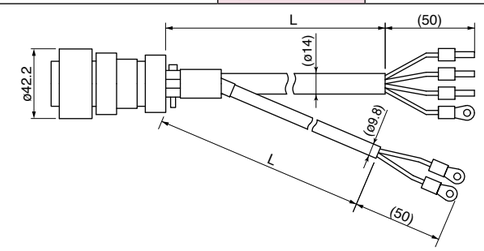

Title		Part No.	Manufacturer
Connector		JL10-6A24-11SE-EB	Japan Aviation Electronics Ind.
Cable clamp		JL04-2428CK(17)-R	
Rod terminal		TMENTC3.5-11S	NICHIFU Co., Ltd.
Nylon insulated round terminal	Earth	N5.5-5	J.S.T Mfg. Co., Ltd.
	Brake	N1.25-M4	
Cable		ROBO-TOP DP6/2501 3.5 mm² 4-wire ROBO-TOP DP6/2501 0.75 mm² 2-wire	DYDEN CORPORATION

L (m)	Part No.(ex.)
3	MFMCD0033FUT
5	MFMCD0053FUT
10	MFMCD0103FUT
20	MFMCD0203FUT

Part No.	MFMCD0 ∗ ∗ 3FCT	100 mm sq. or more Applicable model	MGMF 2.4 kW <Screwed type>

[Unit: mm]

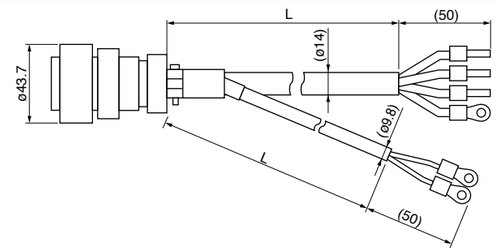

Title		Part No.	Manufacturer
Connector		JL04V-6A24-11SE-EB-R	Japan Aviation Electronics Ind.
Cable clamp		JL04-2428CK(17)-R	
Rod terminal		TMENTC3.5-11S	NICHIFU Co., Ltd.
Nylon insulated round terminal	Earth	N5.5-5	J.S.T Mfg. Co., Ltd.
	Brake	N1.25-M4	
Cable		ROBO-TOP 600V 3.5 mm² 4-wire ROBO-TOP 600V 0.75 mm² 2-wire	DYDEN CORPORATION

L (m)	Part No.(ex.)
3	MFMCD0033FCT
5	MFMCD0053FCT
10	MFMCD0103FCT
20	MFMCD0203FCT

Part No.	MFMCA0 ∗ ∗ 3FUT	100 mm sq. or more Applicable model	MSMF 3.0 kW to 5.0 kW, MDMF 3.0 kW to 5.0 kW MHMF 3.0 kW to 5.0 kW, MGMF 2.9 kW, 4.4 kW <One-touch lock type>

[Unit: mm]

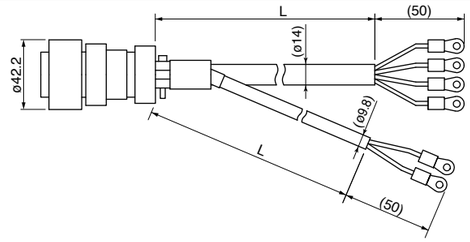

Title		Part No.	Manufacturer
Connector		JL10-6A24-11SE-EB	Japan Aviation Electronics Ind.
Cable clamp		JL04-2428CK(17)-R	
Nylon insulated round terminal	Earth	N5.5-5	J.S.T Mfg. Co., Ltd.
	Brake	N1.25-M4	
Cable		ROBO-TOP DP6/2501 3.5 mm² 4-wire ROBO-TOP DP6/2501 0.75 mm² 2-wire	DYDEN CORPORATION

L (m)	Part No.(ex.)
3	MFMCA0033FUT
5	MFMCA0053FUT
10	MFMCA0103FUT
20	MFMCA0203FUT

Part No.	MFMCA0 ∗ ∗ 3FCT	100 mm sq. or more Applicable model	MSMF 3.0 kW to 5.0 kW, MDMF 3.0 kW to 5.0 kW MHMF 3.0 kW to 5.0 kW, MGMF 2.9 kW, 4.4 kW <Screwed type>

[Unit: mm]

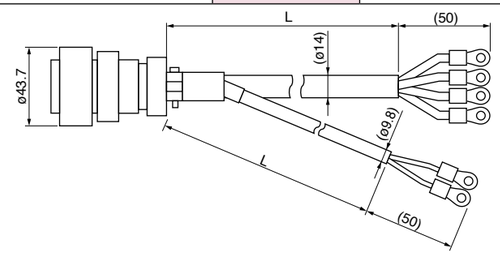

Title		Part No.	Manufacturer
Connector		JL04V-6A24-11SE-EB-R	Japan Aviation Electronics Ind.
Cable clamp		JL04-2428CK(17)-R	
Nylon insulated round terminal	Earth	N5.5-5	J.S.T Mfg. Co., Ltd.
	Brake	N1.25-M4	
Cable		ROBO-TOP 600V 3.5 mm² 4-wire ROBO-TOP 600V 0.75 mm² 2-wire	DYDEN CORPORATION

L (m)	Part No.(ex.)
3	MFMCA0033FCT
5	MFMCA0053FCT
10	MFMCA0103FCT
20	MFMCA0203FCT

Brake Cable * It doesn't correspond to IP65 and IP67.

Part No.	MFMCB0 ∗ ∗ 0GET	80 mm sq. or less Applicable model	MSMF 50 W to 1000 W, MQMF 100 W to 400 W MHMF 50 W to 1000 W (Leadwire type)

[Unit: mm]

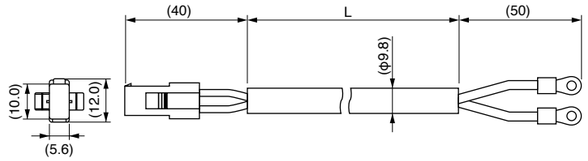

Title	Part No.	Manufacturer	L (m)	Part No.(ex.)
Connector	172157-1	Tyco Electronics Japan G.K.	3	MFMCB0030GET
Connector pin	170366-1, 170362-1		5	MFMCB0050GET
Nylon insulated round terminal	N1.25-M4	J.S.T Mfg. Co., Ltd.	10	MFMCB0100GET
Cable	ROBO-TOP 600V 0.75 mm² 2-wire	DYDEN CORPORATION	20	MFMCB0200GET

Part No.		80 mm sq. or less Applicable model	
	MFMCB0 ∗ ∗ 0PJT (Highly bendable type, Direction of motor shaft)		MSMF 50 W to 1000 W (Connector type)
	MFMCB0 ∗ ∗ 0PKT (Highly bendable type, Opposite direction of motor shaft)		
	MFMCB0 ∗ ∗ 0SJT (Standard bendable type, Direction of motor shaft)		
	MFMCB0 ∗ ∗ 0SKT (Standard bendable type, Opposite direction of motor shaft)		

[Unit: mm]

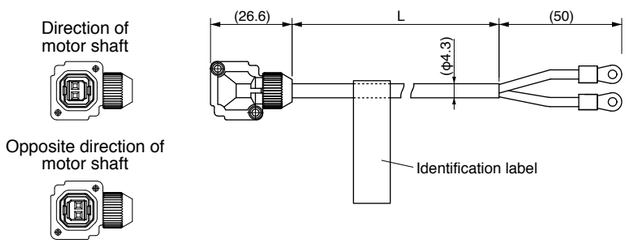

Title	Part No.	Manufacturer	L (m)	Part No.(ex.)
Connector	JN4FT02SJMR	Japan Aviation Electronics Ind.	3	MFMCB0030PJT
Connector pin	ST-TMH-S-C1B-3500		5	MFMCB0050PJT
Nylon insulated round terminal	N1.25-M4	J.S.T Mfg. Co., Ltd.	10	MFMCB0100PJT
Cable	AWG22 2-wire (φ4.3)	Hitachi Cable, Ltd.	20	MFMCB0200PJT

Cable for Interface

Part No.	DV0P4360

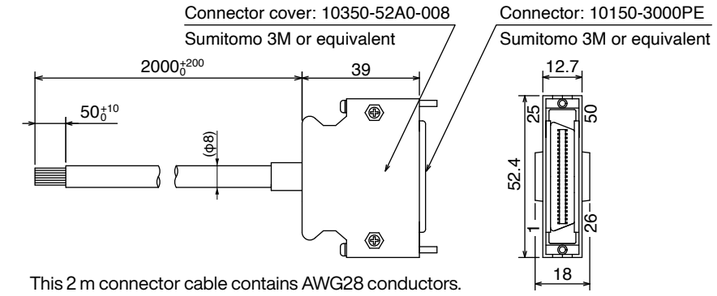

This 2 m connector cable contains AWG28 conductors.

[Unit: mm]

▪ Table for wiring

Pin No.	color	Pin No.	color	Pin No.	color	Pin No.	color	Pin No.	color
1	Orange (Red1)	11	Orange (Black2)	21	Orange (Red3)	31	Orange (Red4)	41	Orange (Red5)
2	Orange (Black1)	12	Yellow (Black1)	22	Orange (Black3)	32	Orange (Black4)	42	Orange (Black5)
3	Gray (Red1)	13	Gray (Red2)	23	Gray (Red3)	33	Gray (Red4)	43	Gray (Red5)
4	Gray (Black1)	14	Gray (Black2)	24	Gray (Black3)	34	White (Red4)	44	White (Red5)
5	White (Red1)	15	White (Red2)	25	White (Red3)	35	White (Black4)	45	White (Black5)
6	White (Black1)	16	Yellow (Red2)	26	White (Black3)	36	Yellow (Red4)	46	Yellow (Red5)
7	Yellow (Red1)	17	Yel (Blk2)/Pink (Blk2)	27	Yellow (Red3)	37	Yellow (Black4)	47	Yellow (Black5)
8	Pink (Red1)	18	Pink (Red2)	28	Yellow (Black3)	38	Pink (Red4)	48	Pink (Red5)
9	Pink (Black1)	19	White (Black2)	29	Pink (Red3)	39	Pink (Black4)	49	Pink (Black5)
10	Orange (Red2)	20	–	30	Pink (Black3)	40	Gray (Black4)	50	Gray (Black5)

<Remarks>
Color designation of the cable
e.g.) Pin-1
Cable color : Orange
(Red1) : One red dot on the cable

<Caution>
Cable pin No. 50 is not connected to the connector shell (housing) or shielded wire (net wire).
Pin No. 50 of the Driver is connected to the shell (housing) of the connector.
The shielded wire (net wire) of the cable is connected to the shell (housing) of the connector of the cable, and by connecting the connector of the optional cable to the Driver, pin No. 50 of the cable and the shielded wire (net wire) of the cable gets connected via the Driver.

Interface Conversion Cable

Part No.	DV0P4120, 4121, 4130, 4131, 4132

Interface cables for old product (XX series or V series) can be connected to the current product by using the connector conversion cable shown below.

DV0P4120	MINAS XX → A6 series (A5Ⅱ, A5, A4, A series) for position control/ velocity control
DV0P4121	MINAS XX → A6 series (A5Ⅱ, A5, A4, A series) for torque control
DV0P4130	MINAS V → A6 series (A5Ⅱ, A5, A4, A series) for position control
DV0P4131	MINAS V → A6 series (A5Ⅱ, A5, A4, A series) for velocity control
DV0P4132	MINAS V → A6 series (A5Ⅱ, A5, A4, A series) for torque control

* For details of wiring, contact our sales department.

Converts 36-pin configuration to 50-pin.

[Unit: mm]

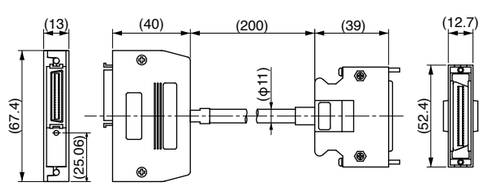

<DV0P4120, 4121>

[Unit: mm]

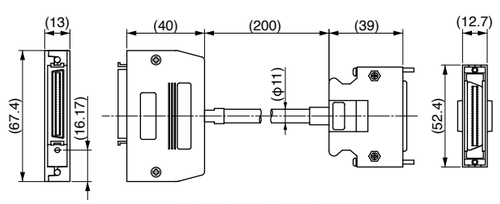

<DV0P4130, 4131, 4132>

Connector Kit for Communication Cable (for RS485, RS232) (Excluding A6SE, A6NE, A6BE Series)

Part No.	DV0PM20102

• Components

Title	Part No.	Manufacturer	Note
Connector	CIF-PCNS08KK-072R	J.S.T Mfg. Co., Ltd.	For Connector X2 (8-pins)

▪ Pin disposition of connector, connector X2

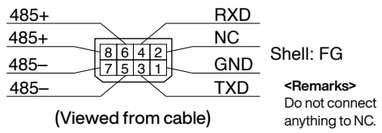

▪ Dimensions [Unit: mm]

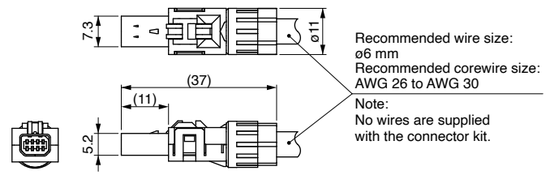

Connector Kit for Safety (Excluding A6SE, A6SG, A6NE, A6BE Series)

Part No.	DV0PM20103

• Components

Title	Part No.	Manufacturer	Note
Connector	CIF-PCNS08KK-071R	J.S.T Mfg. Co., Ltd.	For Connector X3 (8-pins)

▪ Pin disposition of connector, connector X3

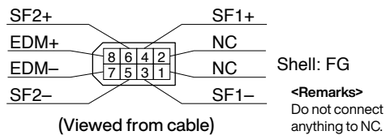

▪ Dimensions [Unit: mm]

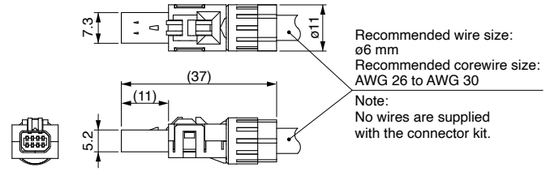

Safety bypass plug (Excluding A6SE, A6SG, A6NE, A6BE Series)

Part No.	DV0PM20094

• Components

Title	Part No.	Manufacturer	Note
Connector	CIF-PB08AK-GF1R	J.S.T Mfg. Co., Ltd.	For Connector X3

▪ Internal wiring
(Wiring of the following has been applied inside the plug.)

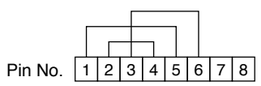

▪ Dimensions (Resin color : black) [Unit: mm]

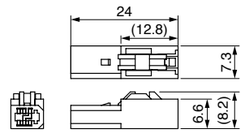

<Remarks>
- For the crimping tools required for cable production, please check the manufacturer's website or contact the manufacturer. For manufacturer inquiries, refer to P.347 "Peripheral Device Manufacturers List".

Connector Kit for Interface

Part No.	DV0P4350

• Components

Title	Part No.	Number	Manufacturer	Note
Connector	10150-3000PE	1	Sumitomo 3M (or equivalent)	For Connector X4 (50-pins)
Connector cover	10350-52A0-008	1		

▪ Pin disposition (50 pins) (viewed from the soldering side)

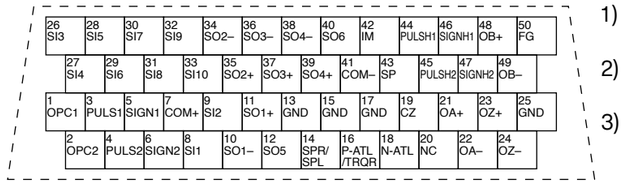

1) Check the stamped pin-No. on the connector body while making a wiring.
2) For the function of each signal title or its symbol, refer to the operating manual.
3) Do not connect anything to NC pins in the above table.

Connector Kit for External Scale (Excluding A6SE, A6SG, A6NE, A6BE Series)

Part No.	DV0PM20026

• Components

Title	Part No.	Manufacturer	Note
Connector	MUF-PK10K-X	J.S.T Mfg. Co., Ltd.	For Connector X5 (10-pins)

▪ Pin disposition of connector, connector X5

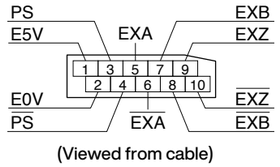

▪ Dimensions [Unit: mm]

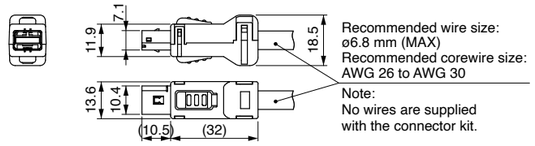

Connector Kit for Encoder

Part No.	DV0PM20010

• Components

Title	Part No.	Manufacturer	Note
Connector (Driver side)	3E206-0100 KV	Sumitomo 3M (or equivalent)	For Connector X6
Shell kit	3E306-3200-008		

▪ Pin disposition of connector, connector X6

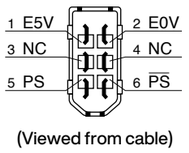

▪ Dimensions [Unit: mm]

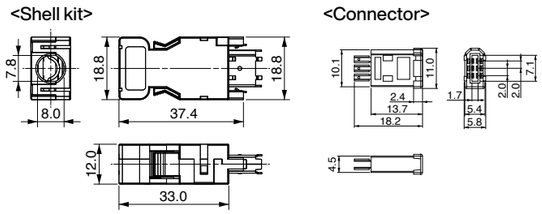

<Remarks>
Connector X1: use with commercially available cable.

• Configuration of connector X1: USB mini-B

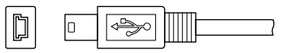

Connector Kit for Power Supply Input

Part No. **DV0PM20032** (For A-frame to D-frame: Single row type)

● Please refer to the Dimensions of driver P.57 for connector XA.

• **Components**

Title	Part No.	Number	Manufacturer	Note
Connector	05JFAT-SAX-GGKK-A	1	J.S.T Mfg. Co., Ltd.	For Connector XA
Handle lever	J-FAT-OT	2		

Part No. **DV0PM20033** (For A-frame to D-frame: Double row type)

• **Components**

Title	Part No.	Number	Manufacturer	Note
Connector	05JFAT-SAXGSA-C	1	J.S.T Mfg. Co., Ltd.	For Connector XA
Handle lever	J-FAT-OT	2		

▪ Dimensions

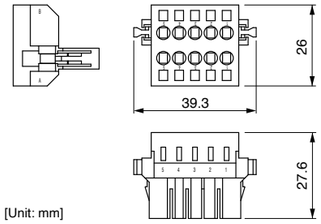

[Unit: mm]

* When connection multiple axes in series, make sure the sum of the current value does not exceed the rated current (11.25 A) of DV0PM20033.

Driver part No.	Power supply	Rated input current
MADL＊01＊＊	Single phase 100 V	1.7 A
MADL＊11＊＊	Single phase 100 V	2.0 A
MADL＊05＊＊	Single phase/3-phase 200 V	1.6 A/0.9 A
MADL＊15＊＊	Single phase/3-phase 200 V	2.0 A/1.1 A
MBDL＊21＊＊	Single phase 100 V	4.5 A
MBDL＊25＊＊	Single phase/3-phase 200 V	3.7 A/2.1 A
MCDL＊31＊＊	Single phase 100 V	7.0 A
MCDL＊35＊＊	Single phase/3-phase 200 V	6.4 A/3.4 A
MDDL＊45＊＊	Single phase/3-phase 200 V	7.9 A/4.6 A
MDDL＊55＊＊	Single phase/3-phase 200 V	13.6 A/7.2 A

Remarks

When using drivers MDDL＊55＊＊ in single-phase power supply, do not use DV0PM20033.

Part No. **DV0PM20044** (For E-frame)

• **Components**

Title	Part No.	Number	Manufacturer	Note
Connector	05JFAT-SAXGSA-L	1	J.S.T Mfg. Co., Ltd.	For Connector XA
Handle lever	J-FAT-OT-L	2		

Connector Kit for Regenerative Resistor Connection

Part No. **DV0PM20045** (For E-frame)

• **Components**

Title	Part No.	Number	Manufacturer	Note
Connector	04JFAT-SAXGSA-L	1	J.S.T Mfg. Co., Ltd.	200 V: For Connector XC * Jumper wire is included.
Handle lever	J-FAT-OT-L	2		

<Remarks>

- For the crimping tools required for cable production, please check the manufacturer's website or contact the manufacturer. For manufacturer inquiries, refer to P.347 "Peripheral Device Manufacturers List".

Connector Kit for Motor Connection (Driver side)

Part No. **DV0PM20034** (For A-frame to D-frame)

● Please refer to the Dimensions of driver P.57 for connector XB.

• **Components**

Title	Part No.	Number	Manufacturer	Note
Connector	06JFAT-SAX-GGKK-A	1	J.S.T Mfg. Co., Ltd.	For Connector XB * Jumper wire is included.
Handle lever	J-FAT-OT	2		

Part No. **DV0PM20046** (For E-frame)

● Please refer to the Dimensions of driver P.59 for connector XB.

• **Components**

Title	Part No.	Number	Manufacturer	Note
Connector	03JFAT-SAXGSA-L	1	J.S.T Mfg. Co., Ltd.	For Connector XB
Handle lever	J-FAT-OT-L	2		

Connector Kit for Motor/Encoder Connection

* When IP65 or IP67 are necessary, the customer must give appropriate processing.

Part No.	DV0P4290	80 mm sq. or less Applicable model	MSMF 50 W to 1000 W *, MQMF 100 W to 400 W MHMF 50 W to 1000 W * (Leadwire type IP65)

* MSMF092□1□2, MHMF092□1□□

• **Components**

Title	Part No.	Number	Manufacturer	Note
Connector (Driver side)	3E206-0100 KV	1	Sumitomo 3M (or equivalent)	For Connector X6 (6-pins)
Shell kit	3E306-3200-008	1		
Connector	172161-1	1	Tyco Electronics Japan G.K.	For Encoder cable (9-pins)
Connector pin	170365-1	9		
Connector	172159-1	1	Tyco Electronics Japan G.K.	For Motor cable (4-pins)
Connector pin	170366-1	4		

▪ Pin disposition of connector, connector X6

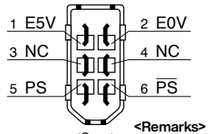

<Remarks>
Do not connect anything to NC.

(Viewed from cable)

▪ Pin disposition of connector for encoder cable

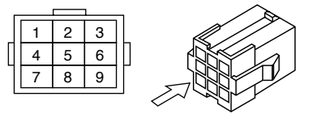

* Connector pin diagram is viewed from the direction of the arrow.

PIN No.	Application
1	BAT+*
2	BAT–*
3	FG(SHIELD)
4	PS
5	$\overline{PS}$
6	NC
7	E5V
8	E0V
9	NC

* When using the motor as an incremental system, BAT+ and BAT– can be left unconnected.

<Remarks>
Do not connect anything to NC.

▪ Pin disposition of connector for motor cable

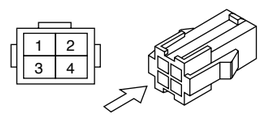

* Connector pin diagram is viewed from the direction of the arrow.

PIN No.	Application
1	U-phase
2	V-phase
3	W-phase
4	Ground

* When you connect the battery for absolute encoder, refer to P.338, "When you make your own cable for 23-bit absolute encoder"

<Remarks>

- For the crimping tools required for cable production, please check the manufacturer's website or contact the manufacturer. For manufacturer inquiries, refer to P.347 "Peripheral Device Manufacturers List".

Connector Kit for Motor/Encoder Connection

Part No.	DV0PM20035	80 mm sq. or less Applicable model	MSMF 50 W to 1000 W * (Connector type IP67)

* MSMF092L1□1

• Components

Title	Part No.	Number	Manufacturer	Note
Connector (Driver side)	3E206-0100 KV	1	Sumitomo 3M (or equivalent)	For Connector X6 (6-pins)
Shell kit	3E306-3200-008	1		
Encoder connector	JN6FR07SM1	1	Japan Aviation Electronics Ind.	For Encoder cable (7-pins)
Socket contact	LY10-C1-A1-10000	7		
Motor connector	JN8FT04SJ1	1	Japan Aviation Electronics Ind.	For Motor cable (4-pins)
Socket contact	ST-TMH-S-C1B-3500	4		

▪ Pin disposition of connector connector X6

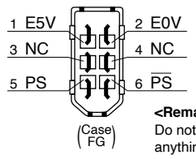

<Remarks>
Do not connect anything to NC.

(Viewed from cable)

<Remarks>
Secure the gasket in place without removing it from the connector. Otherwise, the degree of protection of IP67 will not be guaranteed.

▪ Pin disposition of connector for encoder cable

[Direction of motor shaft]

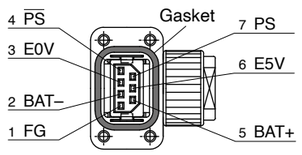

[Opposite direction of motor shaft]

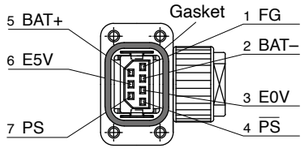

* Pins 2 and 5 are left unused (NC) when used in incremental system.

▪ Pin disposition of connector for motor cable

[Direction of motor shaft]

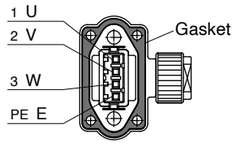

[Opposite direction of motor shaft]

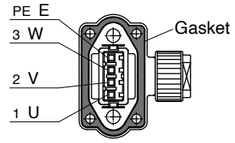

<Remarks>
- For the crimping tools required for cable production, please check the manufacturer's website or contact the manufacturer. For manufacturer inquiries, refer to P.347 "Peripheral Device Manufacturers List".

Part No.	DV0PM24581	80 mm sq. or less Applicable model	MHMF 50 W, 100 W (Connector type IP67)	with/without brake common use

• Components

Title	Part No.	Number	Manufacturer	Note
Connector (Driver side)	3E206-0100 KV	1	Sumitomo 3M (or equivalent)	For Connector X6 (6-pins)
Shell kit	3E306-3200-008	1		
Encoder connector	JN6FR07SM1	1	Japan Aviation Electronics Ind.	For Encoder cable (7-pins)
Socket contact	LY10-C1-A1-10000	7		
Motor connector	JN11FH06SN2	1	Japan Aviation Electronics Ind.	For Motor cable (6-pins)
Socket contact	JN11S10K4A1	6		

▪ Pin disposition of connector connector X6

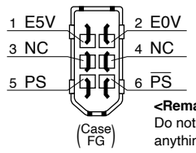

<Remarks>
Do not connect anything to NC.

(Viewed from cable)

<Remarks>
Secure the gasket in place without removing it from the connector. Otherwise, the degree of protection of IP67 will not be guaranteed.

▪ Pin disposition of connector for encoder cable

[Direction of motor shaft]

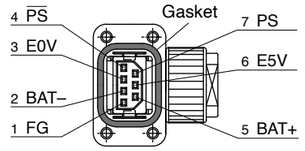

[Opposite direction of motor shaft]

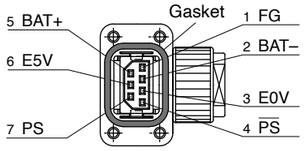

* Pins 2 and 5 are left unused (NC) when used in incremental system.

▪ Pin disposition of connector for motor cable

[Direction of motor shaft]

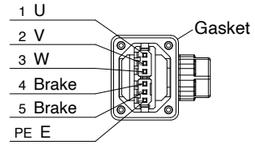

[Opposite direction of motor shaft]

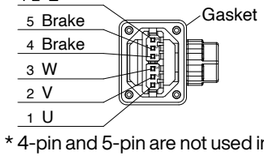

* 4-pin and 5-pin are not used in case of no brake.

Part No.	DV0PM24582	80 mm sq. or less Applicable model	MQMF 100 W to 400 W, MHMF 200 W to 1000 W (Connector type IP67)	with/without brake common use

• Components

Title	Part No.	Number	Manufacturer	Note
Connector (Driver side)	3E206-0100 KV	1	Sumitomo 3M (or equivalent)	For Connector X6 (6-pins)
Shell kit	3E306-3200-008	1		
Encoder connector	JN6FR07SM1	1	Japan Aviation Electronics Ind.	For Encoder cable (7-pins)
Socket contact	LY10-C1-A1-10000	7		
Motor connector	JN11FH06SN1	1	Japan Aviation Electronics Ind.	For Motor cable (6-pins)
Socket contact	JN11S35H3A1	6		

▪ Pin disposition of connector connector X6

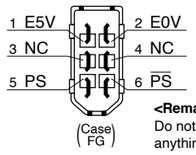

<Remarks>
Do not connect anything to NC.

(Viewed from cable)

<Remarks>
Secure the gasket in place without removing it from the connector. Otherwise, the degree of protection of IP67 will not be guaranteed.

▪ Pin disposition of connector for encoder cable

[Direction of motor shaft]

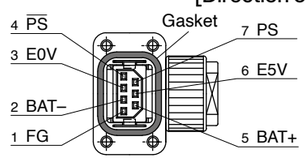

[Opposite direction of motor shaft]

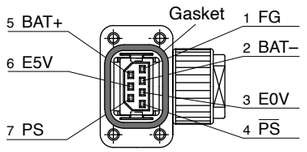

* Pins 2 and 5 are left unused (NC) when used in incremental system.

▪ Pin disposition of connector for motor cable

[Direction of motor shaft]

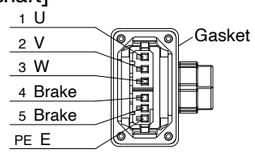

[Opposite direction of motor shaft]

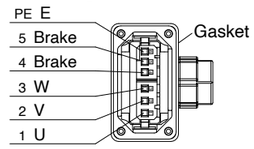

* 4-pin and 5-pin are not used in case of no brake.

Connector Kit for Motor/Encoder Connection

* When IP65 or IP67 are necessary, the customer must give appropriate processing.

Part No.	DV0PM24583	100 mm sq. or more Applicable model	(IP67 motor) Encoder JN2 <Small size connector> MSMF 1.0 kW * to 2.0 kW, MDMF 1.0 kW to 2.0 kW MHMF 1.0 kW *, 1.5 kW, MGMF 0.85 kW to 1.8 kW	Without brake

* MSMF102□1□□, MHMF102□1□□

• Components

Title	Part No.	Number	Manufacturer	Note
Connector (Driver side)	3E206-0100 KV	1	Sumitomo 3M (or equivalent)	For Connector X6 (6-pins)
Shell kit	3E306-3200-008	1		
Encoder connector	JN2DS10SL1-R	1	Japan Aviation Electronics Ind.	For Encoder cable (One-touch lock type)
Connector pin	JN1-22-22S-PKG100	5		
Motor connector	JL10-6A20-4SE-EB	1	Japan Aviation Electronics Ind.	For Motor cable (One-touch lock type)
Cable clamp	JL04-2022CK(14)-R	1		

Part No.	DV0PM24585	100 mm sq. or more Applicable model	(IP67 motor) Encoder JN2 <Small size connector> MSMF 1.0 kW * to 2.0 kW, MDMF 1.0 kW to 2.0 kW MHMF 1.0 kW *, 1.5 kW, MGMF 0.85 kW to 1.8 kW	With brake

* MSMF102□1□□, MHMF102□1□□

• Components

Title	Part No.	Number	Manufacturer	Note
Connector (Driver side)	3E206-0100 KV	1	Sumitomo 3M (or equivalent)	For Connector X6 (6-pins)
Shell kit	3E306-3200-008	1		
Encoder connector	JN2DS10SL1-R	1	Japan Aviation Electronics Ind.	For Encoder cable (One-touch lock type)
Connector pin	JN1-22-22S-PKG100	5		
Motor connector	JL10-6A20-18SE-EB	1	Japan Aviation Electronics Ind.	For Motor cable (One-touch lock type)
Cable clamp	JL04-2022CK(14)-R	1		

Part No.	DV0PM24587	100 mm sq. or more Applicable model	(IP67 motor) Encoder JL10 <Large size connector> MSMF 1.0 kW * to 2.0 kW, MDMF 1.0 kW to 2.0 kW MHMF 1.0 kW *, 1.5 kW, MGMF 0.85 kW to 1.8 kW	Without brake

* MSMF102L1□□, MHMF102L1□□

• Components

Title	Part No.	Number	Manufacturer	Note
Connector (Driver side)	3E206-0100 KV	1	Sumitomo 3M (or equivalent)	For Connector X6 (6-pins)
Shell kit	3E306-3200-008	1		
Encoder connector	JL10-6A20-29S-EB	1	Japan Aviation Electronics Ind.	For Encoder cable (One-touch lock type)
Cable clamp	JL04-2022CK(09)-R	1		
Motor connector	JL10-6A20-4SE-EB	1	Japan Aviation Electronics Ind.	For Motor cable (One-touch lock type)
Cable clamp	JL04-2022CK(14)-R	1		

Part No.	DV0PM24589	100 mm sq. or more Applicable model	(IP67 motor) Encoder JL10 <Large size connector> MSMF 1.0 kW * to 2.0 kW, MDMF 1.0 kW to 2.0 kW MHMF 1.0 kW *, 1.5 kW, MGMF 0.85 kW to 1.8 kW	With brake

* MSMF102L1□□, MHMF102L1□□

• Components

Title	Part No.	Number	Manufacturer	Note
Connector (Driver side)	3E206-0100 KV	1	Sumitomo 3M (or equivalent)	For Connector X6 (6-pins)
Shell kit	3E306-3200-008	1		
Encoder connector	JL10-6A20-29S-EB	1	Japan Aviation Electronics Ind.	For Encoder cable (One-touch lock type)
Cable clamp	JL04-2022CK(09)-R	1		
Motor connector	JL10-6A20-18SE-EB	1	Japan Aviation Electronics Ind.	For Motor cable (One-touch lock type)
Cable clamp	JL04-2022CK(14)-R	1		

<Remarks>

- For the crimping tools required for cable production, please check the manufacturer's website or contact the manufacturer. For manufacturer inquiries, refer to P.347 "Peripheral Device Manufacturers List".

Part No.	DV0PM24584	100 mm sq. or more Applicable model	(IP67 motor) Encoder JN2 <Small size connector> MSMF 3.0 kW to 5.0 kW, MDMF 3.0 kW to 5.0 kW MHMF 2.0 kW to 5.0 kW, MGMF 2.4 kW to 4.4 kW	Without brake

• Components

Title	Part No.	Number	Manufacturer	Note
Connector (Driver side)	3E206-0100 KV	1	Sumitomo 3M (or equivalent)	For Connector X6 (6-pins)
Shell kit	3E306-3200-008	1		
Encoder connector	JN2DS10SL1-R	1	Japan Aviation Electronics Ind.	For Encoder cable (One-touch lock type)
Connector pin	JN1-22-22S-PKG100	5		
Motor connector	JL10-6A22-22SE-EB	1	Japan Aviation Electronics Ind.	For Motor cable (One-touch lock type)
Cable clamp	JL04-2022CK(14)-R	1		

Part No.	DV0PM24586	100 mm sq. or more Applicable model	(IP67 motor) Encoder JN2 <Small size connector> MSMF 3.0 kW to 5.0 kW, MDMF 3.0 kW to 5.0 kW MHMF 2.0 kW to 5.0 kW, MGMF 2.4 kW to 4.4 kW	With brake

• Components

Title	Part No.	Number	Manufacturer	Note
Connector (Driver side)	3E206-0100 KV	1	Sumitomo 3M (or equivalent)	For Connector X6 (6-pins)
Shell kit	3E306-3200-008	1		
Encoder connector	JN2DS10SL1-R	1	Japan Aviation Electronics Ind.	For Encoder cable (One-touch lock type)
Connector pin	JN1-22-22S-PKG100	5		
Motor connector	JL10-6A24-11SE-EB	1	Japan Aviation Electronics Ind.	For Motor cable (One-touch lock type)
Cable clamp	JL04-2428CK(17)-R	1		

Part No.	DV0PM24588	100 mm sq. or more Applicable model	(IP67 motor) Encoder JL10 <Large size connector> MSMF 3.0 kW to 5.0 kW, MDMF 3.0 kW to 5.0 kW MHMF 2.0 kW to 5.0 kW, MGMF 2.4 kW to 4.4 kW	Without brake

• Components

Title	Part No.	Number	Manufacturer	Note
Connector (Driver side)	3E206-0100 KV	1	Sumitomo 3M (or equivalent)	For Connector X6 (6-pins)
Shell kit	3E306-3200-008	1		
Encoder connector	JL10-6A20-29S-EB	1	Japan Aviation Electronics Ind.	For Encoder cable (One-touch lock type)
Cable clamp	JL04-2022CK(09)-R	1		
Motor connector	JL10-6A22-22SE-EB	1	Japan Aviation Electronics Ind.	For Motor cable (One-touch lock type)
Cable clamp	JL04-2022CK(14)-R	1		

Part No.	DV0PM24590	100 mm sq. or more Applicable model	(IP67 motor) Encoder JL10 <Large size connector> MSMF 3.0 kW to 5.0 kW, MDMF 3.0 kW to 5.0 kW MHMF 2.0 kW to 5.0 kW, MGMF 2.4 kW to 4.4 kW	With brake

• Components

Title	Part No.	Number	Manufacturer	Note
Connector (Driver side)	3E206-0100 KV	1	Sumitomo 3M (or equivalent)	For Connector X6 (6-pins)
Shell kit	3E306-3200-008	1		
Encoder connector	JL10-6A20-29S-EB	1	Japan Aviation Electronics Ind.	For Encoder cable (One-touch lock type)
Cable clamp	JL04-2022CK(09)-R	1		
Motor connector	JL10-6A24-11SE-EB	1	Japan Aviation Electronics Ind.	For Motor cable (One-touch lock type)
Cable clamp	JL04-2428CK(17)-R	1		

<Remarks>

- For the crimping tools required for cable production, please check the manufacturer's website or contact the manufacturer. For manufacturer inquiries, refer to P.347 "Peripheral Device Manufacturers List".

Connector Kit for Motor/Encoder Connection

* When IP65 or IP67 are necessary, the customer must give appropriate processing.

Part No.	DV0PM20036	100 mm sq. or more Applicable model	(IP67 motor) Encoder JN2 <Small size connector> MSMF 1.0 kW * to 2.0 kW, MDMF 1.0 kW to 2.0 kW MHMF 1.0 kW *, 1.5 kW, MGMF 0.85 kW to 1.8 kW	Without brake

* MSMF102□1□□, MHMF102□1□□

• Components

Title	Part No.	Number	Manufacturer	Note
Connector (Driver side)	3E206-0100 KV	1	Sumitomo 3M (or equivalent)	For Connector X6 (6-pins)
Shell kit	3E306-3200-008	1		
Encoder connector	JN2DS10SL1-R	1	Japan Aviation Electronics Ind.	For Encoder cable (One-touch lock type)
Connector pin	JN1-22-22S-PKG100	5		
Motor connector	JL04V-6A20-4SE-EB-RK	1	Japan Aviation Electronics Ind.	For Motor cable (Screwed type)
Cable clamp	JL04-2022CK(14)-R	1		

Part No.	DV0PM20038	100 mm sq. or more Applicable model	(IP67 motor) Encoder JN2 <Small size connector> MSMF 1.0 kW * to 2.0 kW, MDMF 1.0 kW to 2.0 kW MHMF 1.0 kW *, 1.5 kW, MGMF 0.85 kW to 1.8 kW	With brake

* MSMF102□1□□, MHMF102□1□□

• Components

Title	Part No.	Number	Manufacturer	Note
Connector (Driver side)	3E206-0100 KV	1	Sumitomo 3M (or equivalent)	For Connector X6 (6-pins)
Shell kit	3E306-3200-008	1		
Encoder connector	JN2DS10SL1-R	1	Japan Aviation Electronics Ind.	For Encoder cable (One-touch lock type)
Connector pin	JN1-22-22S-PKG100	5		
Motor connector	JL04V-6A20-18SE-EB-RK	1	Japan Aviation Electronics Ind.	For Motor cable (Screwed type)
Cable clamp	JL04-2022CK(14)-R	1		

Part No.	DV0P4310	100 mm sq. or more Applicable model	(IP67 motor) Encoder JL10 <Large size connector> MSMF 1.0 kW * to 2.0 kW, MDMF 1.0 kW to 2.0 kW MHMF 1.0 kW *, 1.5 kW, MGMF 0.85 kW to 1.8 kW	Without brake

* MSMF102L1□□, MHMF102L1□□

• Components

Title	Part No.	Number	Manufacturer	Note
Connector (Driver side)	3E206-0100 KV	1	Sumitomo 3M (or equivalent)	For Connector X6 (6-pins)
Shell kit	3E306-3200-008	1		
Encoder connector	N/MS3106B20-29S	1	Japan Aviation Electronics Ind.	For Encoder cable (Screwed type)
Cable clamp	N/MS3057-12A	1		
Motor connector	N/MS3106B20-4S	1	Japan Aviation Electronics Ind.	For Motor cable (Screwed type)
Cable clamp	N/MS3057-12A	1		

Part No.	DV0P4330	100 mm sq. or more Applicable model	(IP67 motor) Encoder JL10 <Large size connector> MSMF 1.0 kW * to 2.0 kW, MDMF 1.0 kW to 2.0 kW MHMF 1.0 kW *, 1.5 kW, MGMF 0.85 kW to 1.8 kW	With brake

* MSMF102L1□□, MHMF102L1□□

• Components

Title	Part No.	Number	Manufacturer	Note
Connector (Driver side)	3E206-0100 KV	1	Sumitomo 3M (or equivalent)	For Connector X6 (6-pins)
Shell kit	3E306-3200-008	1		
Encoder connector	N/MS3106B20-29S	1	Japan Aviation Electronics Ind.	For Encoder cable (Screwed type)
Cable clamp	N/MS3057-12A	1		
Motor connector	N/MS3106B20-18S	1	Japan Aviation Electronics Ind.	For Motor cable (Screwed type)
Cable clamp	N/MS3057-12A	1		

<Remarks>

- For the crimping tools required for cable production, please check the manufacturer's website or contact the manufacturer. For manufacturer inquiries, refer to P.347 "Peripheral Device Manufacturers List".

Part No.	DV0PM20037	100 mm sq. or more Applicable model	(IP67 motor) Encoder JN2 <Small size connector> MSMF 3.0 kW to 5.0 kW, MDMF 3.0 kW to 5.0 kW MHMF 2.0 kW to 5.0 kW, MGMF 2.4 kW to 4.4 kW	Without brake

• Components

Title	Part No.	Number	Manufacturer	Note
Connector (Driver side)	3E206-0100 KV	1	Sumitomo 3M (or equivalent)	For Connector X6 (6-pins)
Shell kit	3E306-3200-008	1		
Encoder connector	JN2DS10SL1-R	1	Japan Aviation Electronics Ind.	For Encoder cable (One-touch lock type)
Connector pin	JN1-22-22S-PKG100	5		
Motor connector	JL04V-6A22-22SE-EB-R	1	Japan Aviation Electronics Ind.	For Motor cable (Screwed type)
Cable clamp	JL04-2022CK(14)-R	1		

Part No.	DV0PM20039	100 mm sq. or more Applicable model	(IP67 motor) Encoder JN2 <Small size connector> MSMF 3.0 kW to 5.0 kW, MDMF 3.0 kW to 5.0 kW MHMF 2.0 kW to 5.0 kW, MGMF 2.4 kW to 4.4 kW	With brake

• Components

Title	Part No.	Number	Manufacturer	Note
Connector (Driver side)	3E206-0100 KV	1	Sumitomo 3M (or equivalent)	For Connector X6 (6-pins)
Shell kit	3E306-3200-008	1		
Encoder connector	JN2DS10SL1-R	1	Japan Aviation Electronics Ind.	For Encoder cable (One-touch lock type)
Connector pin	JN1-22-22S-PKG100	5		
Motor connector	JL04V-6A24-11SE-EB-R	1	Japan Aviation Electronics Ind.	For Motor cable (Screwed type)
Cable clamp	JL04-2428CK(17)-R	1		

Part No.	DV0P4320	100 mm sq. or more Applicable model	(IP67 motor) Encoder JL10 <Large size connector> MSMF 3.0 kW to 5.0 kW, MDMF 3.0 kW to 5.0 kW MHMF 2.0 kW to 5.0 kW, MGMF 2.4 kW to 4.4 kW	Without brake

• Components

Title	Part No.	Number	Manufacturer	Note
Connector (Driver side)	3E206-0100 KV	1	Sumitomo 3M (or equivalent)	For Connector X6 (6-pins)
Shell kit	3E306-3200-008	1		
Encoder connector	N/MS3106B20-29S	1	Japan Aviation Electronics Ind.	For Encoder cable (Screwed type)
Cable clamp	N/MS3057-12A	1		
Motor connector	N/MS3106B22-22S	1	Japan Aviation Electronics Ind.	For Motor cable (Screwed type)
Cable clamp	N/MS3057-12A	1		

Part No.	DV0P4340	100 mm sq. or more Applicable model	(IP67 motor) Encoder JL10 <Large size connector> MSMF 3.0 kW to 5.0 kW, MDMF 3.0 kW to 5.0 kW MHMF 2.0 kW to 5.0 kW, MGMF 2.4 kW to 4.4 kW	With brake

• Components

Title	Part No.	Number	Manufacturer	Note
Connector (Driver side)	3E206-0100 KV	1	Sumitomo 3M (or equivalent)	For Connector X6 (6-pins)
Shell kit	3E306-3200-008	1		
Encoder connector	N/MS3106B20-29S	1	Japan Aviation Electronics Ind.	For Encoder cable (Screwed type)
Cable clamp	N/MS3057-12A	1		
Motor connector	N/MS3106B24-11S	1	Japan Aviation Electronics Ind.	For Motor cable (Screwed type)
Cable clamp	N/MS3057-16A	1		

<Remarks>

- For the crimping tools required for cable production, please check the manufacturer's website or contact the manufacturer. For manufacturer inquiries, refer to P.347 "Peripheral Device Manufacturers List".

Connector Kit for Motor/Encoder Connection

* When IP65 or IP67 are necessary, the customer must give appropriate processing.

Part No.	DV0PM20107	100 mm sq. or more Applicable model	(IP67 motor) Encoder JL10 <Large size connector> MDMF 7.5 kW to 15.0 kW MGMF 5.5 kW, MHMF 7.5 kW	Without brake

• Components

Title	Part No.	Number	Manufacturer	Note
Connector (Driver side)	3E206-0100KV	1	Sumitomo 3M (or equivalent)	For Connector X6 (6-pins)
Shell kit	3E306-3200-008	1		
Encoder connector	JL10-6A20-29S-EB	1	Japan Aviation Electronics Ind.	For Encoder cable (One-touch lock type)
Cable clamp	JL04-2022CK(09)-R	1		
Motor connector	JL04V-6A32-17SE-EB-RK	1	Japan Aviation Electronics Ind.	For Motor cable (Screwed type)
Cable clamp	JL04-32CK(24)-RK *1	1		

*1 Casing size: ϕ 22 to ϕ 25. There is no specified cable wire material. Prepare a wire according to the connector used by the customer.

Part No.	DV0PM20108	100 mm sq. or more Applicable model	(IP67 motor) Encoder JL10 <Large size connector> MDMF 7.5 kW to 15.0 kW MGMF 5.5 kW, MHMF 7.5 kW	With brake

• Components

Title	Part No.	Number	Manufacturer	Note
Connector (Driver side)	3E206-0100KV	1	Sumitomo 3M (or equivalent)	For Connector X6 (6-pins)
Shell kit	3E306-3200-008	1		
Encoder connector	JL10-6A20-29S-EB	1	Japan Aviation Electronics Ind.	For Encoder cable (One-touch lock type)
Cable clamp	JL04-2022CK(09)-R	1		
Motor connector	JL04V-6A32-17SE-EB-RK	1	Japan Aviation Electronics Ind.	For Motor cable (Screwed type)
Cable clamp	JL04-32CK(24)-RK *1	1		
Brake connector	N/MS3106B14S-2S	1	Japan Aviation Electronics Ind.	For Brake cable (Screwed type)
Cable clamp	N/MS3057-6A	1		

*1 Casing size: ϕ 22 to ϕ 25. There is no specified cable wire material. Prepare a wire according to the connector used by the customer.

Part No.	DV0PM20111	100 mm sq. or more Applicable model	(IP67 motor) Encoder JL10 <Large size connector> MDMF 7.5 kW to 15.0 kW MGMF 5.5 kW, MHMF 7.5 kW	Without brake

• Components

Title	Part No.	Number	Manufacturer	Note
Connector (Driver side)	3E206-0100KV	1	Sumitomo 3M (or equivalent)	For Connector X6 (6-pins)
Shell kit	3E306-3200-008	1		
Encoder connector	N/MS3106B20-29S	1	Japan Aviation Electronics Ind.	For Encoder cable (Screwed type)
Cable clamp	N/MS3057-12A	1		
Motor connector	JL04V-6A32-17SE-EB-RK	1	Japan Aviation Electronics Ind.	For Motor cable (Screwed type)
Cable clamp	JL04-32CK(24)-RK *1	1		

*1 Casing size: ϕ 22 to ϕ 25. There is no specified cable wire material. Prepare a wire according to the connector used by the customer.

<Remarks>

- For the crimping tools required for cable production, please check the manufacturer's website or contact the manufacturer. For manufacturer inquiries, refer to P.347 "Peripheral Device Manufacturers List".

Part No.	DV0PM20112	100 mm sq. or more Applicable model	(IP67 motor) Encoder JL10 <Large size connector> MDMF 7.5 kW to 15.0 kW MGMF 5.5 kW, MHMF 7.5 kW	With brake

• Components

Title	Part No.	Number	Manufacturer	Note
Connector (Driver side)	3E206-0100KV	1	Sumitomo 3M (or equivalent)	For Connector X6 (6-pins)
Shell kit	3E306-3200-008	1		
Encoder connector	N/MS3106B20-29S	1	Japan Aviation Electronics Ind.	For Encoder cable (Screwed type)
Cable clamp	N/MS3057-12A	1		
Motor connector	JL04V-6A32-17SE-EB-RK	1	Japan Aviation Electronics Ind.	For Motor cable (Screwed type)
Cable clamp	JL04-32CK(24)-RK *1	1		
Brake connector	N/MS3106B14S-2S	1	Japan Aviation Electronics Ind.	For Brake cable (Screwed type)
Cable clamp	N/MS3057-6A	1		

*1 Casing size: ϕ 22 to ϕ 25. There is no specified cable wire material. Prepare a wire according to the connector used by the customer.

Part No.	DV0PM20056	100 mm sq. or more Applicable model	(IP67 motor) Encoder JN2 <Small size connector> MDMF 7.5 kW to 15.0 kW MGMF 5.5 kW, MHMF 7.5 kW	Without brake

• Components

Title	Part No.	Number	Manufacturer	Note
Connector (Driver side)	3E206-0100KV	1	Sumitomo 3M (or equivalent)	For Connector X6 (6-pins)
Shell kit	3E306-3200-008	1		
Encoder connector	JN2DS10SL1-R	1	Japan Aviation Electronics Ind.	For Encoder cable (One-touch lock type)
Connector pin	JN1-22-22S-PKG100	5		
Motor connector	JL04V-6A32-17SE-EB-RK	1	Japan Aviation Electronics Ind.	For Motor cable (Screwed type)
Cable clamp	JL04-32CK(24)-RK *1	1		

*1 Casing size: ϕ 22 to ϕ 25. There is no specified cable wire material. Prepare a wire according to the connector used by the customer.

Part No.	DV0PM20057	100 mm sq. or more Applicable model	(IP67 motor) Encoder JN2 <Small size connector> MDMF 7.5 kW to 15.0 kW MGMF 5.5 kW, MHMF 7.5 kW	With brake

• Components

Title	Part No.	Number	Manufacturer	Note
Connector (Driver side)	3E206-0100KV	1	Sumitomo 3M (or equivalent)	For Connector X6 (6-pins)
Shell kit	3E306-3200-008	1		
Encoder connector	JN2DS10SL1-R	1	Japan Aviation Electronics Ind.	For Encoder cable (One-touch lock type)
Connector pin	JN1-22-22S-PKG100	5		
Motor connector	JL04V-6A32-17SE-EB-RK	1	Japan Aviation Electronics Ind.	For Motor cable (Screwed type)
Cable clamp	JL04-32CK(24)-RK *1	1		
Brake connector	N/MS3106B14S-2S	1	Japan Aviation Electronics Ind.	For Brake cable (Screwed type)
Cable clamp	N/MS3057-6A	1		

*1 Casing size: ϕ 22 to ϕ 25. There is no specified cable wire material. Prepare a wire according to the connector used by the customer.

<Remarks>

- For the crimping tools required for cable production, please check the manufacturer's website or contact the manufacturer. For manufacturer inquiries, refer to P.347 "Peripheral Device Manufacturers List".

Connector Kit for Motor/Encoder Connection

* When IP44 is necessary, the customer must give appropriate processing.

Part No.	DV0PM20109	100 mm sq. or more Applicable model	(IP44 motor) Encoder JL10 <Large size connector> MDMF 22.0 kW	Without brake

• Components

Title	Part No.	Number	Manufacturer	Note
Connector (Driver side)	3E206-0100KV	1	Sumitomo 3M (or equivalent)	For Connector X6 (6-pins)
Shell kit	3E306-3200-008	1		
Encoder connector	JL10-6A20-29S-EB	1	Japan Aviation Electronics Ind.	For Encoder cable (One-touch lock type)
Cable clamp	JL04-2022CK(09)-R	1		

Part No.	DV0PM20110	100 mm sq. or more Applicable model	(IP44 motor) Encoder JL10 <Large size connector> MDMF 22.0 kW	With brake

• Components

Title	Part No.	Number	Manufacturer	Note
Connector (Driver side)	3E206-0100KV	1	Sumitomo 3M (or equivalent)	For Connector X6 (6-pins)
Shell kit	3E306-3200-008	1		
Encoder connector	JL10-6A20-29S-EB	1	Japan Aviation Electronics Ind.	For Encoder cable (One-touch lock type)
Cable clamp	JL04-2022CK(09)-R	1		
Brake connector	N/MS3106B14S-2S	1	Japan Aviation Electronics Ind.	For Brake cable (Screwed type)
Cable clamp	N/MS3057-6A	1		

Part No.	DV0PM20113	100 mm sq. or more Applicable model	(IP44 motor) Encoder JL10 <Large size connector> MDMF 22.0 kW	Without brake

• Components

Title	Part No.	Number	Manufacturer	Note
Connector (Driver side)	3E206-0100KV	1	Sumitomo 3M (or equivalent)	For Connector X6 (6-pins)
Shell kit	3E306-3200-008	1		
Encoder connector	N/MS3106B20-29S	1	Japan Aviation Electronics Ind.	For Encoder cable (Screwed type)
Cable clamp	N/MS3057-12A	1		

<Remarks>

- For the crimping tools required for cable production, please check the manufacturer's website or contact the manufacturer. For manufacturer inquiries, refer to P.347 "Peripheral Device Manufacturers List".

Part No.	DV0PM20114	100 mm sq. or more Applicable model	(IP44 motor) Encoder JL10 <Large size connector> MDMF 22.0 kW	With brake

• Components

Title	Part No.	Number	Manufacturer	Note
Connector (Driver side)	3E206-0100KV	1	Sumitomo 3M (or equivalent)	For Connector X6 (6-pins)
Shell kit	3E306-3200-008	1		
Encoder connector	N/MS3106B20-29S	1	Japan Aviation Electronics Ind.	For Encoder cable (Screwed type)
Cable clamp	N/MS3057-12A	1		
Brake connector	N/MS3106B14S-2S	1	Japan Aviation Electronics Ind.	For Brake cable (Screwed type)
Cable clamp	N/MS3057-6A	1		

Part No.	DV0PM20115	100 mm sq. or more Applicable model	(IP44 motor) Encoder JN2 <Small size connector> MDMF 22.0 kW	Without brake

• Components

Title	Part No.	Number	Manufacturer	Note
Connector (Driver side)	3E206-0100KV	1	Sumitomo 3M (or equivalent)	For Connector X6 (6-pins)
Shell kit	3E306-3200-008	1		
Encoder connector	JN2DS10SL1-R	1	Japan Aviation Electronics Ind.	For Encoder cable (One-touch lock type)
Connector pin	JN1-22-22S-PKG100	5		

Part No.	DV0PM20116	100 mm sq. or more Applicable model	(IP44 motor) Encoder JN2 <Small size connector> MDMF 22.0 kW	With brake

• Components

Title	Part No.	Number	Manufacturer	Note
Connector (Driver side)	3E206-0100KV	1	Sumitomo 3M (or equivalent)	For Connector X6 (6-pins)
Shell kit	3E306-3200-008	1		
Encoder connector	JN2DS10SL1-R	1	Japan Aviation Electronics Ind.	For Encoder cable (One-touch lock type)
Connector pin	JN1-22-22S-PKG100	5		
Brake connector	N/MS3106B14S-2S	1	Japan Aviation Electronics Ind.	For Brake cable (Screwed type)
Cable clamp	N/MS3057-6A	1		

* The motor / encoder connection connector kit for MDMF 22.0 kW does not include the connection parts for motor cable (terminal block). Please prepare a round terminal by yourself. (For details, see P.27)

<Remarks>

- For the crimping tools required for cable production, please check the manufacturer's website or contact the manufacturer. For manufacturer inquiries, refer to P.347 "Peripheral Device Manufacturers List".

* When IP65 or IP67 are necessary, the customer must give appropriate processing.

Connector Kit for Motor/Brake Connection

Part No.	DV0PM20040	80 mm sq. or less Applicable model	MSMF 50 W to 1000 W * (Connector type IP67)

* MSMF092L1□1

• Components

Title	Part No.	Number	Manufacturer	Note
Connector	JN4FT02SJM-R	1	Japan Aviation Electronics Ind.	For brake cable
Socket contact	ST-TMH-S-C1B-3500	2		

• Pin disposition of connector for brake cable

[Direction of motor shaft]

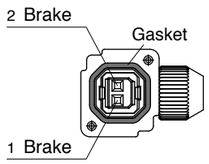

[Opposite direction of motor shaft]

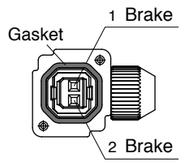

<Remarks>

Secure the gasket in place without removing it from the connector.
Otherwise, the degree of protection of IP67 will not be guaranteed.

Battery for Absolute Encoder

Part No.	DV0P2990

▪ Lithium battery: 3.6 V 2000 mAh

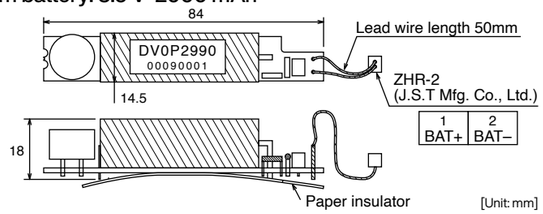

<Caution>

This battery is categorized as hazardous substance, and you may be required to present an application of hazardous substance when you transport by air (both passenger and cargo airlines).

Battery Box for Absolute Encoder *

* Battery is not included. Please buy the absolute encoder battery "DV0P2990" separately.

Part No.	DV0P4430

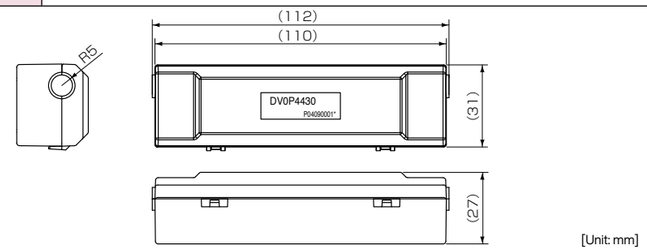

When waking a cable for 23-bit absolute encoder by yourself

When you make your own cable for 23-bit absolute encoder, connect the optional battery for absolute encoder, DV0P2990 as per the wiring diagram below. Connector of the battery for absolute encoder shall be provided by customer as well.

<Caution>

Install and fix the battery securely. If the installation and fixing of the battery is not appropriate, it may cause the wire breakdown or damage of the battery.
Refer to the instruction manual of the battery for handling the battery.

• Installation Place of Battery

1) Indoors, where the products are not subjected to rain or direct sun beam.
2) Where the products are not subjected to corrosive atmospheres such as hydrogen sulfide, sulfurous acid, chlorine, ammonia, chloric gas, sulfuric gas, acid, alkaline and salt and so on, and are free from splash of inflammable gas, grinding oil, oil mist, iron powder or chips and etc.
3) Well-ventilated and humid and dust-free place.
4) Vibration-free place

▪ Wiring Diagram

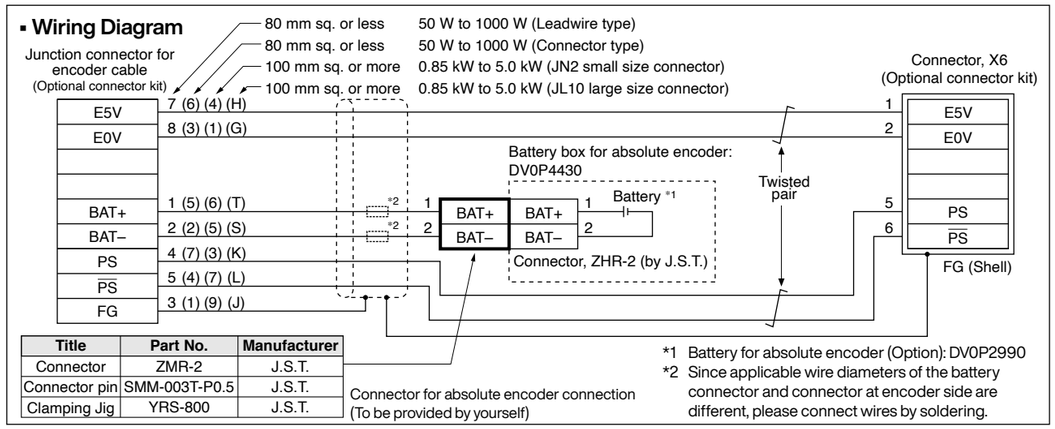

Title	Part No.	Manufacturer
Connector	ZMR-2	J.S.T.
Connector pin	SMM-003T-P0.5	J.S.T.
Clamping Jig	YRS-800	J.S.T.

Connector for absolute encoder connection (To be provided by yourself)

*1 Battery for absolute encoder (Option): DV0P2990
*2 Since applicable wire diameters of the battery connector and connector at encoder side are different, please connect wires by soldering.

Surge Absorber for Motor Brake

■ Recommended components

Motor		Part No.	Manufacturer
MSMF	50 W to 1000 W	TND14V-271K	NIPPON CHEMI-CON CORPORATION
	1.0 kW to 3.0 kW	Z15D151	SEMITEC Corporation
	4.0 kW, 5.0 kW	NVD07SCD082	KOA Corporation
MQMF	100W to 400 W	TND14V-271K	NIPPON CHEMI-CON CORPORATION
MHMF	50 W to 1000 W		
	1.0 kW, 1.5 kW	NVD07SCD082	KOA Corporation
	2.0 kW to 4.0 kW	Z15D151	SEMITEC Corporation
	5.0 kW, 7.5 kW	NVD07SCD082	KOA Corporation
MDMF	1.0 kW to 3.0 kW	NVD07SCD082	KOA Corporation
	4.0 kW	Z15D151	SEMITEC Corporation
	5.0 kW to 22.0 kW	NVD07SCD082	KOA Corporation
MGMF	0.85 kW to 1.8 kW	NVD07SCD082	KOA Corporation
	2.4 kW, 2.9 kW	Z15D151	SEMITEC Corporation
	4.4 kW, 5.5 kW	NVD07SCD082	KOA Corporation

Mounting Bracket

Part No.	DV0PM20100	Frame symbol of applicable driver	A-frame B-frame	Mounting screw (comes with)	M4 × L6 Pan head 4pcs

Dimension

Top / Bottom side

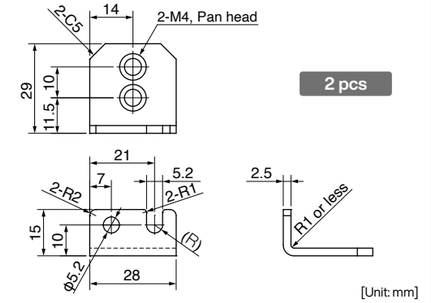

Mounting Bracket

Part No.	DV0PM20101	Frame symbol of applicable driver	C-frame D-frame	Mounting screw (comes with)	M4 × L6 Pan head 4pcs

Dimension

Top side

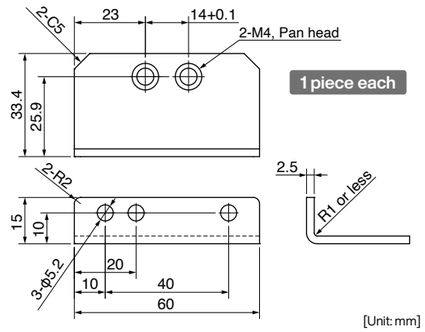

[Unit: mm]

Bottom side

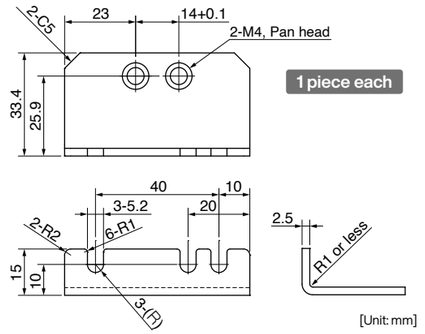

[Unit: mm]

Reactor

Fig.1

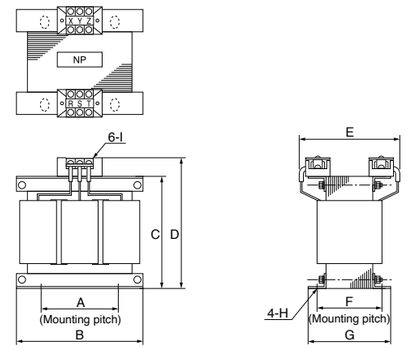

Fig.2

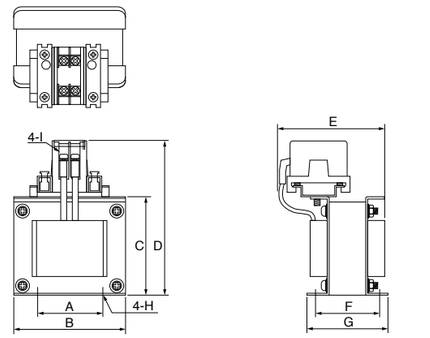

▪ Wiring of the reactor <3-Phase>

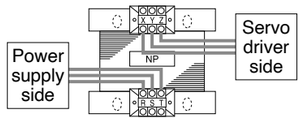

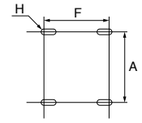

F: Center-to-center distance on outer circular arc

▪ Wiring of the reactor <Single phase>

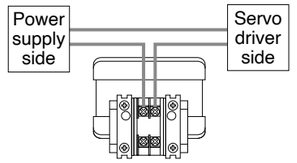

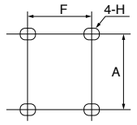

F: Center-to-center distance on slotted hole

[Unit: mm]

	Part No.	A	B	C	D	E (Max)	F	G	H	I	Inductance (mH)	Rated current (A)
Fig.1	**DV0P220**	65±1	125±1	(93)	136Max	155	70+3/–0	85±2	4-7φ×12	M4	6.81	3
	DV0P221	60±1	150±1	(113)	155Max	130	60+3/–0	75±2	4-7φ×12	M4	4.02	5
	DV0P222	60±1	150±1	(113)	155Max	140	70+3/–0	85±2	4-7φ×12	M4	2	8
	DV0P223	60±1	150±1	(113)	155Max	150	79+3/–0	95±2	4-7φ×12	M4	1.39	11
	DV0P224	60±1	150±1	(113)	160Max	155	84+3/–0	100±2	4-7φ×12	M5	0.848	16
	DV0P225	60±1	150±1	(113)	160Max	170	100+3/–0	115±2	4-7φ×12	M5	0.557	25
Fig.2	**DV0P227**	55±0.7	76.5±1	66.5±1	110Max	90	43.6±2	56±2	4-5φ×10	M3.5	4.02	5
	DV0P228	55±0.7	76.5±1	66.5±1	110Max	95	48.0±2	61±2	4-5φ×10	M3.5	2	8
	DV0PM20047	55±0.7	76.5±1	66.5±1	110Max	105	58.6±2	71±2	4-5φ×10	M4	1.39	11

* For application, refer to P.29 to P.42 and P.205 to P.210 “Table of Part Numbers and Options”.

Harmonic restraint

Harmonic restraint measures are not common to all countries. Therefore, prepare the measures that meet the requirements of the destination country.
When installing a product for Japan, refer to the instruction manual available on our website.

【Panasonic Industry Co., Ltd. web site】
industrial.panasonic.com/ac/e/

<Remarks>
When using a reactor, be sure to install one reactor to one servo driver.

External Regenerative Resistor

Part No.	Manufacturer's part No.	Specifications					Activation temperature of built-in thermal protector
		Resistance	cable core outside diameter	Weight	Rated power (reference)*1		
					Free air	with fan 1 m/s*2	
		Ω	mm	kg	W	W	
DV0P4280	RF70M	50	ϕ1.27 (AWG18 stranded wire)	0.1	10	25	140±5 ˚C B-contact Open/Close capacity (resistance load) 1 A 125 VAC 6000 times 0.5 A 250 VAC 10000 times
DV0P4281	RF70M	100		0.1	10	25	
DV0P4282	RF180B	25		0.4	17	50	
DV0P4283	RF180B	50		0.2	17	50	
DV0P4284	RF240	30		0.5	40	100	
DV0P4285	RH450F	20		1.2	52	130	

Manufacturer : Iwaki Musen Kenkyusho

*1 Power with which the driver can be used without activating the built-in thermal protector.
A built-in thermal fuse and a thermal protector are provided for safety.
The circuit should be so designed that the power supply will be turned off as the thermal protector operates.
The built-in thermal fuse blows depending on changes in heat dissipation condition, operating temperature limit, power supply voltage or load.
Mount the regenerative resistor on a machine operating under aggressive regenerating condition (high power supply voltage, large load inertia, shorter deceleration time, etc.) and make sure that the surface temperature will not exceed 100 ℃.

*2 If the wind speed is 1m / s by the fan.

Frame	Power supply	
	Single phase, 100 V	Single phase, 200 V 3-phase, 200 V
A	DV0P4280	DV0P4281 (100 W or less) DV0P4283 (200 W)
B	DV0P4283	DV0P4283
C	DV0P4282	
D	—	DV0P4284
E		DV0P4284 × 2 in parallel or DV0P4285
F		DV0P4285 × 2 in parallel
G		DV0P4285 × 3 in parallel
H		DV0P4285 × 6 in parallel

DV0P4280, DV0P4281

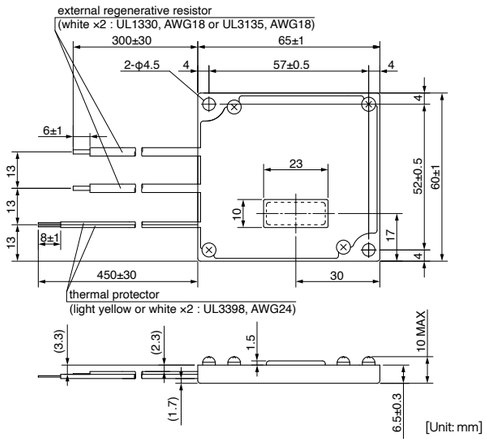

DV0P4282, DV0P4283

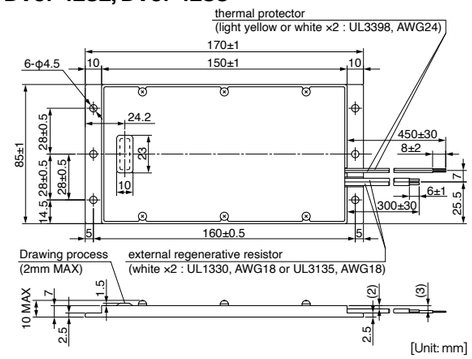

DV0P4284

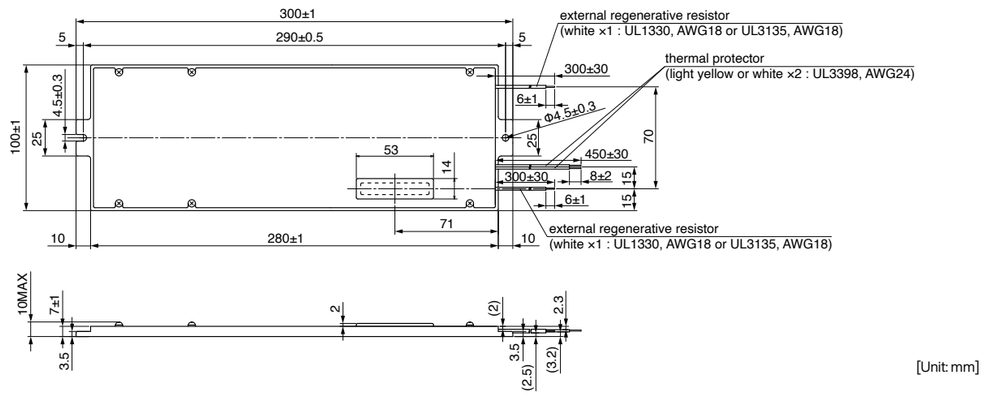

DV0P4285

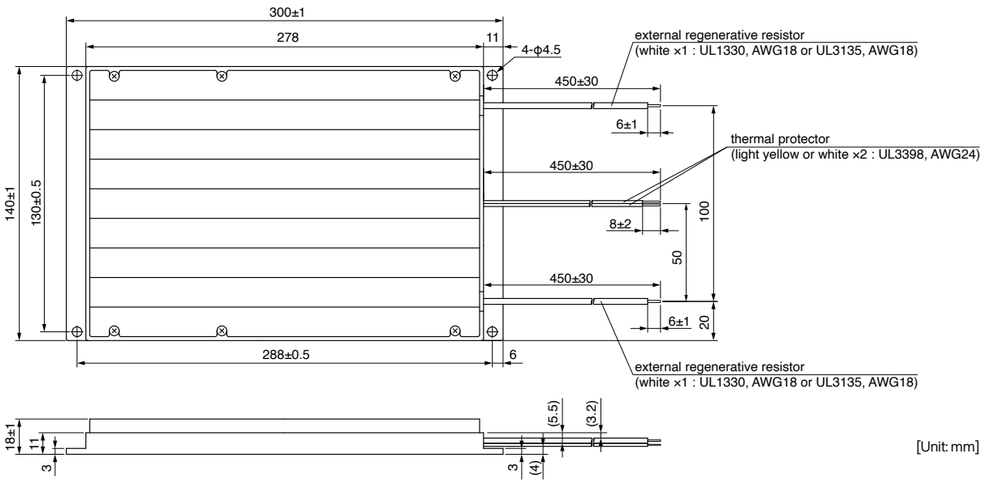

<Caution when using external regenerative resistor>

Regenerative resistor gets very hot.

Configure a circuit so that a power supply shuts down when built-in thermal protector of the regenerative resistor works. Because it is automatic reset thermal protector, please apply a self-holding circuit to the outside in order to maintain safety in case of sudden activation. During the failure of the driver, the surface temperature of the regenerative resistor may exceed the operating temperature before thermal protector starts to work.
Built-in thermal fuse of regenerative resistor is intended to prevent from ignition during the failure of the driver and not intended to suppress the surface temperature of the resistor.

- **Be attached the regenerative resistance to non-combustible material such as metal.**
- **Built-in thermal fuse of regenerative resistor is intended to prevent from ignition during the failure of the driver and not intended to suppress the surface temperature of the resistor.**
- **Do not install the regenerative resistor near flammable materials.**

Daisy Chain (Excluding A6SE, A6NE, A6BE Series)

Part No.	DV0PM24610

• Components

Title	Part No.	Manufacturer	Note
Connector	CIF-PCNS08KK-072R	J.S.T Mfg. Co., Ltd.	For Connector X2 (2-pins)
Cable	3-core cable with shield	–	Core diameter AWG24

▪ Pin disposition of connector, connector X2

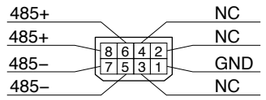

Shell: FG

(Viewed from cable)

<Remarks>
- Do not connect anything to NC.
- The braided wire of the cable is connected to the shell (housing) of the connector.

▪ Table for wiring

Cable ①

Pin No.	Signal name	Core color
8	485+	Red
7	485–	Yellow
1	GND	White

Cable ②

Pin No.	Signal name	Core color
6	485+	Red
5	485–	Yellow
1	GND	White

▪ Dimensions

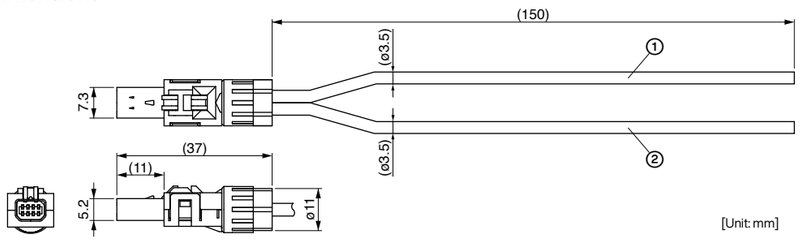

[Unit: mm]

Encoder Cable For available optional items, please refer to P.309 to P.312.

1	2	3	4	5	6	7	8	9	10	11	12
M	F	E	C	A	0	0	5	0	M	J	D
					①				②	③	④

Type classification

MFECA: Encoder cable

① Cable length

0030	3 m
0050	5 m
0100	10 m
0200	20 m

② Cable type

E	PVC cable with shield by Oki Electric Cable Co., 0.20 mm² × 4P(8-wire), 3P(6-wire)
M	Hitachi Cable, Ltd. Highly bendable type
T	Hitachi Cable, Ltd. Standard bendable type

③ Cable end (Encoder side)

A	Tyco Electronics Japan G.K. connector
J	Japan Aviation Electronics Industry, Ltd. connector (Direction of motor shaft)
K	Japan Aviation Electronics Industry, Ltd. connector (Opposite direction of motor shaft)
P	Japan Aviation Electronics Industry, Ltd. plug connector
S	"S" shaped cannonplug
T	Japan Aviation Electronics Industry, Ltd. plug connector

④ Cable end (Driver side)

D	Connector (Without battery box)
E	Connector (With battery box)

Motor Cable, Brake Cable For available optional items, please refer to P.309 to P.312.

1	2	3	4	5	6	7	8	9	10	11	12
M	F	M	C	A	0	0	5	2	N	J	D
				①		②		③	④	⑤	⑥

AC servo motor cable

① Type classification

A	Standard
B	Special
⋮	Design order

② Cable length

003	3 m
005	5 m
010	10 m
020	20 m

③ Sectional area of cable core

0	0.75 mm²
1	1.25 mm²
2	2.0 mm²
3	3.5 mm²
7	0.3 mm²

④ Cable type

ROBO-TOP® is a trade mark of DYDEN CORPORATION

E	ROBO-TOP® 4-wire by DYDEN CORPORATION
F	ROBO-TOP® 6-wire by DYDEN CORPORATION
G	ROBO-TOP® 2-wire by DYDEN CORPORATION
N	4-wire by Hitachi Cable, Ltd. (Highly bendable type)
P	4-wire by Hitachi Cable, Ltd. (Standard bendable type)
R	2-wire by Hitachi Cable, Ltd. (Highly bendable type)
S	2-wire by Hitachi Cable, Ltd. (Standard bendable type)
U	4-wire for A6 series small motor* (Highly bendable type)
V	6-wire for A6 series small motor* (Highly bendable type)
W	4-wire for A6 series small motor* (Standard bendable type)
X	6-wire for A6 series small motor* (Standard bendable type)

* 80 mm sq. or less

⑤ Cable end at motor side

C	S type cannon plug
E	Tyco Electronics Japan G.K. connector
F	Japan Aviation Electronics Industry, Ltd. connector (Direction of motor shaft)
G	Japan Aviation Electronics Industry, Ltd. connector (Opposite direction of motor shaft)
J	Japan Aviation Electronics Industry, Ltd. connector (Direction of motor shaft)
K	Japan Aviation Electronics Industry, Ltd. connector (Opposite direction of motor shaft)
U	Japan Aviation Electronics Industry, Ltd. plug connector

⑥ Cable end at driver side

D	Rod terminal
T	Clamp terminal

Manufacturer	Tel No. / Home Page	Peripheral components
Iwaki Musen Kenkyusho Co., Ltd.	+81-44-833-4311 http://www.iwakimusen.co.jp/	Regenerative resistor
KOA Corporation	+81-42-336-5300 http://www.koanet.co.jp/en/index.htm	Surge absorber for holding brake
NIPPON CHEMI-CON CORPORATION	+81-3-5436-7711 http://www.chemi-con.co.jp/e/index.html	
SEMITEC Corporation	+81-3-3621-2703 http://www.semitec.co.jp/english2/	
TDK Corporation	+81-3-5201-7229 http://www.global.tdk.com/	Ferrite core
NISSHIN ELECTRIC Co., LTD.	+81-4-2934-4151 http://www.nisshin-electric.com	
Konno Kogyosho Co., Ltd.	+81-184-53-2307	
Okaya Electric Industries Co. Ltd.	+81-3-4544-7040 http://www.okayaelec.co.jp/english/index.html	Surge absorber Noise filter
SOSHIN ELECTRIC Co., Ltd.	+81-3-5730-4500 http://www.soshin-ele.com/	Noise filter
Japan Aviation Electronics Industry, Ltd.	+81-3-3780-2717 http://www.jae.com/en/index.html	Connector
Japan Molex Inc.	+81-462-65-2313 http://www.molex.co.jp	
J.S.T. Mfg. Co., Ltd.	+81-45-543-1271 http://www.jst-mfg.com/index_e.php	
Sumitomo 3M	+81-3-5716-7290 http:/solutions.3m.com/wps/portal/3M/ja_JP/WW2/Country/	
Tyco Electronics Japan G.K.	+81-44-844-8052 http://www.te.com/ja/home.html	
DYDEN CORPORATION	+81-3-5805-5880 http://www.dyden.co.jp/english/index.htm	Cable
DR. JOHANNES HEIDENHAIN GmbH	+81-3-3234-7781 http://www.heidenhain.de/de_EN/company/contact/	External scale
Fagor Automation S.Coop.	+34-943-719-200 http://www.fagorautomation.com	
Magnescale Co., Ltd.	+81-463-92-7971 http://www.mgscale.com/mgs/language/english/	
Mitutoyo Corporation	+81-44-813-8234 http://www.mitutoyo.co.jp/eng/	
Nidec Sankyo Corporation	+81-3-5740-3006 http://www.nidec-sankyo.co.jp/	
Renishaw plc	+44 1453 524524 www.renishaw.com	

* The above list is for reference only. We may change the manufacturer without notice.

MEMO

Communication cycle 0.0625 ms

Ultra-high-speed network driver

RTEX Realtime Express

Realtime Express(RTEX)

AC servo motor & driver

MINAS A6N Series



Pursuit of ultimate real-time processing

Pursuit of ultimate real-time processing

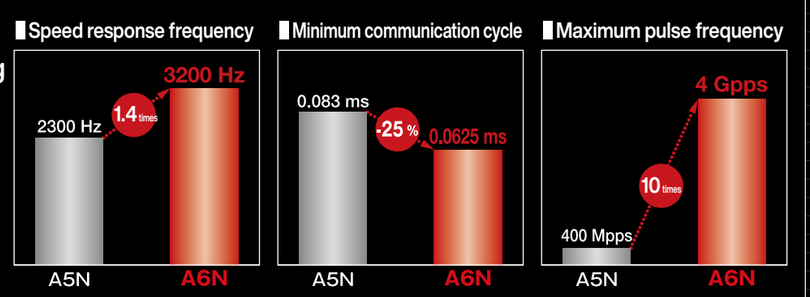

●Max.4 Mpps,when using AB-phase external scale

Multifunctional capabilities to match various needs

◎ Supports all positions,speeds and torque modes (w/built-in positioning function)
◎ High-precision position latch and comparison
◎ Communication cycle can be set to any time between 2 ms and 62.5 µs.

Simple network

◎ Satisfies both high performance and low cost requirements
◎ Synchronization established by communication IC
◎ Easier development of compatible equipment

●Easy setup with setup support software “PANATERM”.

INDEX

Features 349
Advantages of RTEX 351
Model designation 353
Driver appearance 354
System configretion 354
Table of parts numbers 355
Driver 359
Driver common specifications 359
Dimensions of driver 363
Options 368
Interface cable 368
Interface connector Kit 368

* For options other than for Interface cable and connector kit for interface,see P.29 to P.42.

●Realtime Express and RTEX are registered trademarks of Panasonic Holdings Corporation..

Advantages of RTEX

● The “Conventional I/F” used in this document means a pulse train and analog I/F.

Wire-saving

Wire-saving reduces various troubles relating to wires. The cables used are widely available Ethernet cables, which are easy to obtain and inexpensive.

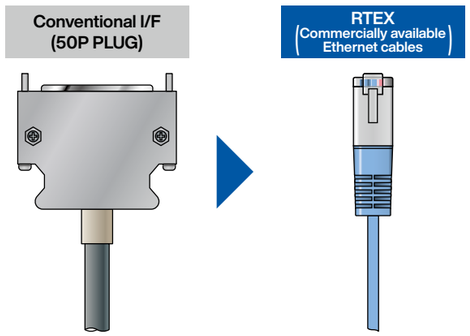

Maximum length of the node-to-node cable is 100 m.

Flexibility increases in the layout of an upper controller and servo motors. The RTEXs can also support large-scale systems.

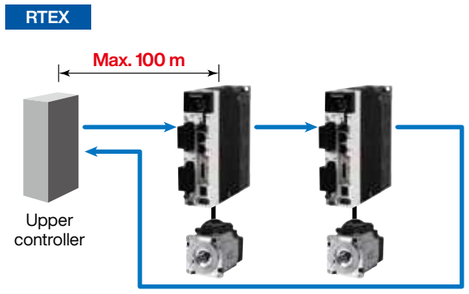

Configurable parameter settings

Upper controllers can configure servo parameters. This enables parameters to be configured automatically instead by human at installation.

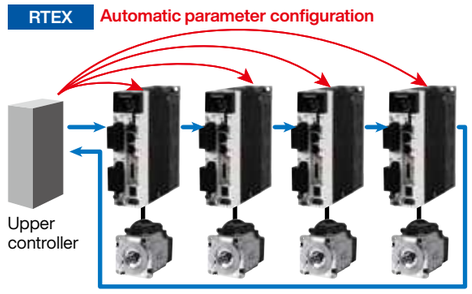

* Parameters can be changed even during operation

Real time monitoring is enabled.

Upper controllers can monitor various information, such as position, speed, and torque, etc. in real time. Since alarm codes can also be read out, analysis can be performed promptly at trouble occurrence.

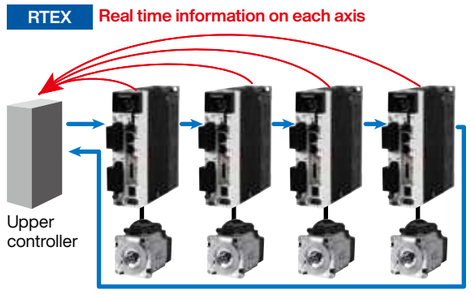

Up to 32 axes can be controlled.

In comparison with conventional I/Fs, the number of axes increases that can be controlled by next upper controllers.

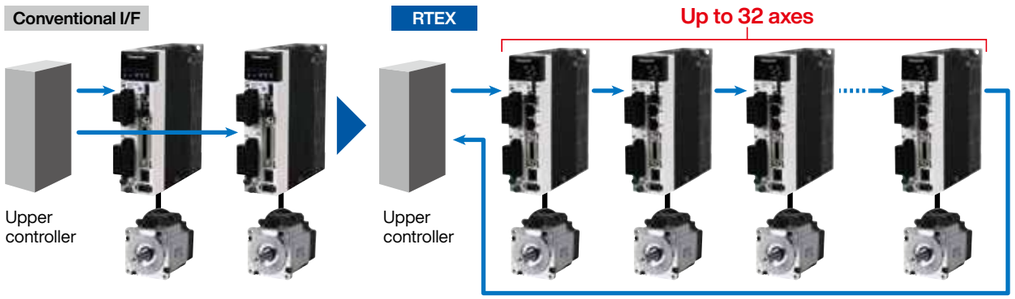

* If devices other than servo motors are also connected, up to 32 nodes can be connected as entire slaves including the servo motors. Actual number of controllable axes depends on the specification of an upper controller.

Profile position mode is supported

Profile position mode is supported for PTP control as well as cyclic position, speed, and torque. The processing done by upper controllers can be simplified.

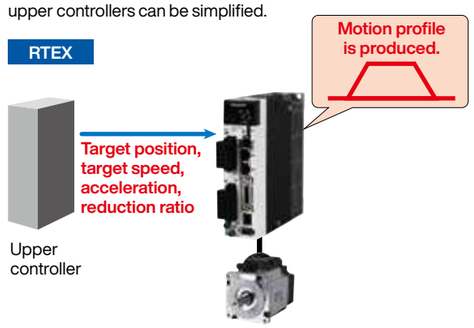

High synchronization capability among axes

Upper controllers synchronize with entire servo motor axes at high accuracy. With the synchronization capability higher than that of conventional I/F, the RTEX is best suitable for machine tools, robots, gantry systems, and others.

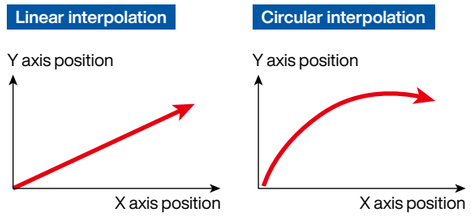

* Interpolation depends on the specification of upper controllers. This is not the function of individual servo motor.

Absolute system can easily be built.

Conventional I/F requires an additional wire to transmit absolute data, while the RTEX doesn't. Each servo motor synthesizes one-revolution data and multi-revolution data to produce an actual position, so that the amount of work to be done by an upper controller is decreased.

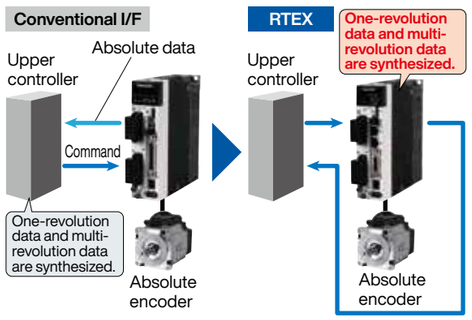

High resolution command is enabled

The position command rate of max. 8 Mpps* in a pulse train I/F is improved to 4 Gpps* in the RTEX. Vibrations are reduced due to a smooth command sent to a servo motor using the advantage of the high-resolution encoder.

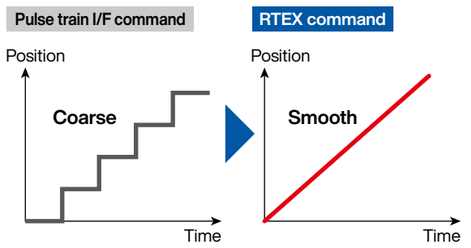

* Max. 8 Mpps is a rate when A6 servo driver is used.
Max. 4 Gpps is a rate when A6N servo driver is used.

High noise-proof property

With a patented error correction function, noise-proof property is at least 2.5 KV. This conforms to IEC61000-4-4 standard.

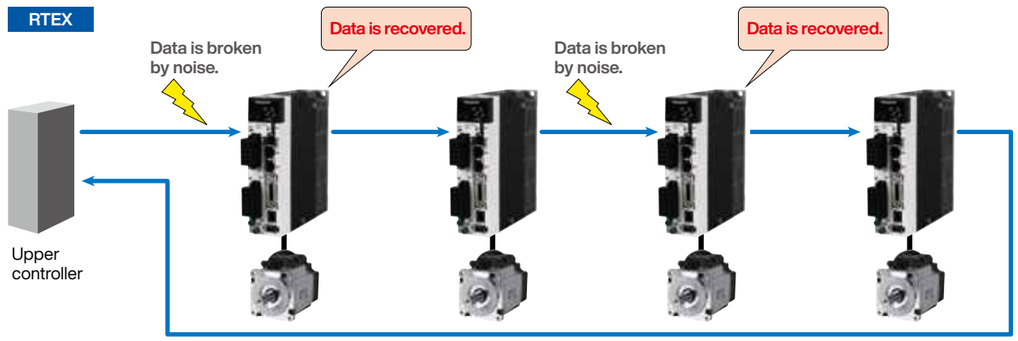

* The error correction function has a limit. Unrecovered broken data causes a communication error.

Model Designation

* For combination of elements of model number, refer to Index P.448.

Servo Motor

M S M | F | 5 A | Z | L | 1 | A 1 | ✻ — Special specifications

① ② ③ ④ ⑤ ⑥ ⑦

① Type

Symbol	Type	
MSM	Low inertia	(50 W to 5.0 kW)
MQM	Middle inertia	(100 W to 400 W)
MDM	Middle inertia	(1.0 kW to 22.0 kW)
MGM	Middle inertia	(0.85 kW to 5.5 kW)
MHM	High inertia	(50 W to 7.5 kW)

② Series

Symbol	Series name
F	A6 Family

③ Motor rated output

Symbol	Rated output
5A	50 W
01	100 W
02	200 W
04	400 W
08	750 W
09	0.85 kW, 1000 W (130 mm sq.) (80 mm sq.)
10	1.0 kW

Symbol	Rated output
13	1.3 kW
15	1.5 kW
18	1.8 kW
20	2.0 kW
24	2.4 kW
29	2.9 kW
30	3.0 kW
40	4.0 kW

Symbol	Rated output
44	4.4 kW
50	5.0 kW
55	5.5 kW
75	7.5 kW
C1	11.0 kW
C5	15.0 kW
D2	22.0 kW

④ Voltage specifications

Symbol	Specifications
1	100 V
2	200 V
Z	100 V/ 200 V common (50 W only)

⑤ Rotary encoder specifications

Symbol	Format	Pulse counts	Resolution	Wires
L	Absolute	23-bit	8388608	7

⑥ Design order

Symbol	Specifications
1	Standard

<Note>
When using a rotary encoder as an incremental system (not using multi-turn data), do not connect a battery for absolute encoder.

⑦ Motor specifications: IP67 *2 100 mm sq. to 220 mm sq. MSMF, MHMF, MDMF, MGMF

Symbol		Shaft		Holding brake		Oil seal		Encoder terminal	
		Round	Key-way	without	with	with	With protective lip	Connector JN2 (Small size)	Connector JL10 (Large size) *3
C	5	●		●		●		●	
C	6	●		●		●			●
C	7	●		●			●	●	
C	8	●		●			●		●
D	5	●			●	●		●	
D	6	●			●	●			●
D	7	●			●		●	●	
D	8	●			●		●		●
G	5		●	●		●		●	
G	6		●	●		●			●
G	7		●	●			●	●	
G	8		●	●			●		●
H	5		●		●	●		●	
H	6		●		●	●			●
H	7		●		●		●	●	
H	8		●		●		●		●

⑦ Motor specifications: 80 mm sq. or less MSMF 50 W to 1000 W

Symbol		Shaft		Holding brake		Oil seal		Motor encoder terminal *1	
		Round	Key-way, center tap	without	with	without	with	Connector JN	Lead wire
A	1	●		●		●		●	
A	2	●		●		●			●
B	1	●			●	●		●	
B	2	●			●	●			●
C	1	●		●			●	●	
C	2	●		●			●		●
D	1	●			●		●	●	
D	2	●			●		●		●
S	1		●	●		●		●	
S	2		●	●		●			●
T	1		●		●	●		●	
T	2		●		●	●			●
U	1		●	●			●	●	
U	2		●	●			●		●
V	1		●		●		●	●	
V	2		●		●		●		●

⑦ Motor specifications: 80 mm sq. or less MHMF 50 W to 1000 W MQMF 100 W to 400 W

Symbol		Shaft		Holding brake		Oil seal			Motor encoder terminal *1	
		Round	Key-way, center tap	without	with	without	with	With protective lip	Connector JN	Lead wire
A	1	●		●		●			●	
A	2	●		●		●				●
B	1	●			●	●			●	
B	2	●			●	●				●
C	1	●		●			●		●	
C	2	●		●			●			●
C	3	●		●				●	●	
C	4	●		●				●		●
D	1	●			●		●		●	
D	2	●			●		●			●
D	3	●			●			●	●	
D	4	●			●			●		●
S	1		●	●		●			●	
S	2		●	●		●				●
T	1		●		●	●			●	
T	2		●		●	●				●
U	1		●	●			●		●	
U	2		●	●			●			●
U	3		●	●				●	●	
U	4		●	●				●		●
V	1		●		●		●		●	
V	2		●		●		●			●
V	3		●		●			●	●	
V	4		●		●			●		●

*1 Connector type: IP67, Lead wire type: IP65 *2 22.0 kW: IP44
*3 Connector on the motor side encoder. (Also applicable to screwed type.)

Servo Driver

M A D | L | N | 1 | 5 | N | E | ✻ ✻ ✻ — Special specifications

① ② ③ ④ ⑤ ⑥ ⑦

① Frame symbol

Symbol	Frame	Symbol	Frame
MAD	A-Frame	MED	E-Frame
MBD	B-Frame	MFD	F-Frame
MCD	C-Frame	MGD	G-Frame
MDD	D-Frame	MHD	H-Frame

② Series

Symbol	Series name
L	A6 Family

③ Safety Function *4

Symbol	Specifications
N	without the safety function
T	with the safety function

④ Max. current rating

Symbol	Current rating	Symbol	Current rating
0	6 A	9	80 A
1	8 A	A	100 A
2	12 A	B	120 A
3	22 A	C	160 A
4	24 A	E	240 A
5	40 A	F	360 A
8	60 A		

⑤ Supply voltage specifications

Symbol	Specifications
1	Single phase 100 V
3	3-phase 200 V
5	Single/3-phase 200 V

⑥ I/f specifications ⑦ Classification of type *4

Symbol (specification)	Symbol	Specification
N (RTEX)	E	Standard for rotary motor
	F	Multifunction for rotary motor
	L	Standard for linear/ DD motor **Special Order Product**
	M	Multifunction for linear/ DD motor **Special Order Product**

*4 Standard type (with a part number ending in E or L) has no safety function. Multi-function type (with a part number ending in F or M) has a safety function.

Appearance/ System configuration

Appearance

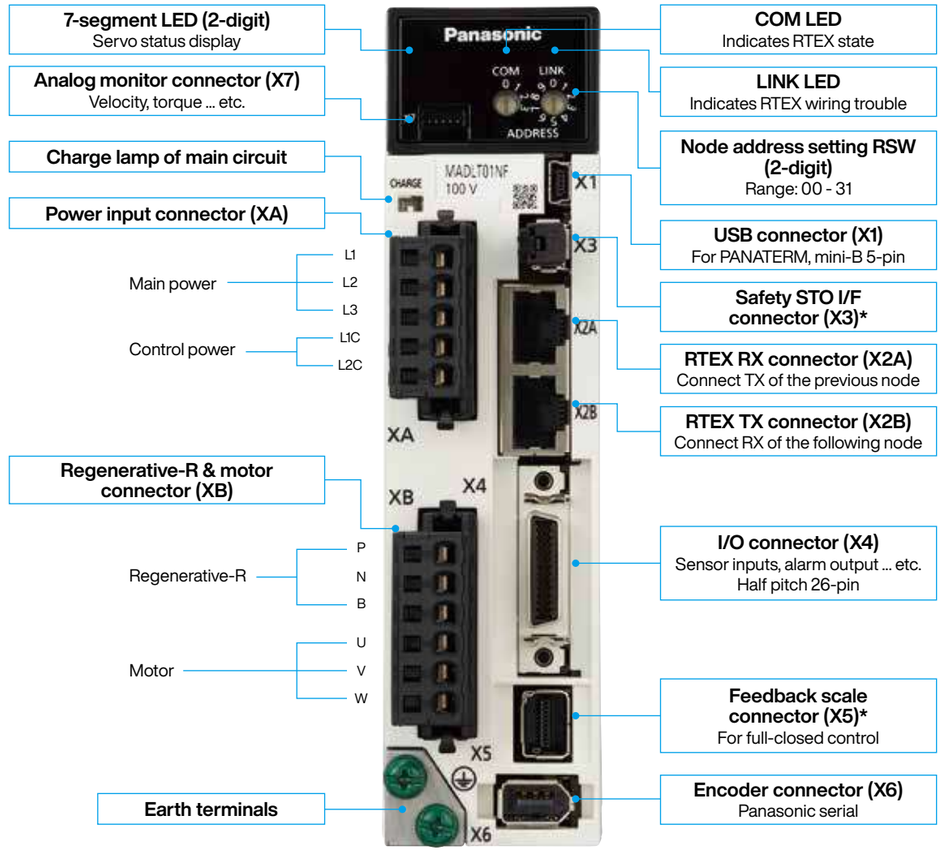

* The photo is A6NF series. There are no X3 and X5 connectors in the A6NE series.

Typical system configuration

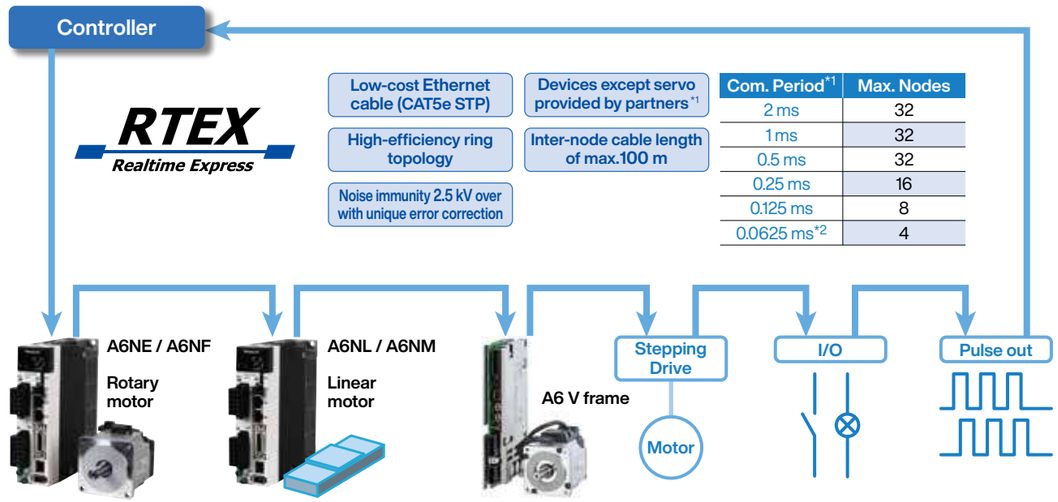

*1: The communication period and connection of slave devices depend on the controller specification.
*2: For communication period 0.0625 ms, command update period is 0.125 ms only.

For the motor specifications, refer to the A6 series on p.63 to p.118.

● 80 mm sq. or less 50 W to 1000 W MSMF, MQMF, MHMF Leadwire type IP65

Motor					Driver		Power capacity (at rated load)
Motor series		Power supply	Output (W)	Part No.	A6N series Part No.	Dimension Frame	
MSMF (Leadwire type) 3000 r/min Low inertia		Single phase 100 V	50	MSMF5AZL1 □ 2	MADL☆01N☆	A-frame	Approx. 0.4 kVA
			100	MSMF011L1 □ 2	MADL☆11N☆		
			200	MSMF021L1 □ 2	MBDL☆21N☆	B-frame	Approx. 0.5 kVA
			400	MSMF041L1 □ 2	MCDL☆31N☆	C-frame	Approx. 0.9 kVA
		Single phase/ 3-phase 200 V	50	MSMF5AZL1 □ 2＊	MADL☆05N☆	A-frame	Approx. 0.5 kVA
			100	MSMF012L1 □ 2＊			
			200	MSMF022L1 □ 2＊	MADL☆15N☆		
			400	MSMF042L1 □ 2＊	MBDL☆25N☆	B-frame	Approx. 0.9 kVA
			750	MSMF082L1 □ 2＊	MCDL☆35N☆	C-frame	Approx. 1.8 kVA
			1000	MSMF092L1 □ 2＊	MDDL☆45N☆	D-frame	Approx. 2.4 kVA
MQMF (Leadwire type) 3000 r/min Middle inertia Flat type		Single phase 100 V	100	MQMF011L1 □□	MADL☆11N☆	A-frame	Approx. 0.4 kVA
			200	MQMF021L1 □□	MBDL☆21N☆	B-frame	Approx. 0.5 kVA
			400	MQMF041L1 □□	MCDL☆31N☆	C-frame	Approx. 0.9 kVA
		Single phase/ 3-phase 200 V	100	MQMF012L1 □□＊	MADL☆05N☆	A-frame	Approx. 0.5 kVA
			200	MQMF022L1 □□＊	MADL☆15N☆		
			400	MQMF042L1 □□＊	MBDL☆25N☆	B-frame	Approx. 0.9 kVA
MHMF (Leadwire type) 3000 r/min High inertia		Single phase 100 V	50	MHMF5AZL1 □□	MADL☆01N☆	A-frame	Approx. 0.4 kVA
			100	MHMF011L1 □□	MADL☆11N☆		
			200	MHMF021L1 □□	MBDL☆21N☆	B-frame	Approx. 0.5 kVA
			400	MHMF041L1 □□	MCDL☆31N☆	C-frame	Approx. 0.9 kVA
		Single phase/ 3-phase 200 V	50	MHMF5AZL1 □□＊	MADL☆05N☆	A-frame	Approx. 0.5 kVA
			100	MHMF012L1 □□＊			
			200	MHMF022L1 □□＊	MADL☆15N☆		
			400	MHMF042L1 □□＊	MBDL☆25N☆	B-frame	Approx. 0.9 kVA
			750	MHMF082L1 □□＊	MCDL☆35N☆	C-frame	Approx. 1.8 kVA
			1000	MHMF092L1 □□＊	MDDL☆55N☆	D-frame	Approx. 2.4 kVA

□ ☆ ＊ : For more information, refer to “Model Designation” on P.353.

● 80 mm sq. or less 50 W to 1000 W MSMF, MQMF, MHMF Connector type IP67

Motor					Driver		Power capacity (at rated load)
Motor series		Power supply	Output (W)	Part No.	A6N series Part No.	Dimension Frame	
MSMF (Connector type) 3000 r/min Low inertia		Single phase 100 V	50	MSMF5AZL1 □ 1	MADL☆01N☆	A-frame	Approx. 0.4 kVA
			100	MSMF011L1 □ 1	MADL☆11N☆		
			200	MSMF021L1 □ 1	MBDL☆21N☆	B-frame	Approx. 0.5 kVA
			400	MSMF041L1 □ 1	MCDL☆31N☆	C-frame	Approx. 0.9 kVA
		Single phase/ 3-phase 200 V	50	MSMF5AZL1 □ 1	MADL☆05N☆	A-frame	Approx. 0.5 kVA
			100	MSMF012L1 □ 1			
			200	MSMF022L1 □ 1	MADL☆15N☆		
			400	MSMF042L1 □ 1	MBDL☆25N☆	B-frame	Approx. 0.9 kVA
			750	MSMF082L1 □ 1	MCDL☆35N☆	C-frame	Approx. 1.8 kVA
			1000	MSMF092L1 □ 1	MDDL☆45N☆	D-frame	Approx. 2.4 kVA
MQMF (Connector type) 3000 r/min Middle inertia Flat type		Single phase 100 V	100	MQMF011L1 □□	MADL☆11N☆	A-frame	Approx. 0.4 kVA
			200	MQMF021L1 □□	MBDL☆21N☆	B-frame	Approx. 0.5 kVA
			400	MQMF041L1 □□	MCDL☆31N☆	C-frame	Approx. 0.9 kVA
		Single phase/ 3-phase 200 V	100	MQMF012L1 □□	MADL☆05N☆	A-frame	Approx. 0.5 kVA
			200	MQMF022L1 □□	MADL☆15N☆		
			400	MQMF042L1 □□	MBDL☆25N☆	B-frame	Approx. 0.9 kVA
MHMF (Connector type) 3000 r/min High inertia		Single phase 100 V	50	MHMF5AZL1 □□	MADL☆01N☆	A-frame	Approx. 0.4 kVA
			100	MHMF011L1 □□	MADL☆11N☆		
			200	MHMF021L1 □□	MBDL☆21N☆	B-frame	Approx. 0.5 kVA
			400	MHMF041L1 □□	MCDL☆31N☆	C-frame	Approx. 0.9 kVA
		Single phase/ 3-phase 200 V	50	MHMF5AZL1 □□	MADL☆05N☆	A-frame	Approx. 0.5 kVA
			100	MHMF012L1 □□			
			200	MHMF022L1 □□	MADL☆15N☆		
			400	MHMF042L1 □□	MBDL☆25N☆	B-frame	Approx. 0.9 kVA
			750	MHMF082L1 □□	MCDL☆35N☆	C-frame	Approx. 1.8 kVA
			1000	MHMF092L1 □□	MDDL☆55N☆	D-frame	Approx. 2.4 kVA

□ ☆ : For more information, refer to “Model Designation” on P.353.

For the motor specifications, refer to the A6 series on p.63 to p.118.

● 100 mm sq. or more 0.85 kW to 5.0 kW MSMF, MDMF, MGMF, MHMF
Encoder connector (Large size JL10)*1 type IP67

Motor				Driver		Power capacity (at rated load)
Motor series	Power supply	Output (W)	Part No.	A6N series Part No.	Dimension Frame	
MSMF (Large size JL10 type) 3000 r/min Low inertia IP67	Single phase/ 3-phase 200 V	1000	MSMF102L1 □□✻	MDDL☆55N☆	D-frame	Approx. 2.9 kVA
		1500	MSMF152L1 □□✻			
	3-phase 200 V	2000	MSMF202L1 □□✻	MEDL☆83N☆	E-frame	Approx. 3.8 kVA
		3000	MSMF302L1 □□✻	MFDL☆A3N☆	F-frame	Approx. 5.2 kVA
		4000	MSMF402L1 □□✻	MFDL☆B3N☆		Approx. 7.8 kVA
		5000	MSMF502L1 □□✻			
MDMF (Large size JL10 type) 2000 r/min Middle inertia IP67	Single phase/ 3-phase 200 V	1000	MDMF102L1 □□✻	MDDL☆45N☆	D-frame	Approx. 2.4 kVA
		1500	MDMF152L1 □□✻	MDDL☆55N☆		Approx. 2.9 kVA
	3-phase 200 V	2000	MDMF202L1 □□✻	MEDL☆83N☆	E-frame	Approx. 3.8 kVA
		3000	MDMF302L1 □□✻	MFDL☆A3N☆	F-frame	Approx. 5.2 kVA
		4000	MDMF402L1 □□✻	MFDL☆B3N☆		Approx. 7.8 kVA
		5000	MDMF502L1 □□✻			
MGMF (Large size JL10 type) [Low speed/ High torque type] 1500 r/min Middle inertia IP67	Single phase/ 3-phase 200 V	850	MGMF092L1 □□✻	MDDL☆45N☆	D-frame	Approx. 2.4 kVA
		1300	MGMF132L1 □□✻	MDDL☆55N☆		Approx. 2.9 kVA
	3-phase 200 V	1800	MGMF182L1 □□✻	MEDL☆83N☆	E-frame	Approx. 3.8 kVA
		2400	MGMF242L1 □□✻	MEDL☆93N☆		Approx. 4.5 kVA
		2900	MGMF292L1 □□✻	MFDL☆B3N☆	F-frame	Approx. 7.8 kVA
		4400	MGMF442L1 □□✻			
MHMF (Large size JL10 type) 2000 r/min High inertia IP67	Single phase/ 3-phase 200 V	1000	MHMF102L1 □□✻	MDDL☆45N☆	D-frame	Approx. 2.4 kVA
		1500	MHMF152L1 □□✻	MDDL☆55N☆		Approx. 2.9 kVA
	3-phase 200 V	2000	MHMF202L1 □□✻	MEDL☆83N☆	E-frame	Approx. 3.8 kVA
		3000	MHMF302L1 □□✻	MFDL☆A3N☆	F-frame	Approx. 5.2 kVA
		4000	MHMF402L1 □□✻	MFDL☆B3N☆		Approx. 7.8 kVA
		5000	MHMF502L1 □□✻			

□ ☆ ✻ : For more information, refer to “Model Designation” on P.353.

● 100 mm sq. or more 0.85 kW to 5.0 kW MSMF, MDMF, MGMF, MHMF
Encoder connector (Small size JN2)*2 type IP67

Motor				Driver		Power capacity (at rated load)
Motor series	Power supply	Output (W)	Part No.	A6N series Part No.	Dimension Frame	
MSMF (Small size JN2 type) 3000 r/min Low inertia IP67	Single phase/ 3-phase 200 V	1000	MSMF102L1 □□	MDDL☆55N☆	D-frame	Approx. 2.9 kVA
		1500	MSMF152L1 □□			
	3-phase 200 V	2000	MSMF202L1 □□	MEDL☆83N☆	E-frame	Approx. 3.8 kVA
		3000	MSMF302L1 □□	MFDL☆A3N☆	F-frame	Approx. 5.2 kVA
		4000	MSMF402L1 □□	MFDL☆B3N☆		Approx. 7.8 kVA
		5000	MSMF502L1 □□			
MDMF (Small size JN2 type) 2000 r/min Middle inertia IP67	Single phase/ 3-phase 200 V	1000	MDMF102L1 □□	MDDL☆45N☆	D-frame	Approx. 2.4 kVA
		1500	MDMF152L1 □□	MDDL☆55N☆		Approx. 2.9 kVA
	3-phase 200 V	2000	MDMF202L1 □□	MEDL☆83N☆	E-frame	Approx. 3.8 kVA
		3000	MDMF302L1 □□	MFDL☆A3N☆	F-frame	Approx. 5.2 kVA
		4000	MDMF402L1 □□	MFDL☆B3N☆		Approx. 7.8 kVA
		5000	MDMF502L1 □□			
MGMF (Small size JN2 type) [Low speed/ High torque type] 1500 r/min Middle inertia IP67	Single phase/ 3-phase 200 V	850	MGMF092L1 □□	MDDL☆45N☆	D-frame	Approx. 2.4 kVA
		1300	MGMF132L1 □□	MDDL☆55N☆		Approx. 2.9 kVA
	3-phase 200 V	1800	MGMF182L1 □□	MEDL☆83N☆	E-frame	Approx. 3.8 kVA
		2400	MGMF242L1 □□	MEDL☆93N☆		Approx. 4.5 kVA
		2900	MGMF292L1 □□	MFDL☆B3N☆	F-frame	Approx. 7.8 kVA
		4400	MGMF442L1 □□			
MHMF (Small size JN2 type) 2000 r/min High inertia IP67	Single phase/ 3-phase 200 V	1000	MHMF102L1 □□	MDDL☆45N☆	D-frame	Approx. 2.4 kVA
		1500	MHMF152L1 □□	MDDL☆55N☆		Approx. 2.9 kVA
	3-phase 200 V	2000	MHMF202L1 □□	MEDL☆83N☆	E-frame	Approx. 3.8 kVA
		3000	MHMF302L1 □□	MFDL☆A3N☆	F-frame	Approx. 5.2 kVA
		4000	MHMF402L1 □□	MFDL☆B3N☆		Approx. 7.8 kVA
		5000	MHMF502L1 □□			

□ ☆ : For more information, refer to “Model Designation” on P.353.

● 176 mm sq. or more 5.5 kW or more MDMF, MGMF, MHMF
Encoder connector (Large size JL10)*1 type IP67

Motor				Driver		Power capacity (at rated load)
Motor series	Power supply	Output (W)	Part No.	A6N series Part No.	Dimension Frame	
MDMF (Large size JL10 type) 1500 r/min Middle inertia IP67*3	3-phase 200 V	7500	MDMF752L1 □ 6✻	MGDLTC3NF	G-frame	Approx. 11 kVA
		11000	MDMFC12L1 □ 6	MHDLTE3NF	H-frame	Approx. 15 kVA
		15000	MDMFC52L1 □ 6	MHDLTE3NF		Approx. 20 kVA
		22000 *3	MDMFD22L1 □ 6	MHDLTF3NF		Approx. 28 kVA
MGMF (Large size JL10 type) [Low speed/ High torque type] 1500 r/min Middle inertia IP67	3-phase 200 V	5500	MGMF552L1 □ 6✻	MGDLTC3NF	G-frame	Approx. 8.5 kVA
MHMF (Large size JL10 type) 1500 r/min High inertia IP67	3-phase 200 V	7500	MHMF752L1 □ 6✻	MGDLTC3NF	G-frame	Approx. 11 kVA

□ ☆ ✻ : For more information, refer to “Model Designation” on P.353.

● 176 mm sq. or more 5.5 kW or more MDMF, MGMF, MHMF
Encoder connector (Small size JN2)*2 type IP67

Motor				Driver		Power capacity (at rated load)
Motor series	Power supply	Output (W)	Part No.	A6N series Part No.	Dimension Frame	
MDMF (Small size JN2 type) 1500 r/min Middle inertia IP67*3	3-phase 200 V	7500	MDMF752L1 □ 5	MGDLTC3NF	G-frame	Approx. 11 kVA
		11000	MDMFC12L1 □ 5	MHDLTE3NF	H-frame	Approx. 15 kVA
		15000	MDMFC52L1 □ 5	MHDLTE3NF		Approx. 20 kVA
		22000 *3	MDMFD22L1 □ 5	MHDLTF3NF		Approx. 28 kVA
MGMF (Small size JN2 type) [Low speed/ High torque type] 1500 r/min Middle inertia IP67	3-phase 200 V	5500	MGMF552L1 □ 5	MGDLTC3NF	G-frame	Approx. 8.5 kVA
MHMF (Small size JN2 type) 1500 r/min High inertia IP67	3-phase 200 V	7500	MHMF752L1 □ 5	MGDLTC3NF	G-frame	Approx. 11 kVA

□ ☆ : For more information, refer to “Model Designation” on P.353.

*1: Encoder connector (Large size JL10)

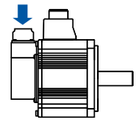

*2: Encoder connector (Small size JN2)

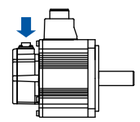

*3: 22.0 kW motor is IP44.

Basic Specifications

Input power	100 V	Main circuit		Single phase 100 V +10 % –15 % to 120 V +10 % –15 % 50 Hz / 60 Hz
		Control circuit		Single phase 100 V +10 % –15 % to 120 V +10 % –15 % 50 Hz / 60 Hz
	200 V	Main circuit	A-frame to D-frame	Single/3-phase 200 V +10 % –15 % to 240 V +10 % –15 % 50 Hz / 60 Hz
			E-frame to H-frame	3-phase 200 V +10 % –15 % to 240 V +10 % –15 % 50 Hz / 60 Hz
		Control circuit	A-frame to D-frame	Single phase 200 V +10 % –15 % to 240 V +10 % –15 % 50 Hz / 60 Hz
			E-frame to H-frame	Single phase 200 V +10 % –15 % to 240 V +10 % –15 % 50 Hz / 60 Hz
Environment		temperature		Ambient temperature: 0 ˚C to 55 ˚C (free from freezing) Storage temperature: –20 ˚C to 65 ˚C (Max.temperature guarantee: 80 ˚C for 72 hours free from condensation*1)
		humidity		Both operating and storage : 20 %RH to 85 %RH (free from condensation*1)
		Altitude		Lower than 1000 m
		Vibration		5.88 m/s^2 or less, 10 Hz to 60 Hz
Control method				IGBT PWM Sinusoidal wave drive
Encoder feedback				23-bit (8388608 resolution) absolute encoder, 7-wire serial * When using it as an incremental system (not using multi-turn data), do not connect the battery for absolute encoder. Parameter Pr. 0.15 must be set to “1” (factory settings).
External scale feedback				A/B phase, homing signal differential input. Serial communication is also supported. Manufacturers that support serial communication scale: Fagor Automation S.Coop., HEIDENHAIN, Magnescale Co., Ltd., Mitutoyo Corporation Nidec Sankyo Corporation, Renishaw plc
Interface connector	Control signal		Input	Each 8 input can be assigned by the parameter.
			Output	Each 3 output can be assigned by the parameter.
	Analog signal		Output	2 outputs for analog monitors 1 and 2
	Pulse signal		Output	Line driver output for encoder pulses (A/B phase signal) or external scale pulses.
Communication		Realtime Express (RTEX)		Communication for transmission of a real-time operation command, the parameter setting, or the status monitoring.
		USB		USB interface to connect to computers (setup support software PANATERM) for parameter setting or status monitoring.
Safety terminal				Terminal to support safety function.
Front panel				(1) 7 segment LED (double digits) (2) Network status LED(LINK,COM) (3) Rotary switch for node address setting (4) Analog monitor output(Analog monitors 1 and 2)
Regeneration				Size A, B, G and H: Without built-in regenerative resistor (use external resistor) Size C to F: Built-in regenerative resistor (External regenerative resistor is also available)
Dynamic brake				A to G frame: built-in H frame: External resistor only
Control mode				(1) Semi-closed control Position control: Profile position control (PP), Cyclic position control (CP) Velocity control: Cyclic velocity control (CV) Torque control: Cyclic torque control (CT) (2) Full-closed control Position control: Profile position control (PP), Cyclic position control (CP) • The two modes, [1] and [2] above are switched by parameters. • Switch PP/CP/CV/CT mode according to the RTEX communication command.

*1 Air containing water vapor will become saturated with water vapor as the temperature falls, causing dew.

Function

Position control	Control input		Positive direction drive inhibit input, Negative direction drive inhibit, Latch signal, Near home position, etc
	Control output		Positioning completion etc.
	Position command input	Input mode	Command type by RTEX command
		Smoothing filter	Either a primary delay filter or a FIR type filter can be selected against command input.
	Damping control		Available (Up to 3 frequency settings,out of 4 settings in total,can be used simultaneously.)
	Model type damping filter		Available (2 filter available used simultaneously)
	Feed forward function		Available（speed/torque)
	Load variation suppression control		Available
	Gain 3 switching function		Available
	Quadrant glitch inhibit function		Available
	Two-degree-of-freedom control mode		Available
	Motor operatable setup function		Available
	External scale position information monitor		Available
	Other available functions		Friction torque compensation, Torque limit switching function, Torque saturation protection function, Single-turn absolute function, Continuous rotating absolute encoder function
Speed control	Control input		Positive direction drive inhibit input , Negative direction drive inhibit, Latch signal, etc
	Control output		At speed etc.
	Position command input	Input mode	Command type by RTEX command
	Soft start/slowdown function		0 s to 10 s / 1000 r/min Acceleration and deceleration can be set separately. S-curve acceleration/deceleration is also available.
	Feed forward function		Available（torque)
	Load variation suppression control		Available
	Two-degree-of-freedom control mode		Available（standard type)
	External scale position information monitor		Available
	Other available functions		Friction torque compensation, Torque limit switching function, Torque saturation protection function, Single-turn absolute function, Continuous rotating absolute encoder function
Torque control	Control input		Positive direction drive inhibit input, Negative direction drive inhibit, Latch signal, etc
	Control output		At speed etc.
	Position command input	Input mode	Command type by RTEX command
	Speed limit function		Speed limit value can be set by parameter. (Switched by RTEX command.)
	External scale position information monitor		Available
	Other available functions		Single-turn absolute function Continuous rotating absolute encoder function
Full-closed control	Control input		Positive direction drive inhibit input , Negative direction drive inhibit, Latch signal, Near home position , etc
	Control output		Positioning completion etc.
	Position command input	Input mode	Command type by RTEX command
		Smoothing filter	Either a primary delay filter or a FIR type filter can be selected against command input.
	Setting range of external scale division/multiplication.		1/40 times to 125200 times Although the ratio of the encoder pulse (numerator) and external scale pulse (denominator) can be set anywhere between the range of 1 to 2^{23} for the numerator and 1 to 2^{23} for the denominator, Please use within the range indicated above.
	Damping control		Available(Up to 3 frequency settings,out of 4 settings in total,can be used simultaneously.)
	Feed forward function		Available（speed/torque)
	Load variation suppression control		Available
	Gain 3 switching function		Available
	Hybrid vibration suppression function		Available
	Quadrant glitch inhibit function		Available
	Two-degree-of-freedom control mode		Available（standard type)
	Motor operatable setup function		Available
	External scale position information monitor		Available
	Other available functions		Friction torque compensation, Torque limit switching function, Torque saturation protection function
Common	Electronic gear ratio setting		Applicable scaling ratio: 1/1000 to 8000 Although any value of 1 to 2^{30} (numerator) and any value of 1 to 2^{30} (denominator) can be used,resulting value should be within the range shown above.
	Auto tuning		Identifies the load inertia real-time and automatically sets up the gain that meets the stiffness setting when the motor is running with upper and internal operation commands.
	Notch filter		Available (5 filters available)
	Gain switching function		Available
	2-step torque filter		Available
	Position comparison output function		Available
	Protective function		Over-voltage, under-voltage, over-speed, over-load, over-heat, over-current, encoder error, excess position deviation, EEPROM error etc.
	Alarm data trace back function		Tracing back of alarm data is available
	Deterioration diagnosis function		Available

A6NE series (Basic type) Position, Speed, Torque type

Basic Specifications	Input power	100 V	Main circuit	Single phase 100 V +10 % –15 % to 120 V +10 % –15 % 50 Hz / 60 Hz
			Control circuit	Single phase 100 V +10 % –15 % to 120 V +10 % –15 % 50 Hz / 60 Hz
		200 V	Main circuit: A-frame to D-frame	Single/3-phase 200 V +10 % –15 % to 240 V +10 % –15 % 50 Hz / 60 Hz
			Main circuit: E-frame, F-frame	3-phase 200 V +10 % –15 % to 240 V +10 % –15 % 50 Hz / 60 Hz
			Control circuit: A-frame to D-frame	Single phase 200 V +10 % –15 % to 240 V +10 % –15 % 50 Hz / 60 Hz
			Control circuit: E-frame, F-frame	Single phase 200 V +10 % –15 % to 240 V +10 % –15 % 50 Hz / 60 Hz
	Environment		temperature	Ambient temperature: 0 ˚C to 55 ˚C (free from freezing) Storage temperature: –20 ˚C to 65 ˚C (Max.temperature guarantee: 80 ˚C for 72 hours free from condensation*1)
			humidity	Both operating and storage : 20 %RH to 85 %RH (free from condensation*1)
			Altitude	Lower than 1000 m
			Vibration	5.88 m/s^2 or less, 10 Hz to 60 Hz
	Control method			IGBT PWM Sinusoidal wave drive
	Encoder feedback			23-bit (8388608 resolution) absolute encoder, 7-wire serial * When using it as an incremental system (not using multi-turn data), do not connect the battery for absolute encoder. Parameter Pr. 0.15 must be set to “1” (factory settings).
	Interface connector	Control signal	Input	Each 8 input can be assigned by the parameter.
			Output	Each 3 output can be assigned by the parameter.
		Analog signal	Output	2 outputs for analog monitors 1 and 2
		Pulse signal	Output	Line driver output for encoder pulses (A/B phase signal).
	Communication		Realtime Express (RTEX)	Communication for transmission of a real-time operation command, the parameter setting, or the status monitoring.
			USB	USB interface to connect to computers (setup support software PANATERM) for parameter setting or status monitoring.
	Front panel			(1) 7 segment LED (double digits) (2) Network status LED(LINK,COM) (3) Rotary switch for node address setting (4) Analog monitor output(Analog monitors 1 and 2)
	Regeneration			Size A and B: Without built-in regenerative resistor (use external resistor) Size C to F: Built-in regenerative resistor (External regenerative resistor is also available)
	Dynamic brake			A to F frame: built-in
	Control mode			(1) Semi-closed control Position control: Profile position control (PP), Cyclic position control (CP) Velocity control: Cyclic velocity control (CV) Torque control: Cyclic torque control (CT) • Switch PP/CP/CV/CT mode according to the RTEX communication command.

*1 Air containing water vapor will become saturated with water vapor as the temperature falls, causing dew.

Function	Position control	Control input	Positive direction drive inhibit input, Negative direction drive inhibit, Latch signal, Near home position , etc
		Control output	Positioning completion etc.
		Position command input: Input mode	Command type by RTEX command
		Position command input: Smoothing filter	Either a primary delay filter or a FIR type filter can be selected against command input.
		Damping control	Available(Up to 3 frequency settings,out of 4 settings in total,can be used simultaneously.)
		Model type damping filter	Available(2 filter available used simultaneously)
		Feed forward function	Available（speed/torque）
		Load variation suppression control	Available
		Gain 3 switching function	Available
		Quadrant glitch inhibit function	Available
		Two-degree-of-freedom control mode	Available
		Motor operatable setup function	Available
		Other available functions	Friction torque compensation, Torque limit switching function, Torque saturation protection function, Single-turn absolute function, Continuous rotating absolute encoder function
	Speed control	Control input	Positive direction drive inhibit input , Negative direction drive inhibit, Latch signal, etc
		Control output	At speed etc.
		Position command input: Input mode	Command type by RTEX command
		Soft start/slowdown function	0 s to 10 s / 1000 r/min Acceleration and deceleration can be set separately. S-curve acceleration/deceleration is also available.
		Feed forward function	Available（torque）
		Load variation suppression control	Available
		Two-degree-of-freedom control mode	Available（standard type）
		Other available functions	Friction torque compensation, Torque limit switching function, Torque saturation protection function, Single-turn absolute function, Continuous rotating absolute encoder function
	Torque control	Control input	Positive direction drive inhibit input, Negative direction drive inhibit, Latch signal, etc
		Control output	At speed etc.
		Position command input: Input mode	Command type by RTEX command
		Speed limit function	Speed limit value can be set by parameter. (Switched by RTEX command.)
		Other available functions	Single-turn absolute function Continuous rotating absolute encoder function
	Common	Electronic gear ratio setting	Applicable scaling ratio: 1/1000 to 8000 Although any value of 1 to 2^{30} (numerator) and any value of 1 to 2^{30} (denominator) can be used,resulting value should be within the range shown above.
		Auto tuning	Identifies the load inertia real-time and automatically sets up the gain that meets the stiffness setting when the motor is running with upper and internal operation commands.
		Notch filter	Available (5 filters available)
		Gain switching function	Available
		2-step torque filter	Available
		Position comparison output function	Available
		Protective function	Over-voltage, under-voltage, over-speed, over-load, over-heat, over-current, encoder error, excess position deviation, EEPROM error etc.
		Alarm data trace back function	Tracing back of alarm data is available
		Deterioration diagnosis function	Available

* All dimensions shown in this catalog are for the A6NF series, but outer dimensions are the same as the A6NE series.

A-frame

Unit [mm]

X1 : USB connector
X3 : Safety function connector
X2A : RTEX RX connector
X2B : RTEX TX connector
X4 : I/O connector
X5 : Feedback scale connector
X6 : Encoder connector
X7 : For analog monitor signal connection

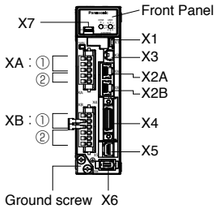

XA : ①Main power input terminals
②Control power input terminals
XB : ①Terminals for external regenerative resistor
②Terminals for motor connection

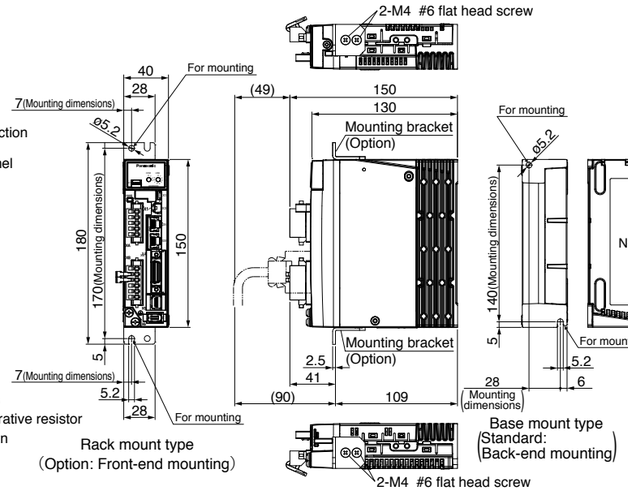

Rack mount type
(Option: Front-end mounting)

Base mount type
(Standard:
Back-end mounting)

A-frame: Connector of driver side			Multifunction type	Basic type
Connector XA	S05B-F32SK-GGXR (or equivalent)	J.S.T. Mfg. Co., Ltd.	●	●
Connector XB	S06B-F32SK-GGXR (or equivalent)	J.S.T. Mfg. Co., Ltd.	●	●
Connector X1	UB-M5BR-S14-4S (or equivalent)	J.S.T. Mfg. Co., Ltd.	●	●
Connector X3	CIF-HS08SS-071-TB (or equivalent)	J.S.T. Mfg. Co., Ltd.	●	–
Connector X2A	MOD-WRJ88LY1G-TP+ (or equivalent)	HTK	●	●
Connector X2B	MOD-WRJ88LY1G-TP+ (or equivalent)	HTK	●	●
Connector X4	DF02R026NA2 (or equivalent)	Japan Aviation Electronics Ind.	●	●
Connector X5	MUF-RS10SK-GKX-TB (or equivalent)	J.S.T. Mfg. Co., Ltd.	●	–
Connector X6	3E106-2230KV (or equivalent)	Sumitomo 3M	●	●
Connector X7	53398-8605 (5pin)	Molex	●	●

Mass: 0.8 kg

<Attached to the driver>

Connector of power and motor side		
Connector XA	05JFAT-SAXGGKK-A	J.S.T. Mfg. Co., Ltd.
Connector XB	06JFAT-SAXGGKK-A	J.S.T. Mfg. Co., Ltd.

B-frame

Unit [mm]

X1 : USB connector
X3 : Safety function connector
X2A : RTEX RX connector
X2B : RTEX TX connector
X4 : I/O connector
X5 : Feedback scale connector
X6 : Encoder connector
X7 : For analog monitor signal connection

XA : ①Main power input terminals
②Control power input terminals
XB : ①Terminals for external regenerative resistor
②Terminals for motor connection

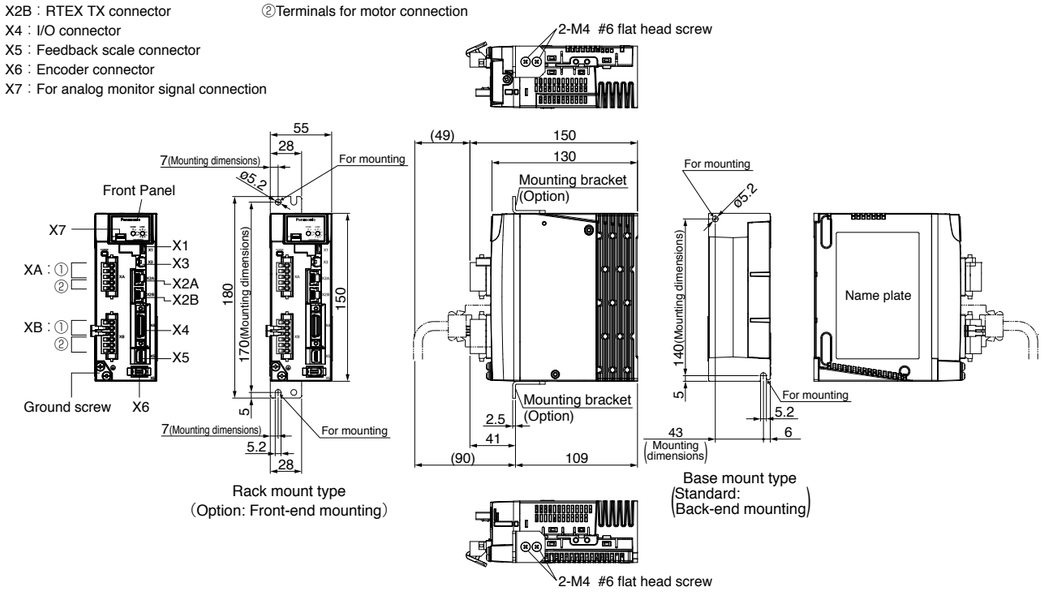

Rack mount type
(Option: Front-end mounting)

Base mount type
(Standard:
Back-end mounting)

* For connectors X1 to X7, refer to the list provided in the A-frame table because both frames use the same connectors.

Mass: 1.0 kg

C-frame

Unit [mm]

X1 : USB connector
X3 : Safety function connector
X2A : RTEX RX connector
X2B : RTEX TX connector
X4 : I/O connector
X5 : Feedback scale connector
X6 : Encoder connector
X7 : For analog monitor signal connection

XA : ①Main power input terminals
②Control power input terminals
XB : ①Terminals for external regenerative resistor
②Terminals for motor connection

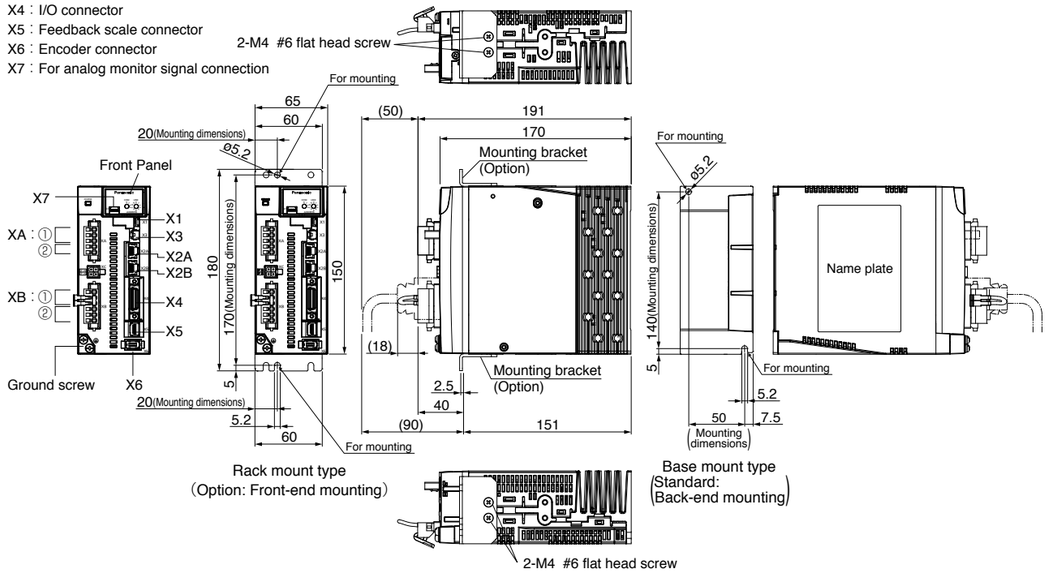

Rack mount type
(Option: Front-end mounting)

Base mount type
(Standard:
Back-end mounting)

* For connectors X1 to X7, refer to the list provided in the A-frame table because both frames use the same connectors.

Mass: 1.6 kg

D-frame (200 V)

Unit [mm]

X1 : USB connector
X3 : Safety function connector
X2A : RTEX RX connector
X2B : RTEX TX connector
X4 : I/O connector
X5 : Feedback scale connector
X6 : Encoder connector
X7 : For analog monitor signal connection

XA : ①Main power input terminals
②Control power input terminals
XB : ①Terminals for external regenerative resistor
②Terminals for motor connection

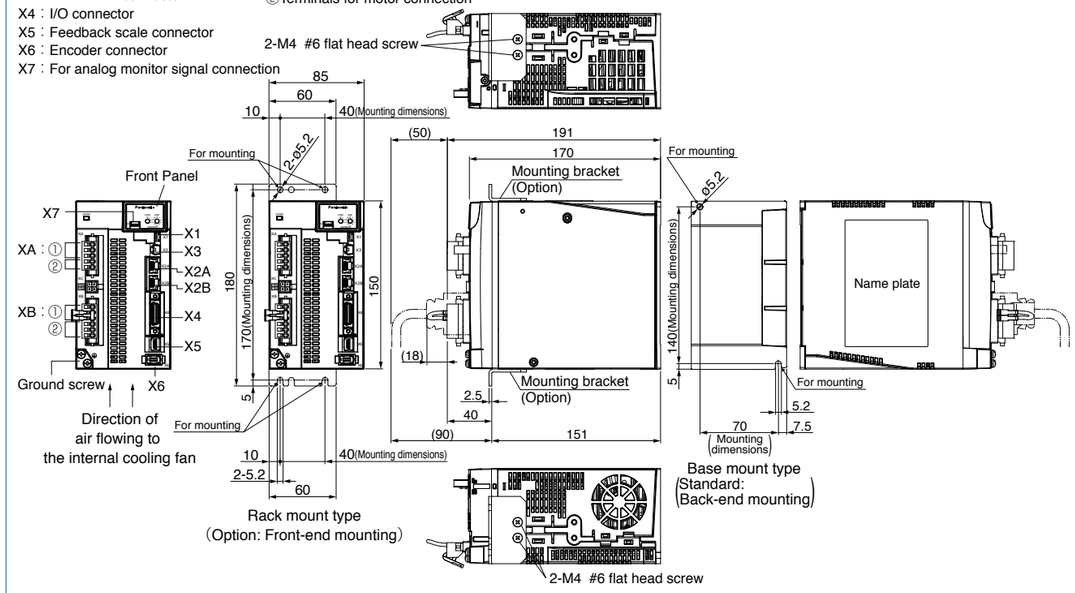

Rack mount type
(Option: Front-end mounting)

Base mount type
(Standard:
Back-end mounting)

* For connectors X1 to X7, refer to the list provided in the A-frame table because both frames use the same connectors.

Mass: 2.1 kg

* All dimensions shown in this catalog are for the A6NF series, but outer dimensions are the same as the A6NE series.

E-frame (200 V)

Unit [mm]

X1 : USB connector
X3 : Safety function connector
X2A : RTEX RX connector
X2B : RTEX TX connector
X4 : I/O connector
X5 : Feedback scale connector
X6 : Encoder connector
X7 : For analog monitor signal connection

XA : ①Main power input terminals
②Control power input terminals
XB : Terminals for motor connection
XC : Terminals for external regenerative resistor

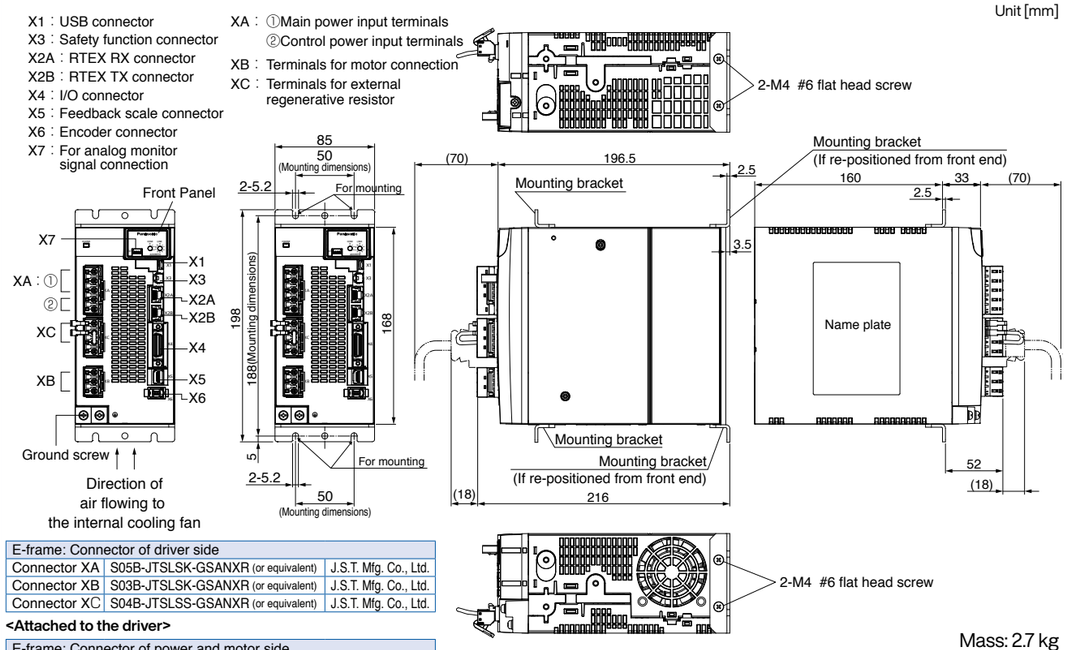

E-frame: Connector of driver side		
Connector XA	S05B-JTSLSK-GSANXR (or equivalent)	J.S.T. Mfg. Co., Ltd.
Connector XB	S03B-JTSLSK-GSANXR (or equivalent)	J.S.T. Mfg. Co., Ltd.
Connector XC	S04B-JTSLSS-GSANXR (or equivalent)	J.S.T. Mfg. Co., Ltd.

<Attached to the driver>

E-frame: Connector of power and motor side		
Connector XA	05JFAT-SAXGSA-L (or equivalent)	J.S.T. Mfg. Co., Ltd.
Connector XB	03JFAT-SAXGSA-L (or equivalent)	J.S.T. Mfg. Co., Ltd.
Connector XC	04JFAT-SAXGSA-L (or equivalent)	J.S.T. Mfg. Co., Ltd.

Mass: 2.7 kg

* For connectors X1 to X7, refer to the list provided in the A-frame table because both frames use the same connectors.

F-frame (200 V)

Unit [mm]

X1 : USB connector
X3 : Safety function connector
X2A : RTEX RX connector
X2B : RTEX TX connector
X4 : I/O connector
X5 : Feedback scale connector
X6 : Encoder connector
X7 : For analog monitor signal connection

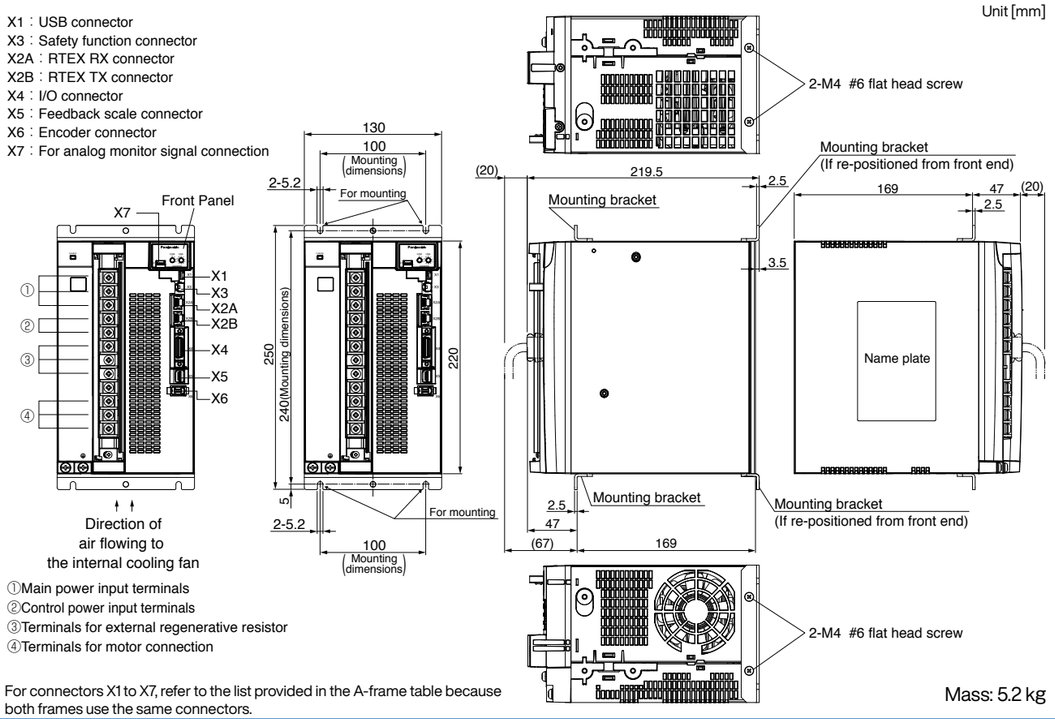

①Main power input terminals
②Control power input terminals
③Terminals for external regenerative resistor
④Terminals for motor connection

Mass: 5.2 kg

* For connectors X1 to X7, refer to the list provided in the A-frame table because both frames use the same connectors.

G-frame (200 V) (A6NE series are not available.)

Unit [mm]

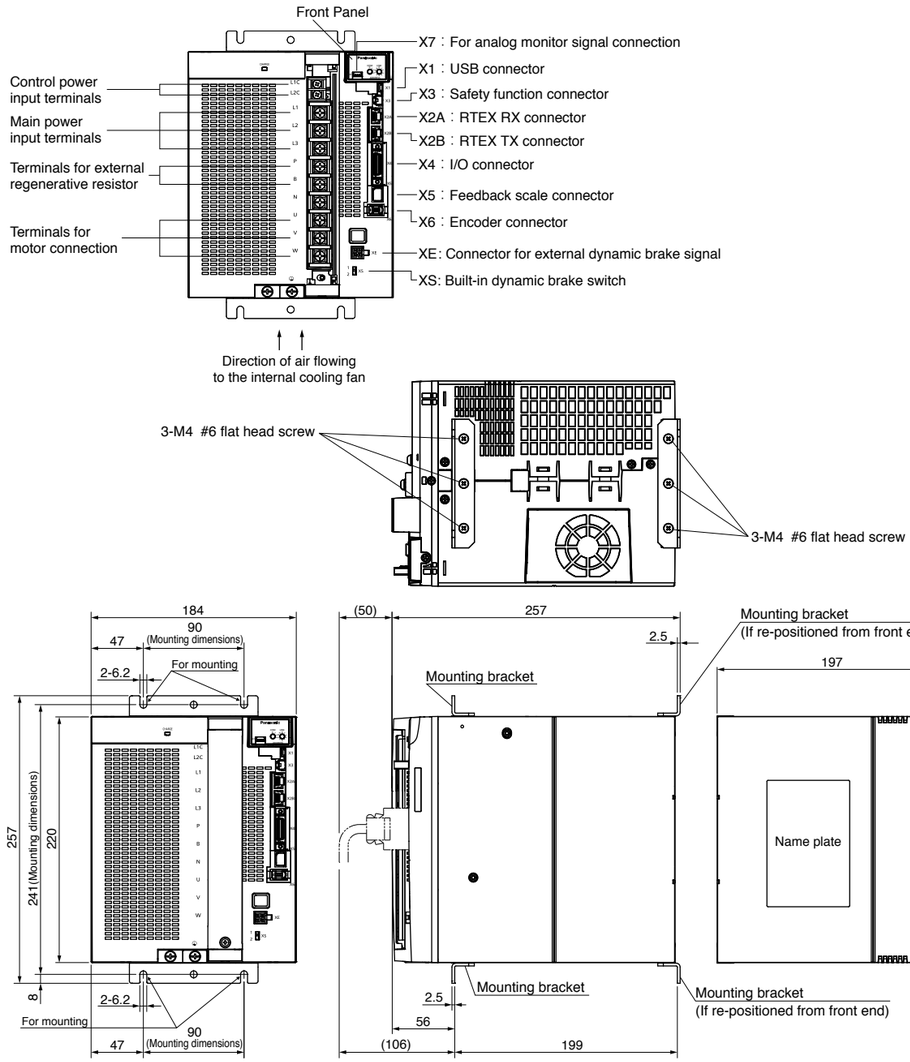

Connector of driver side	Controlor side (customer prepares)
Connector XE : 5569-04A2-210 (MOLEX)	Connector : 5557-04R-210 (MOLEX) Pin : 5556PBTL

Mass: 8.2 kg

* For connectors X1 to X7, refer to the list provided in the A-frame table because both frames use the same connectors.

H-frame (200 V) (A6NE series are not available.)

Unit [mm]

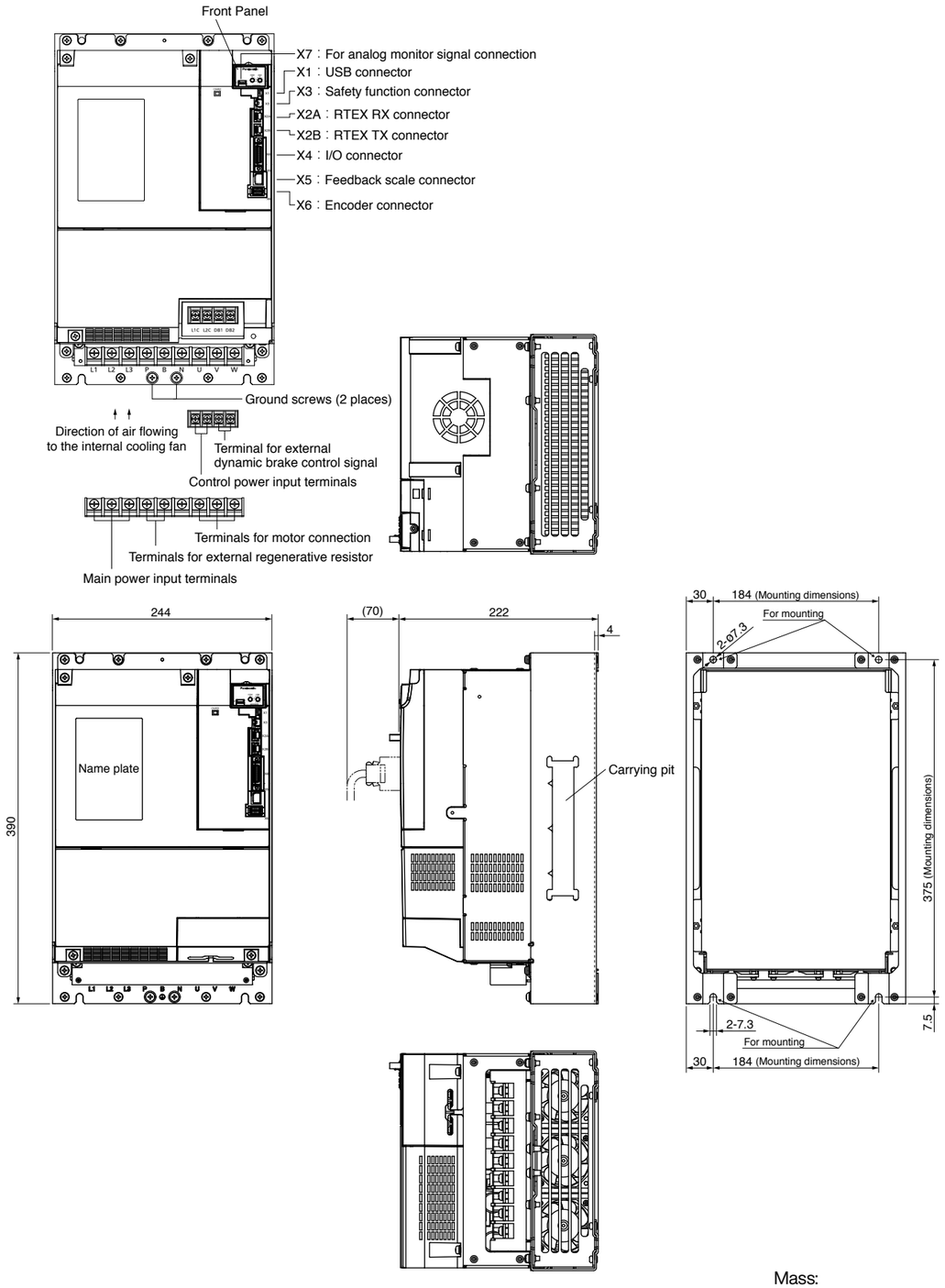

Mass:
MHDLTE3NF/ 14.2 kg
MHDLTF3NF/ 15.2 kg

* For connectors X1 to X7, refer to the list provided in the A-frame table because both frames use the same connectors.

Refer to P.29 to P.42 for other options than the interface cable and interface connector kit.

Cable for Interface

Part No.	DV0P0800	Cable length 2 m, core wire AWG 26 is connected.

• **Dimensions**

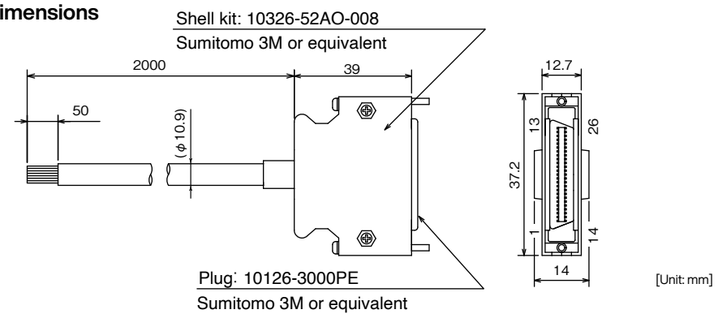

• Table for wiring

Pin No.	Signal name	color	Pin No.	Signal name	color	Pin No.	Signal name	color
1*	BRK-OFF+	Orange (Red1)	10*	HOME	Pink (Black1)	19	OB–/OCMP2–	Pink (Red2)
2*	BRK-OFF–	Orange (Black1)	11*	EXT2	Orange (Red2)	20	OB+/OCMP2+	Pink (Black2)
3*	ALM+	Gray (Red1)	12*	EXT3	Orange (Black2)	21	OCMP3+	Orange (Red3)
4*	ALM–	Gray (Black1)	13*	SI-MON4	Gray (Red2)	22	OCMP3–	Gray (Red3)
5*	SI-MON5	White (Red1)	14	BTP-I	Gray (Black2)	23	–	Gray (Black3)
6	I-COM	White (Black1)	15	BTN-I	White (Red2)	24	–	White (Red3)
7*	POT	Yellow (Red1)	16	GND	White (Black2)	25*	EX-OUT1+	White (Black3)
8*	NOT	Yellow (Black1)	17	OA+/OCMP1+	Yellow (Red2)	26*	EX-OUT1–	Orange (Black3)
9*	SI-MON1	Pink (Red1)	18	OA–/OCMP1–	Yellow (Black2)			

The signals allocated to the pin No. with " * " in the table are factory default.

<Remarks>
Color designation of the cable e.g.) Pin-1 Cable color : Orange (Red1) : One red dot on the cable

<Caution>
The shield of this cable is not connected to the terminal of the connector.
The shielded wire of the cable is connected to the connector shell of the cable, and is connected to the FG via the connector shell on the Driver side. When connecting the shielded wire of the cable to GND, use the connector kit DV0P0770 for the interface. At that time, please note that if you connect the shield and the connector shell on the cable side and process it, FG and GND will be connected.

Connector Kit for Interface

Part No.	DV0P0770

• **Components**

Title	Part No.	Number	Manufacturer	Note
Connector	10126-3000PE	1	Sumitomo 3M (or equivalent)	For CN X4 (26-pins)
Connector cover	10326-52A0-008	1		

• Pin disposition: Connector X4 (26 pins) (viewed from the soldering side)

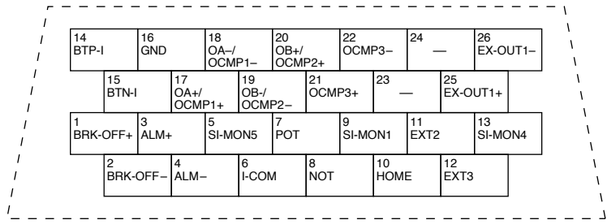

<Remarks>

1. Check the stamped pin-No. on the connector body while making a wiring.
2. For the symbols representing the signal names or the functions of the signals in the figure above, refer to the operation manual.

Servo driver with EtherCAT open network

EtherCAT

EtherCAT
AC servo motor & driver

MINAS **A6B Series** Special Order Product

A6BE Series
A6BF Series



Quickly Response frequency 3200 Hz & communication rate 100 Mbps enable fast and highly accurate operation.
Configurable even for motors with a maximum rotating speed 6500 r/min.*

* MHMF and MQMF types with a maximum wattage 400 W

Wisely New algorithm “Two-degree-of-freedom control method” is used to improve machining accuracy and productivity.

Easily Easy and speedy set-up with set-up support software “PANATERM”

● Fully-featured EtherCAT application (7 control modes, 32 origin-return modes, 2 synchronous modes, and an asynchronous mode.) ● Capable of system upgrade with various slaves. ● Capable of establishing PC-based systems without needing dedicated hardware. ● Planed to pass official EtherCAT Conformance Test. ● A6BF with safety I/F *2 corresponding to international standard, and A6BL/A6BM supporting linear motors *2 : IEC61800-5-2 STO, IEC61508 SIL3.

● The EtherCAT is a registered trademark of patented technology licensed from Beckhoff Automation GmbH in Germany.

INDEX

Features 369
Driver appearance 371
System configretion 371
Driver 372
Dimensions of driver 372

MINAS **A6B Series** **Model Designation** Special Order Product
For more information, please visit our website or request to our distributors separately.

Servo Driver

M	A	D	L	N	1	5	B	E	* * *
①			②	③	④	⑤	⑥	⑦	Special specifications

① Frame symbol

Symbol	Frame	Symbol	Frame
MAD	A-Frame	MED	E-Frame
MBD	B-Frame	MFD	F-Frame
MCD	C-Frame	MGD	G-Frame
MDD	D-Frame	MHD	H-Frame

② Series

Symbol	Series name
L	A6 Family

③ Safety Function *1

Symbol	Specifications
N	without the safety function
T	with the safety function

④ Max. current rating

Symbol	Current rating	Symbol	Current rating
0	6 A	9	80 A
1	8 A	A	100 A
2	12 A	B	120 A
3	22 A	C	160 A
4	24 A	E	240 A
5	40 A	F	360 A
8	60 A		

⑤ Supply voltage specifications

Symbol	Specifications
1	Single phase 100 V
3	3-phase 200 V
5	Single/3-phase 200 V

⑥ I/f specifications ⑦ Classification of type *1

Symbol (specification)	Symbol	Specification
B (EtherCAT)	E	Standard for rotary motor Special Order Product
	F	Multifunction for rotary motor Special Order Product
	L	Standard for linear/ DD motor Special Order Product
	M	Multifunction for linear/ DD motor Special Order Product

*1 Standard type (with a part number ending in E or L) has no safety function.
Multi-function type (with a part number ending in F or M) has a safety function.

Appearance/ System configuration

Appearance

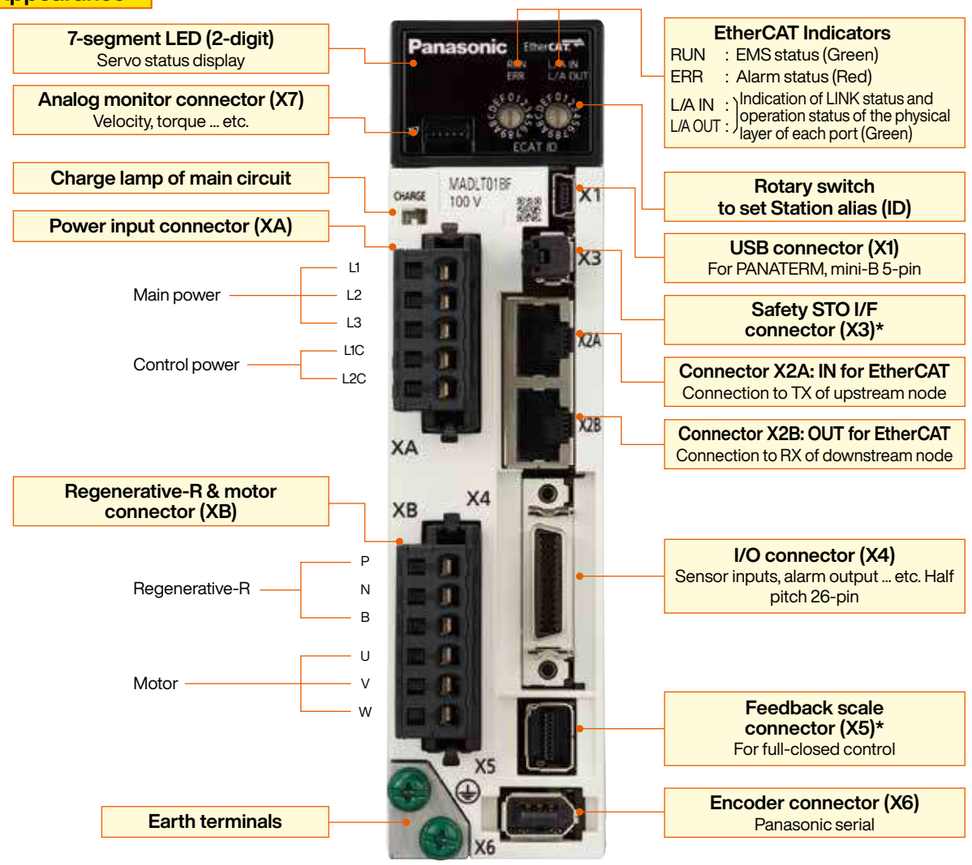

* The photo is A6BF series. There are no X3 and X5 connectors in the A6BE series.

Typical system configuration

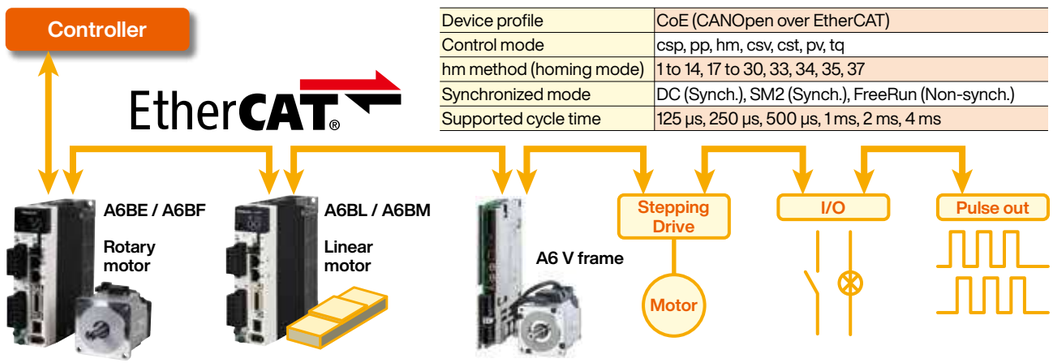

EtherCAT specification

Device profile	CoE (CANOpen over EtherCAT)
Control mode	csp, pp, hm, csv, cst, pv, tq
hm method (homing mode)	1 to 14, 17 to 30, 33, 34, 35, 37
Synchronized mode	DC (Synch.), SM2 (Synch.), FreeRun (Non-synch.)
Supported cycle time	125 µs, 250 µs, 500 µs, 1 ms, 2 ms, 4 ms

Applicable motor

Please refer to P.29 to P.42 of the A6 series.

Applicable option

Interface cable	DV0P0800
Interface connector kit	DV0P0770
Options other than interface cables and interface connectors	Please refer to P.29 to P.42 of the A6 series.

* Refer to P.368 of the A6N series for the "parallel I/O connector (X4)" option. The “signal names” and “pin assignments” for the parallel I/O connector (X4) option “interface cable” and “interface connector kit” are different from those described on P.368. For details, please refer to the specifications of the A6B series.

* All dimensions shown in this catalog are for the A6BF series, but outer dimensions are the same as the A6BE series.

A-frame

Unit [mm]

X1 : USB connector
X3 : Safety function connector
X2A : Connector X2A: IN for EtherCAT
X2B : Connector X2B: OUT for EtherCAT
X4 : I/O connector
X5 : Feedback scale connector
X6 : Encoder connector
X7 : For analog monitor signal connection

XA : ①Main power input terminals
②Control power input terminals
XB : ①Terminals for external regenerative resistor
②Terminals for motor connection

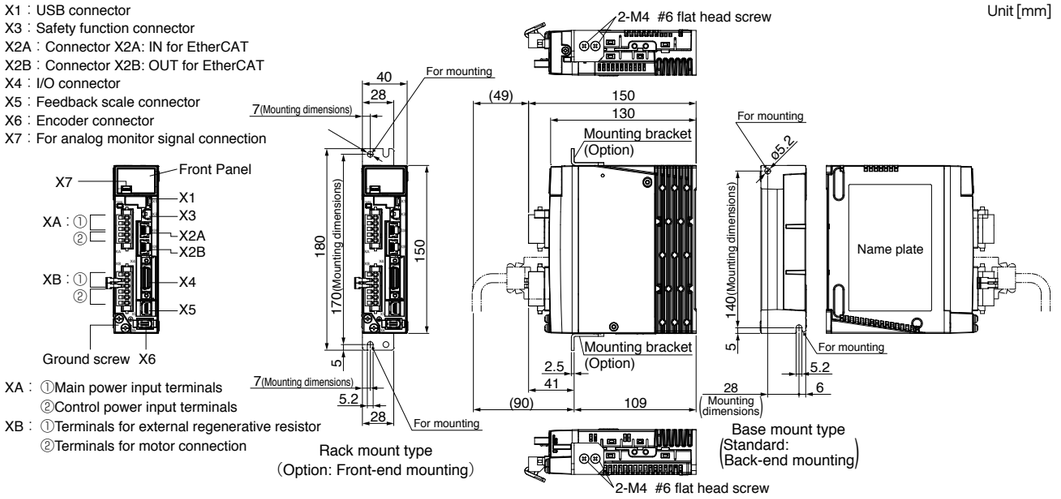

A-frame: Connector of driver side			Multifunction type	Basic type
Connector XA	S05B-F32SK-GGXR (or equivalent)	J.S.T. Mfg. Co., Ltd.	●	●
Connector XB	S06B-F32SK-GGXR (or equivalent)	J.S.T. Mfg. Co., Ltd.	●	●
Connector X1	UB-M5BR-S14-4S (or equivalent)	J.S.T. Mfg. Co., Ltd.	●	●
Connector X3	CIF-HS08SS-071-TB (or equivalent)	J.S.T. Mfg. Co., Ltd.	●	–
Connector X2A	MOD-WRJ88LY1G-TP+ (or equivalent)	HTK	●	●
Connector X2B	MOD-WRJ88LY1G-TP+ (or equivalent)	HTK	●	●
Connector X4	DF02R026NA2 (or equivalent)	Japan Aviation Electronics Ind.	●	●
Connector X5	MUF-RS10SK-GKX-TB (or equivalent)	J.S.T. Mfg. Co., Ltd.	●	–
Connector X6	3E106-2230KV (or equivalent)	Sumitomo 3M	●	●
Connector X7	53398-8605 (5pin)	Molex	●	●

Mass: 0.8 kg

<Attached to the driver>

Connector of power and motor side		
Connector XA	05JFAT-SAXGGKK-A	J.S.T. Mfg. Co., Ltd.
Connector XB	06JFAT-SAXGGKK-A	J.S.T. Mfg. Co., Ltd.

B-frame

Unit [mm]

X1 : USB connector
X3 : Safety function connector
X2A : Connector X2A: IN for EtherCAT
X2B : Connector X2B: OUT for EtherCAT
X4 : I/O connector
X5 : Feedback scale connector
X6 : Encoder connector
X7 : For analog monitor signal connection

XA : ①Main power input terminals
②Control power input terminals
XB : ①Terminals for external regenerative resistor
②Terminals for motor connection

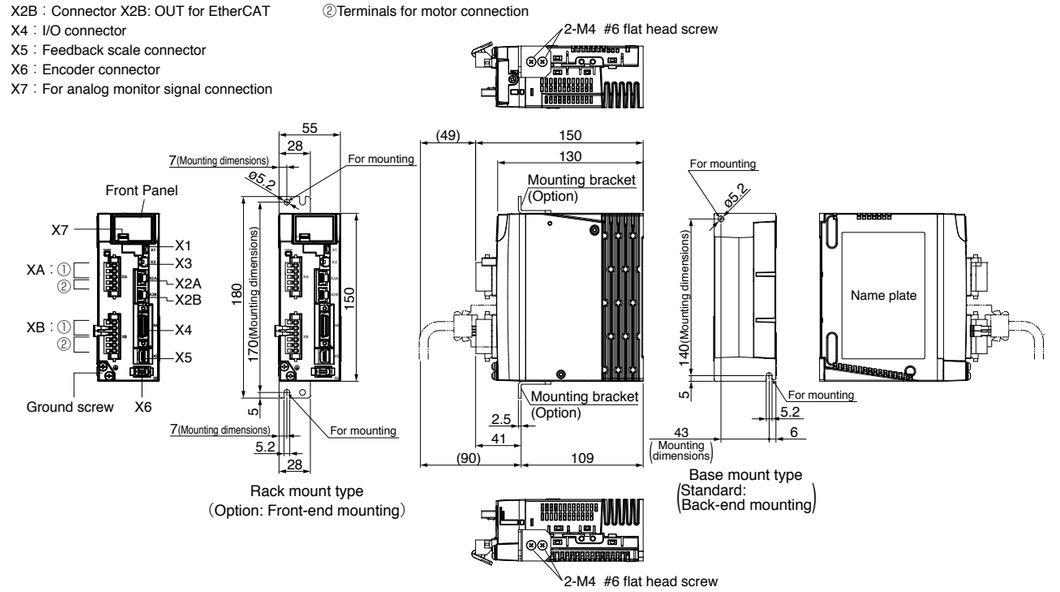

* For connectors X1 to X7, refer to the list provided in the A-frame table because both frames use the same connectors.

Mass: 1.0 kg

* All dimensions shown in this catalog are for the A6BF series, but outer dimensions are the same as the A6BE series.

C-frame

Unit [mm]

X1 : USB connector
X3 : Safety function connector
X2A : Connector X2A: IN for EtherCAT
X2B : Connector X2B: OUT for EtherCAT
X4 : I/O connector
X5 : Feedback scale connector
X6 : Encoder connector
X7 : For analog monitor signal connection

XA : ①Main power input terminals
②Control power input terminals
XB : ①Terminals for external regenerative resistor
②Terminals for motor connection

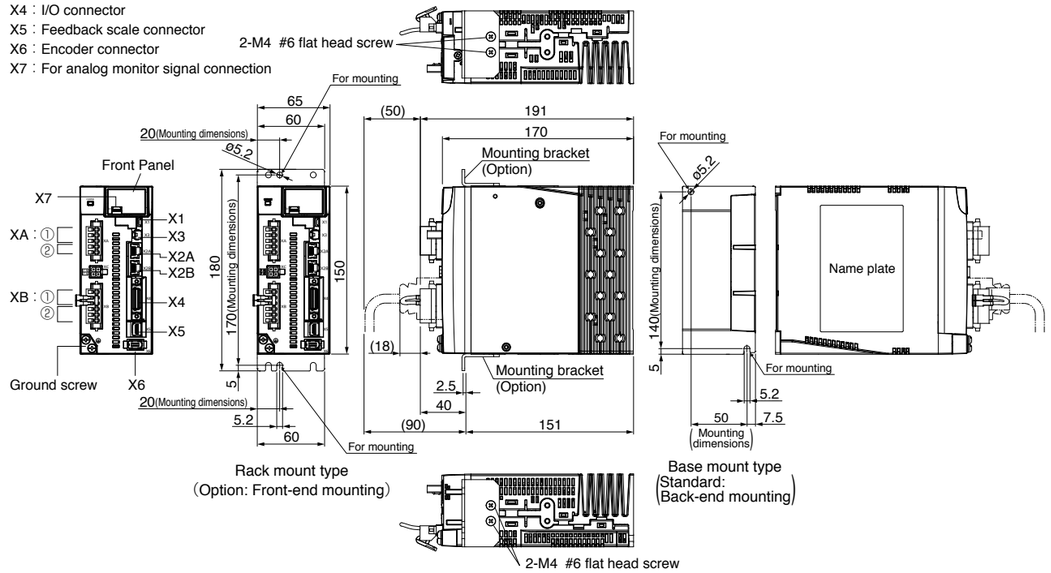

* For connectors X1 to X7, refer to the list provided in the A-frame table because both frames use the same connectors.

Mass: 1.6 kg

E-frame (200 V)

Unit [mm]

X1 : USB connector
X3 : Safety function connector
X2A : Connector X2A: IN for EtherCAT
X2B : Connector X2B: OUT for EtherCAT
X4 : I/O connector
X5 : Feedback scale connector
X6 : Encoder connector
X7 : For analog monitor signal connection

XA : ①Main power input terminals
②Control power input terminals
XB : Terminals for motor connection
XC : Terminals for external regenerative resistor

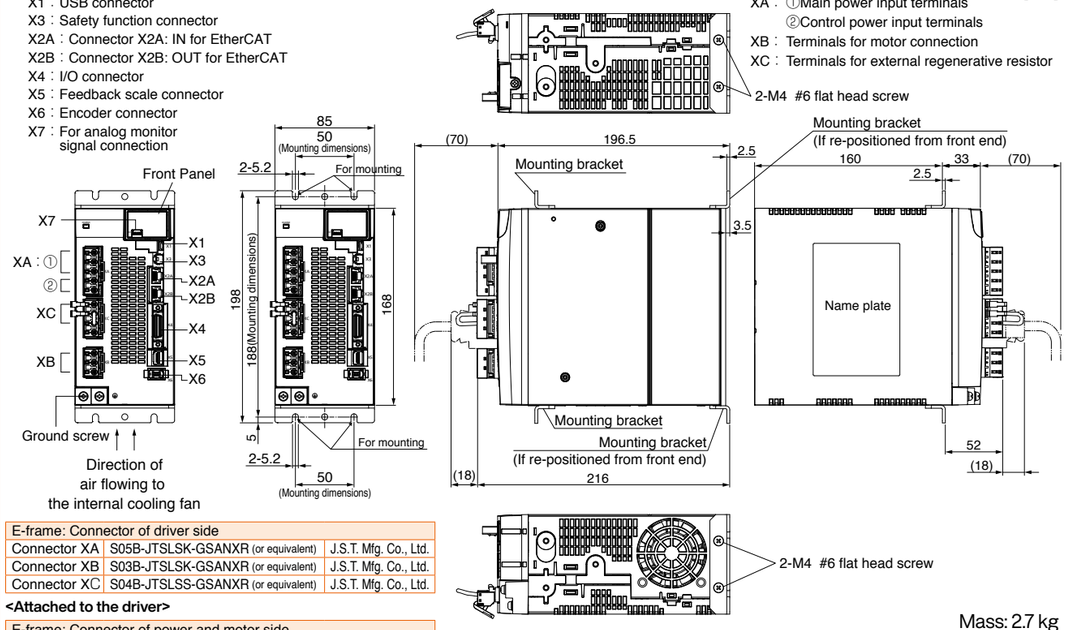

E-frame: Connector of driver side		
Connector XA	S05B-JTSLSK-GSANXR (or equivalent)	J.S.T. Mfg. Co., Ltd.
Connector XB	S03B-JTSLSK-GSANXR (or equivalent)	J.S.T. Mfg. Co., Ltd.
Connector XC	S04B-JTSLSS-GSANXR (or equivalent)	J.S.T. Mfg. Co., Ltd.

<Attached to the driver>

E-frame: Connector of power and motor side		
Connector XA	05JFAT-SAXGSA-L (or equivalent)	J.S.T. Mfg. Co., Ltd.
Connector XB	03JFAT-SAXGSA-L (or equivalent)	J.S.T. Mfg. Co., Ltd.
Connector XC	04JFAT-SAXGSA-L (or equivalent)	J.S.T. Mfg. Co., Ltd.

2-M4 #6 flat head screw

Mass: 2.7 kg

* For connectors X1 to X7, refer to the list provided in the A-frame table because both frames use the same connectors.

D-frame (200 V)

Unit [mm]

X1 : USB connector
X3 : Safety function connector
X2A : Connector X2A: IN for EtherCAT
X2B : Connector X2B: OUT for EtherCAT
X4 : I/O connector
X5 : Feedback scale connector
X6 : Encoder connector
X7 : For analog monitor signal connection

XA : ①Main power input terminals
②Control power input terminals
XB : ①Terminals for external regenerative resistor
②Terminals for motor connection

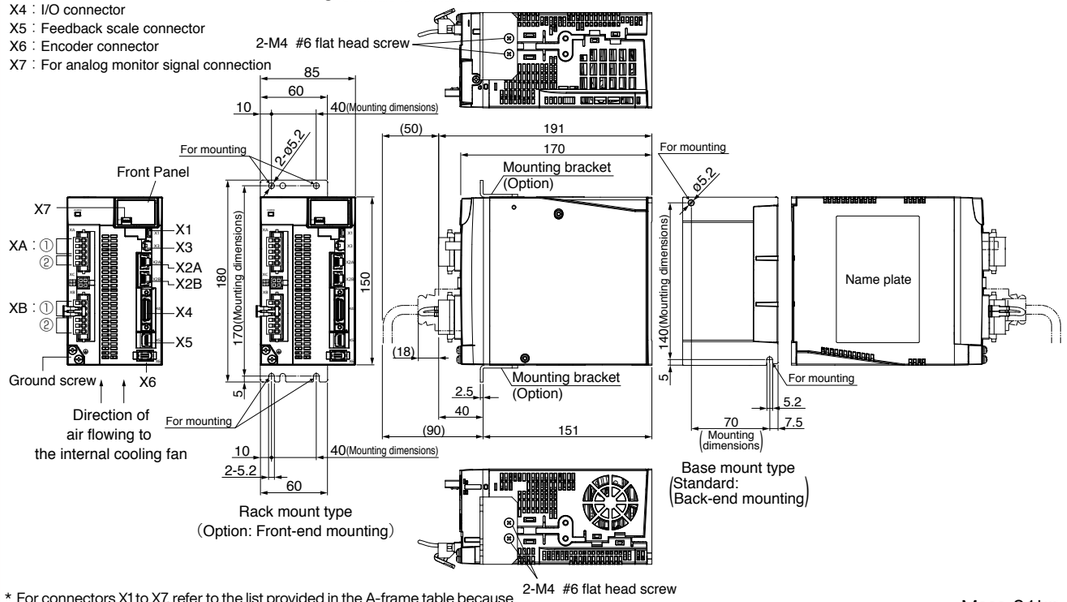

* For connectors X1 to X7, refer to the list provided in the A-frame table because both frames use the same connectors.

Mass: 2.1 kg

F-frame (200 V)

Unit [mm]

X1 : USB connector
X3 : Safety function connector
X2A : Connector X2A: IN for EtherCAT
X2B : Connector X2B: OUT for EtherCAT
X4 : I/O connector
X5 : Feedback scale connector
X6 : Encoder connector
X7 : For analog monitor signal connection

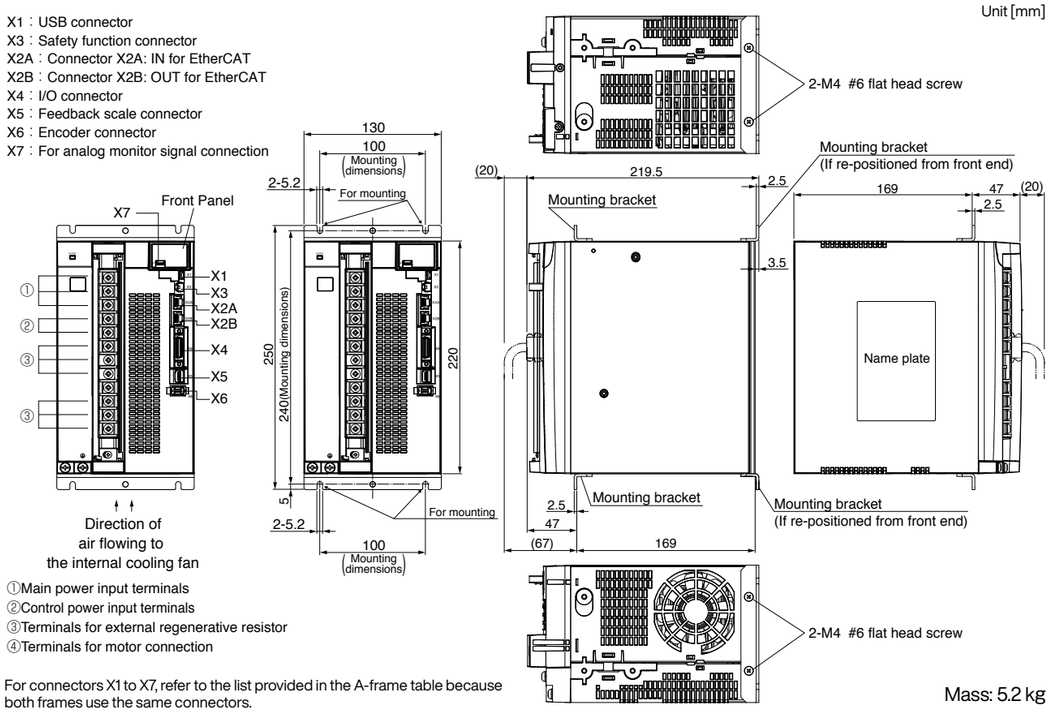

①Main power input terminals
②Control power input terminals
③Terminals for external regenerative resistor
④Terminals for motor connection

* For connectors X1 to X7, refer to the list provided in the A-frame table because both frames use the same connectors.

Mass: 5.2 kg

G-frame (200 V) (A6BE series are not available.)

Unit [mm]

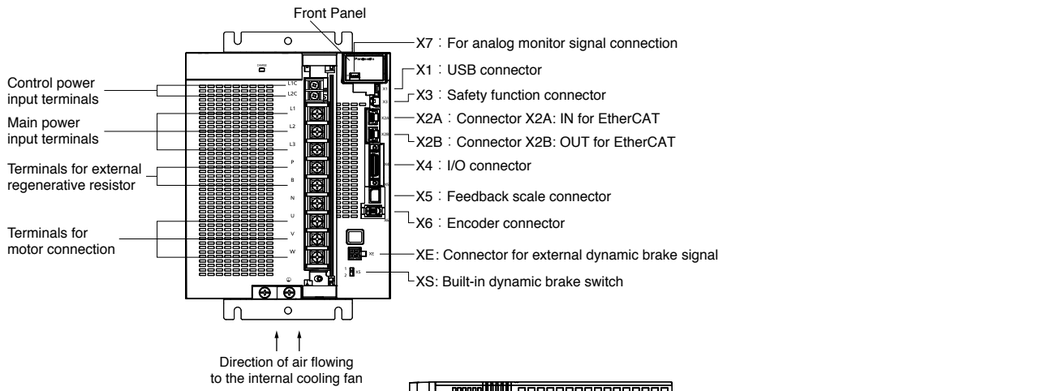

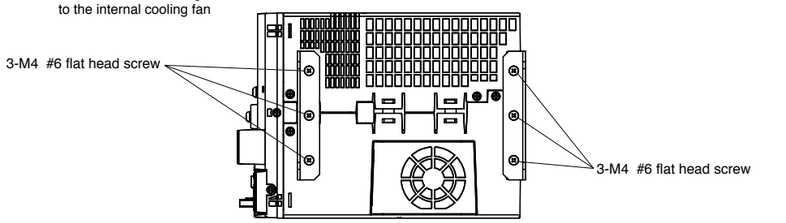

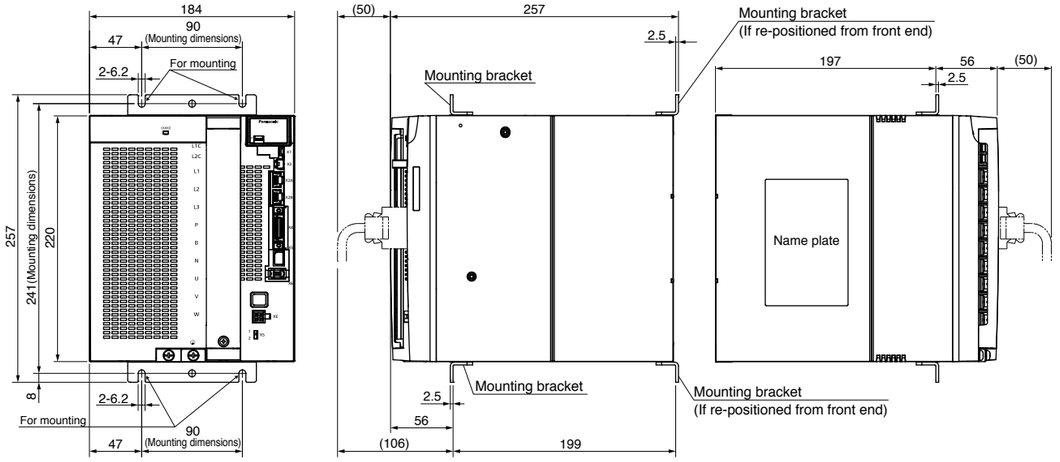

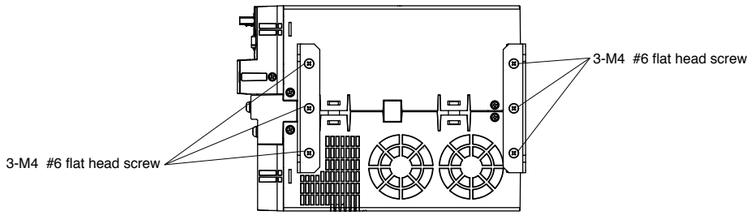

Connector of driver side	Controlor side (customer prepares)
Connector XE : 5569-04A2-210 (MOLEX)	Connector : 5557-04R-210 (MOLEX) Pin : 5556PBTL

* For connectors X1 to X7, refer to the list provided in the A-frame table because both frames use the same connectors.

Mass: 8.2 kg

H-frame (200 V) (A6BE series are not available.)

Unit [mm]

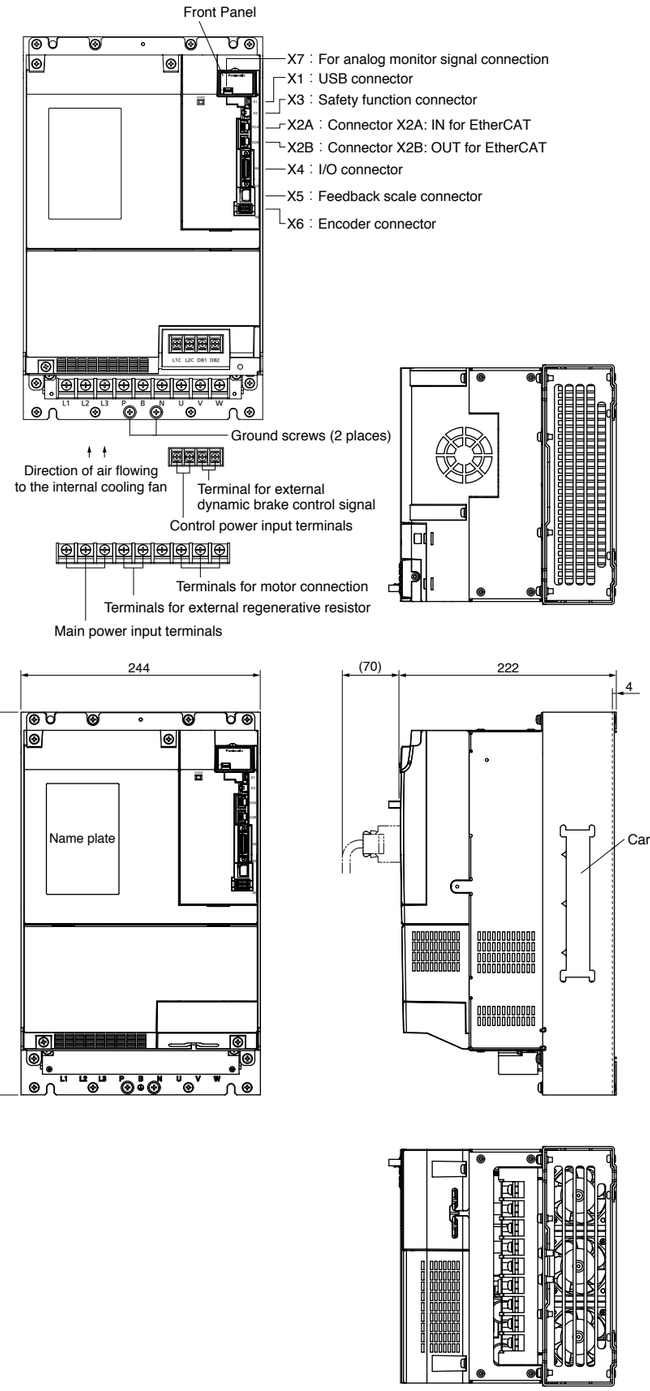

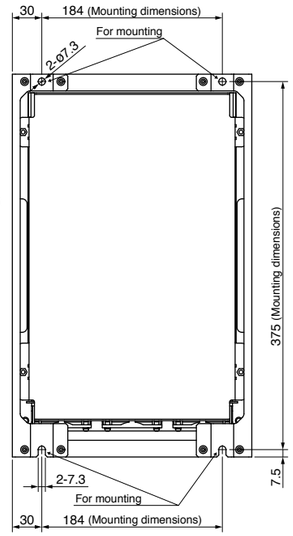

* For connectors X1 to X7, refer to the list provided in the A-frame table because both frames use the same connectors.

Mass:
MHDLTE3BF/ 14.2 kg
MHDLTF3BF/ 15.2 kg

Compact Servo Only for Position Control.

Ultra compact position control type

MINAS E Series

Last Order Date: April 30, 2025
After this date, we will no longer accept new orders for the product.

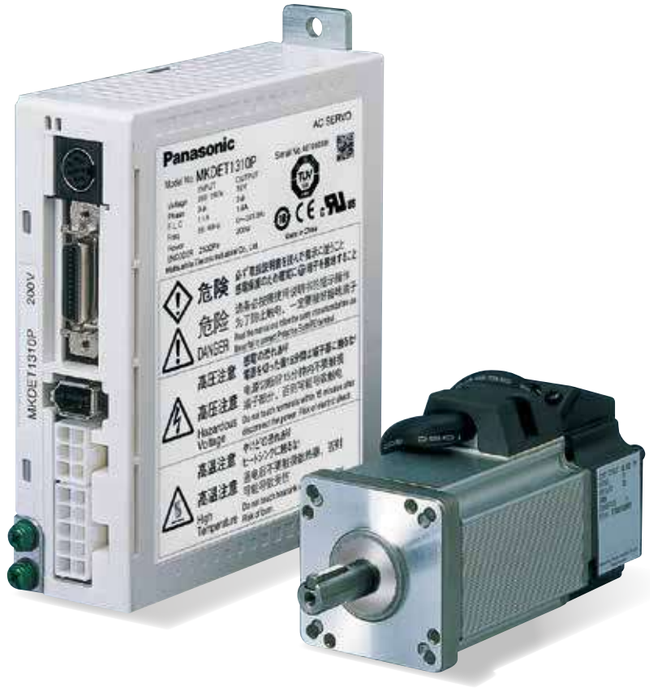

1 Best Fit to Small Drives

- Further evolution in down-sizing, by 47 % in size.(Note)
- Exclusively designed for position control.

(Note) Compared to MUDS043A1

2 Easy to Handle, Easy to Use

- DIN-rail mounting unit (option) improves handling/installation.
- User-friendly Console makes the setup easy.
- High functionality Real-Time Auto-Gain Tuning enables adjustment-free operation.



Console
Option

3 High-Speed Positioning with Resonance Suppression Filters

- Built-In notch filter suppresses resonance of the machine.
- Built-in adaptive filter detect resonance frequency and suppress vibration.

4 Smoother operation for Low Stiffness Machine

- Damping control function suppresses vibration during acceleration/deceleration

Contents

Features 377
Motor Line-up 381
Model Designation 382
Overall Wiring 383
Driver and List of Applicable Peripheral Devices 383
Driver 385
Driver Specifications 385
Standard Wiring Example of Main Circuit 386
Encoder Wiring Diagram 386
Control Circuit Standard Wiring Example 387
Dimensions of Driver 388
Motor 389
Specifications/Model designation/Torque Characteristics 389
Dimensions of Motor 393
Motors with Gear Reducer 394
Options 398
Setup Support Software 398
Cable part No. Designation 399
Cable Set 400
Encoder Cable 400
Motor Cable 400
Brake Cable 400
Connector Kit 401
Interface Cable 403
Communication Cable 403
Console 403
DIN Rail Mounting Unit 404
External Regenerative Resistor 404
Reactor 405
Surge Absorber for Motor Brake 405
List of Peripheral Devices 406

1. Easy to Handle, Easy to Use

High-functionality Real-Time Auto-Gain Tuning (Note 1)

- Offers real automatic gain tuning for low and high stiffness machines with a combination of an adaptive filter.
- Supports the vertical axis application where the load torque is different in rotational direction.

DIN-rail mounting unit (option)

- DIN-rail mounting unit allows parallel mounting with small control devices such as PLC.
- Easy to mount and easy to dismount.

2. Further Reduction of Vibration

Adaptive filter (Note1)

- Makes the notch filter frequency automatically follow the machine resonance frequency in real-time auto-gain tuning.
- Suppression of “Judder” noise of the machine, which is caused by variation of the machines or resonance frequency due to aging, can be expected.

Notch filter (Note1)

- 1-channel notch filter is equipped in the driver independent from adaptive filter.
- Each of 2 filters can set up frequency and notch width, and frequency in 1Hz unit. Suppression of "Judder" noise of the machine which has multiple resonance points can be expected.

Effect of notch filter

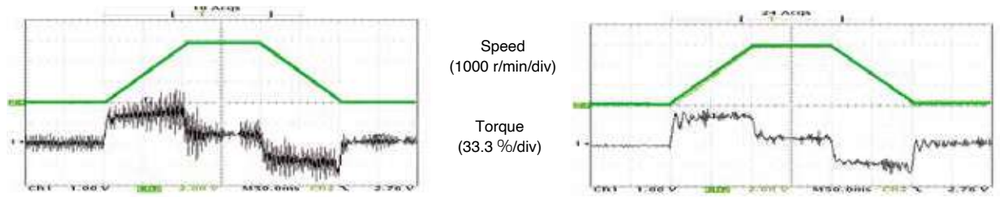

Damping control (Note1)

- You can suppress vibration occurring at both starting and stopping in low stiffness machine, by manually setting up vibration frequency in 0.1 Hz unit. Note) Only applies to manual adjustment

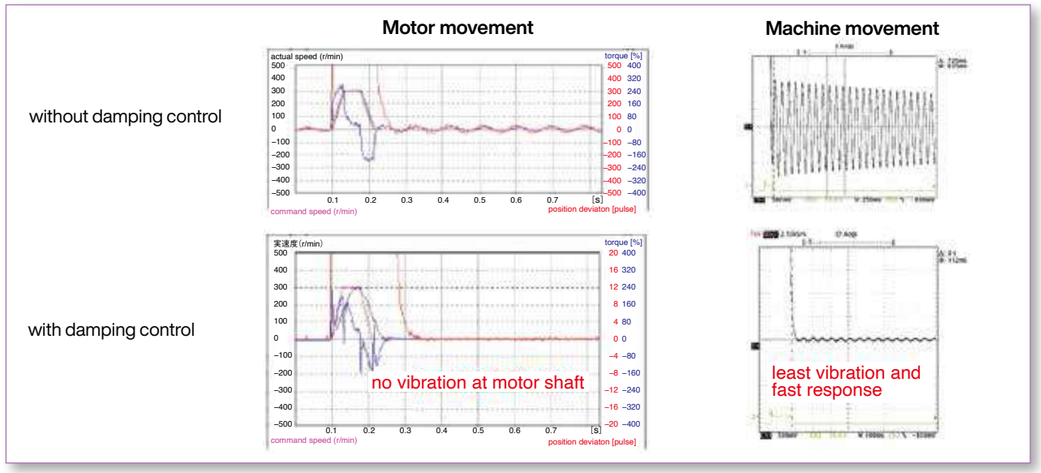

(Note1) Select at positioning action mode.

- At high speed positioning mode (Pr02=0) Select either one of notch filter, damping control or high-functionality real-time auto- gain tuning. Not possible to use them all at the same time. Adaptive filter cannot be used.
- At high-functionality positioning mode (Pr02=1) All of notch filter, damping control, high-functionality real-time auto-gain tuning and adaptive filter can be used at the same time.

3. Further Flexibility and Multiplicity

Console (Option)

- You can set up parameters, copy and make a JOG run.
- Convenient for maintenance at site.
- Refer to P.403, Options.

Command control modes

- Offers 2 command modes, “Position control” and “Internal velocity control”.
- You can make a 4-speed running at preset values with parameter at internal velocity control mode.

Inrush current suppressing function

- Inrush suppressing resistor, which prevent the circuit breaker shutdown of the power supply caused by inrush current at power-on, is equipped in this driver.
- Prevents unintentional shutdown of the power supply circuit breaker in multi axis application and does not give load to the power line.

Regeneration discharging function

- Discharges the regenerative energy with external resistor, where energy is generated while stopping the load with large moment of inertia, or use in up-down operation, and is returned to the driver from the motor.
- No regenerative resistor is installed in the driver.
- It is highly recommended to install an external regenerative resistor (option).

Built-in dynamic brake

- You can select the dynamic brake action which short the servo motor windings of U, V and W, at Servo-OFF, CW/CCW over- travel inhibition, power shutdown and trip.
- You can select the action sequence depending on the machine requirement.

Setup support software (Option)

- With the setup support software, “PANATERM” via RS232 / RS485 communication port, you can monitor the running status of the driver and set up parameters.

  Note) Refer to P.398 for setup support software.

Key-way shaft and tapped shaft end

- Easy pulley attachment and easy maintenance
- Attache screw to the tapped shaft to prevent key or pulley from being pulled out.

Wave-form graphic function

- With the setup support software, “PANATERM”, you can monitor the “Command speed”, “Actual speed”, “Torque”, “Position deviation” and “Positioning complete signal”.
- Helps you to analyze the machine and shorten the setup time.

  Note) Refer to P.398 for setup support software.

Frequency analyzing function

- You can confirm the response frequency characteristics of total machine mechanism including the servo motor with the setup support software, “PANATERM”.
- Helps you to analyze the machine and shorten the setup time.

  Note) Refer to P.398 for setup support software.

Torque limit switching function

- You can select 2 preset torque limit value from external input.
- Use this function for tension control or press-hold control.

Conformity to CE and UL Standards

Subject	Standard conformed		
Motor	IEC60034-1	IEC60034-5 UL1004 CSA22.2 No.100	Conforms to EU Low Voltage Directives/UK Low Voltage Regulation
Motor and driver		UL508C CSA22.2 No.14	
	EN55011	Radio Disturbance Characteristics of Industrial, Scientific and Medical (ISM) Radio-Frequency Equipment	Conforms to references by EU EMC Directives/UK EMC Regulation
	EN61000-6-2	Immunity for Industrial Environments	
	EC61000-4-2	Electrostatic Discharge Immunity Test	
	IEC61000-4-3	Radio Frequency Electromagnetic Field Immunity Test	
	IEC61000-4-4	Electric High-Speed Transition Phenomenon/Burst Immunity Test	
	IEC61000-4-5	Lightening Surge Immunity Test	
	IEC61000-4-6	High Frequency Conduction Immunity Test	
	IEC61000-4-11	Instantaneous Outage Immunity Test	

IEC : International Electrotechnical Commission
EN : Europaischen Normen
EMC : Electromagnetic Compatibility
UL : Underwriters Laboratories
CSA : Canadian Standards Association

Pursuant to at the directive 2004/108/EC,article 9(2)

* When exporting this product, follow statutory provisions of the destination country.

Motor Line-up

Motor series		Rated output (kW)	Rated rotational speed (Max. speed) (r/min)	Rotary encoder: 2500 P/r incremental	Rotary encoder: 17bit absolute/ incremental	Brake: Holding	Gear: High precision	UL/ CSA	Enclosure	Features	Applications
Ultra low inertia	MUMA 	0.05 to 0.4 0.05 0.1 0.2 0.4	3000 (5000)	○	–	○	○	○	IP65 Except shaft throughhole and connector	Small capacity Ultra low inertia	SMT machines Inserters High repetitive positioning application

Model Designation

Servo Motor

M U M A 5 A Z P 1 S * *

Special specifications

Symbol	Series
MUMA	Ultra low inertia (50 W to 400 W)

Motor structure

Symbol	Shaft	Holding brake		Oil seal	
	Key-way, center tap	without	with	without	with*
S	●	●		●	
T	●		●	●	

* Motor with oil seal is manufactured by order.

Motor rated output

Symbol	Rated output
5A	50 W
01	100 W
02	200 W
04	400 W

Voltage specifications

Symbol	Specifications
1	100 V
2	200 V
Z	100 V/200 V common (50 W only)

Design order

Symbol	Specifications
1	Standard

Rotary encoder specifications

Symbol	Format	Pulse counts	Resolution	Wires
P	Incremental	2500 P/r	10000	5

See P.389 for motor specifications

Motor with gear reducer

M U M A 0 1 1 P 3 1 N

Symbol	Series
MUMA	Ultra low inertia (100 W to 400 W)

Motor rated output

Symbol	Rated output
01	100 W
02	200 W
04	400 W

Gear reduction ratio, gear type

Symbol	Gear reduction ratio	Motor output (W) 100	200	400	Gear type
1N	1/5	●	●	●	For high accuracy
2N	1/9	●	●	●	
4N	1/25	●	●	●	

Voltage specifications

Symbol	Specifications
1	100 V
2	200 V

Motor structure

Symbol	Shaft	Holding brake	
	Key-way	without	with
3	●	●	
4	●		●

Rotary encoder specifications

Symbol	Format	Pulse counts	Resolution	Wires
P	Incremental	2500 P/r	10000	5

See P.394 for motor with gear reducer specifications

Servo Driver

M K D E T 1 3 1 0 P * *

Special specifications

Control mode

Symbol	Specifications
P	Pulse train

Current detector current rating

Symbol	Current rating
05	5 A
10	10 A

Frame symbol

Symbol	Frame
MKDE	E series, K-frame
MLDE	E series, L-frame

Power device Max. current rating

Symbol	Current rating
T1	10 A
T2	15 A

Supply voltage specifications

Symbol	Specifications
1	Single phase, 100 V
2	Single phase, 200 V
3	3-phase, 200 V
5	Single/3-phase, 200 V

See P.385 for driver specifications

· Wiring of main circuit

Circuit Breaker (MCCB)
Protects the power lines.
Shuts off the circuit when overcurrent passes.

Noise Filter (NF)
Prevents external noise from the power lines. And reduces an effect of the noise generated by the servo driver.

Magnetic Contactor (MC)
Turns on/off the main power of the servo driver.
Surge absorber to be used together with this.

Reactor (L)
Reduces harmonic current of the main power.

Pin-5 and Pin-3 of CN POWER
- Connect an external regenerative resistor (option) between P(pin-5) and B(pin-3) of connector, CN X1, when regenerative energy is large. (Refer to P.404 for regenerative resistor.)

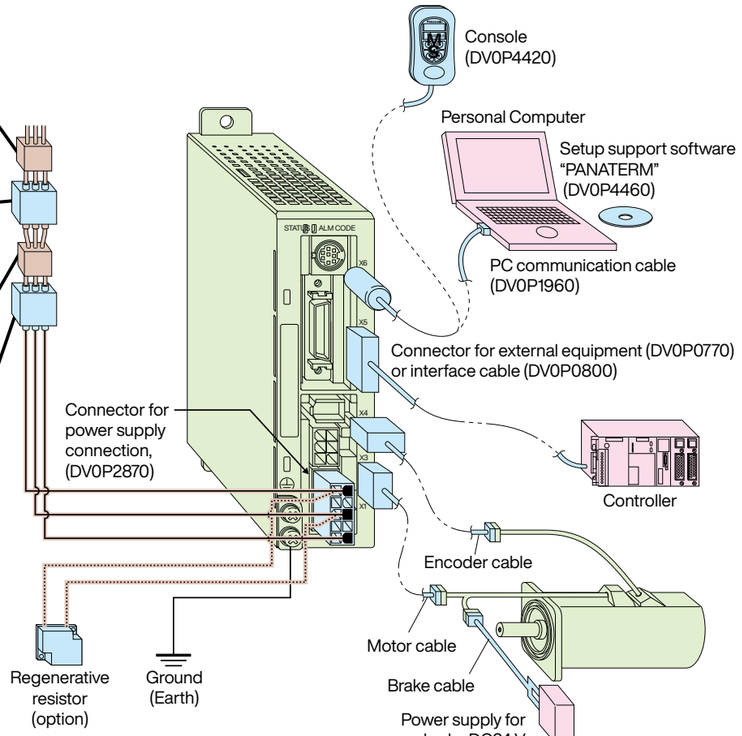

Motor to P.389
Driver to P.385
Option to P.398
Recommended equipments
Parts customer to prepare

List of recommended peripheral devices

Power supply	Motor Series	Motor Output	Power capacity (at rated output)	Circuit Breaker (Rated current)	Noise Filter	Magnetic Contactor Contact Composition	Wire diameter (L1, L2, L3, U, V and W)
Single phase, 100 V	MUMA	50 W	0.3 kVA	5 A	DV0P4160	10 A (3P+1a)	0.75 mm² to 0.85 mm² AWG18
		100 W	0.4 kVA				
		200 W	0.5 kVA	10 A			
Single phase, 200 V		50 W	0.3 kVA	5 A		15 A (3P+1a)	
		100 W					
		200 W	0.5 kVA				
		400 W	0.9 kVA	10 A			
3-phase 200 V		50 W	0.3 kVA	5 A		10 A (3P+1a)	
		100 W					
		200 W	0.5 kVA				
		400 W	0.9 kVA	10 A			

∗ Select the single and 3-phase common specifications corresponding to the power supplies.
- To conform to EU Directives/UK Regulation, install a circuit breaker which conforms to IEC and UL Standards (Listed, UL marked) between noise filter and power supply.
- For details of the noise filters, refer to 416.

<Remarks>
- Use a copper conductor cables with temperature rating of 60 ˚C or higher for main power connector and ground terminal wiring.
  Use a cable for ground with diameter of 2.0 mm² (AWG14) or larger.

Fastening torque list

Ground terminal screw		Connector to host controller[X5]	
Nominal size	Fastening torque (N•m)(Note 3)	Nominal size	Fastening torque (N•m)(Note 3)
M4	0.7～0.8	M2.6	0.2±0.05

(Note 3) **<Caution>**
- Applying fastening torque larger than the maximum value may result in damage to the product.

<Remarks>
- To check for looseness, conduct periodic inspection of fastening torque once a year.

Carrying page

Options		Part No.	Carrying page
Console		DV0P4420	403
Setup Support Software, PANATERM	Japanese	DV0P4460	398
	English		
RS232 Communication Cable (for Connection with PC)		DV0P1960	403
Interface Cable		DV0P0800	403
Connector Kit for Interface		DV0P0770	402
Connector Kit for Motor and Encoder		DV0P3670	401
Connector Kit for Driver Power Supply		DV0P2870	401
Encoder Cable	MFECA0 ∗ ∗ 0EAM		400
Motor Cable	MFMCA0 ∗ ∗ 0AEB		400
Brake Cable	MFMCB0 ∗ ∗ 0GET		400
Cable Set (3 m) (Note 4)	DV0P37300		400
Cable Set (5 m) (Note 4)	DV0P39200		400
DIN Rail Mount Unit	DV0P3811		404
External Regenerative Resistor	100 V	50 Ω 10 W	DV0P2890	404
	200 V	100 Ω 10 W	DV0P2891	
Reactor		100 V	DV0P227	405
			DV0P228	
		200 V	DV0P220	
Noise Filter			DV0P4160	416
Surge Absorber	Single phase 100 V, 200 V		DV0P4190	416
	3-phase 200 V		DV0P1450	
Ferrite core			DV0P1460	416

(Note 4) Cable set (3 m) contains,
1) Interface cable: DV0P0800
2) Encoder cable (3 m) : MFECA0030EAM
3) Motor cable (3 m) : MFMCA0030AEB
4) Connector kit for driver power supply connection : DV0P2870
Cable set (5 m) contains,
1) Interface cable: DV0P0800
2) Encoder cable (5 m) : MFECA0050EAM
3) Motor cable (5 m) : MFMCA0050AEB
4) Connector kit for driver power supply connection : DV0P2870

Table of Part Numbers and Options

Power supply	Output (W)	2500P/r, Incremental Motor Note) 1	Rating/Spec. (page)	Driver	Dimensions (Frame symbol)	Option Encoder Cable Note) 2	Motor Cable Note) 2		Brake Cable Note) 2	External Regenerative Resistor	Reactor	Noise Filter
Single phase 100 V	50	MUMA5AZP1 □	389	MKDET1105P	388（K）	MFECA0∗∗0EAM	MFMCA0∗∗0AEB		MFMCB0∗∗0GET	DV0P2890	DV0P227	DV0P4160
	100	MUMA011P1 □	389	MKDET1110P	388（K）							
	200	MUMA021P1 □	389	MLDET2110P	388（L）						DV0P228	
Single phase 200 V	50	MUMA5AZP1 □	391	MKDET1505P	388（K）					DV0P2891	DV0P220	
	100	MUMA012P1 □	391	MKDET1505P	388（K）							
	200	MUMA022P1 □	391	MLDET2210P	388（L）							
	400	MUMA042P1 □	391	MLDET2510P	388（L）							
3-phase 200 V	50	MUMA5AZP1 □	391	MKDET1505P	388（K）							
	100	MUMA012P1 □	391	MKDET1505P	388（K）							
	200	MUMA022P1 □	391	MKDET1310P	388（K）							
	400	MUMA042P1 □	391	MLDET2510P	388（L）							
				MLDET2310P								

Note) 1 Motor model number suffix: □
S : Key way with center tap, without brake
T : Kew way with center tap, with brake
Note) 2 ∗ ∗ represents cable length. For details, refer to P.399.

Basic Specifications	Input power	Single phase, 100 V	Single phase, 100 V to 115 V +10 % –15 % 50 Hz/60 Hz
		Single phase, 200 V	Single phase, 200 V to 240 V +10 % –15 % 50 Hz/60 Hz
		3-phase, 200 V	3-phase, 200 V to 240 V +10 % –15 % 50 Hz/60 Hz
	Environment	Temperature	Operating : 0 ˚C to 55 ˚C, Storage : –20 ˚C to 65 ˚C (Max.temperature guarantee 80 ˚C for 72 hours <Nomal temperature>)
		Humidity	Both operating and storage : 90 %RH or less (free from condensation)
		Altitude	1000 m or lower
		Vibration	5.88 m/s^2 or less, 10 Hz to 60 Hz (No continuous use at resonance frequency)
	Withstand voltage		Should be 1500 VAC (Sensed current: 20 mA) for 1 minute between Primary and Ground.
	Control method		IGBT PWM Sinusoidal wave drive
	Encoder feedback		2500 P/r (10000 resolution) incremental encoder
	Control signal	Input	7 inputs (1) Servo-ON, (2) Alarm clear and other inputs vary depending on the control mode.
		Output	4 outputs (1) Servo alarm, (2) Alarm, (3) Release signal of external brake and other outputs vary depending on the control mode.
	Pulse signal	Input	2 inputs Supports both line driver I/F and open collector I/F.
		Output	4 outputs Feed out the encoder pulse (A, B and Z-phase) in line driver. Z-phase pulse is also feed out in open collector.
	Communication function	RS232	1 : 1 communication to a host with RS232 interface is enabled.
	Display LED		(1) Status LED (STATUS), (2) Alarm code LED (ALM-CODE)
	Regeneration		No built-in regenerative resistor (external resistor only)
	Dynamic brake		Built-in
	Control mode		3 modes of (1) High-speed position control, (2) Internal velocity control and (3) High-functionality positioning control are selectable with parameter.
Functions	Position control	Control input	(1) CW over-travel inhibition, (2) CCW over-travel inhibition, (3) Deviation counter clear, (4) Gain switching, (5) Electronic gear switching
		Control output	(1) Positioning complete (In-position)
		Pulse input: Max. command pulse frequency	Line driver : 500 kpps, Open collector : 200 kpps
		Pulse input: Type of input pulse train	Differential input. Selectable with parameter, ((1) CW/CCW, (2) A and B-phase, (3) Command and Direction)
		Pulse input: Electronic gear (Division/Multiplication of command pulse)	Setup of electronic gear ratio Setup range of (1-10000) × $2^{(0-17)}$/(1-10000)
		Pulse input: Smoothing filter	Primary delay filter or FIR type filter is selectable to the command input.
	Internal speed control	Control input	(1) CW over-travel inhibition, (2) CCW over-travel inhibition, (3) Selection 1 of internal command speed, (4) Selection 2 of internal command speed, (5) Speed zero clamp
		Control output	(1) Speed arrival (at-speed)
		Internal speed command	Internal 4-speed is selectable with control input.
		Soft-start/down function	Individual setup of acceleration and deceleration are enabled, with 0 s to 10 s/1000 r/min. Sigmoid acceleration/deceleration is also enabled.
		Zero-speed clamp	0-clamp of internal speed command with speed zero clamp input is enabled.
	Common	Auto-gain tuning: Real-time	Estimates the load inertia in real-time in actual operation and sets up the gain automatically corresponding to the machine stiffness. Useable at (1) High-response position control, (2) Internal speed control and (3) High-functionality position control.
		Auto-gain tuning: Normal mode	Estimates the load inertia with an action command inside of the driver, and sets up the gain automatically corresponding to setup of the machine stiffness. Useable at (1) High-response position control, (2) Internal speed control and (3) High-functionality position control.
		Masking of unnecessary input	Masking of the following input signal is enabled. (1) Over-travel inhibition, (2) Speed zero clamp, (3) Torque limit switching
		Division of encoder feedback pulse	1 P/r to 2500 P/r (encoder pulses count is the max.).
		Protective function: Hardware error	Over-voltage, under-voltage, over-speed over-load, over-heat, over-current and encoder error etc.
		Protective function: Software error	Excess position deviation, command pulse division error, EEPROM error etc.
		Traceability of alarm data	Traceable up to past 14 alarms including the present one.
		Damping control function	Manual setup with parameter
		Setup: Manual	Console
		Setup: Setup support software	PANATERM (Supporting OS : Windows98, Windows ME, Windows2000, and WindowsXP)

Standard Wiring Example of Main Circuit

3-Phase, 200 V

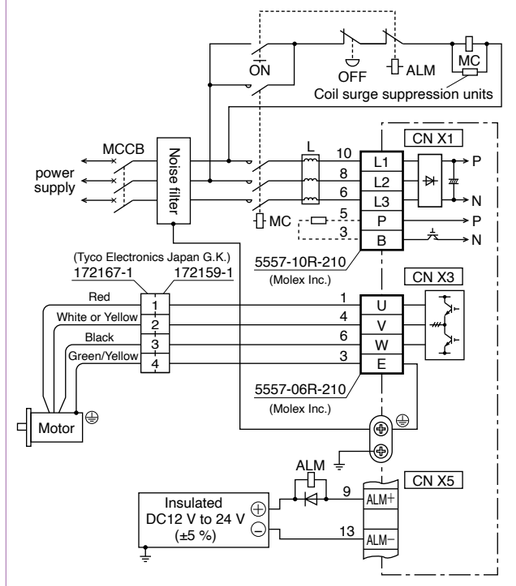

Single Phase, 100 V / 200 V

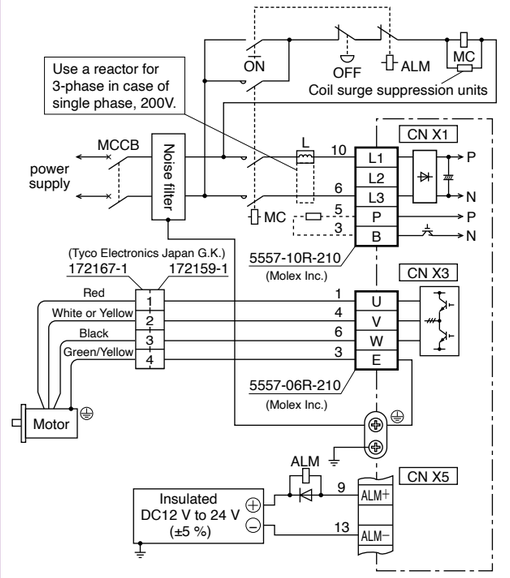

Encoder Wiring Diagram

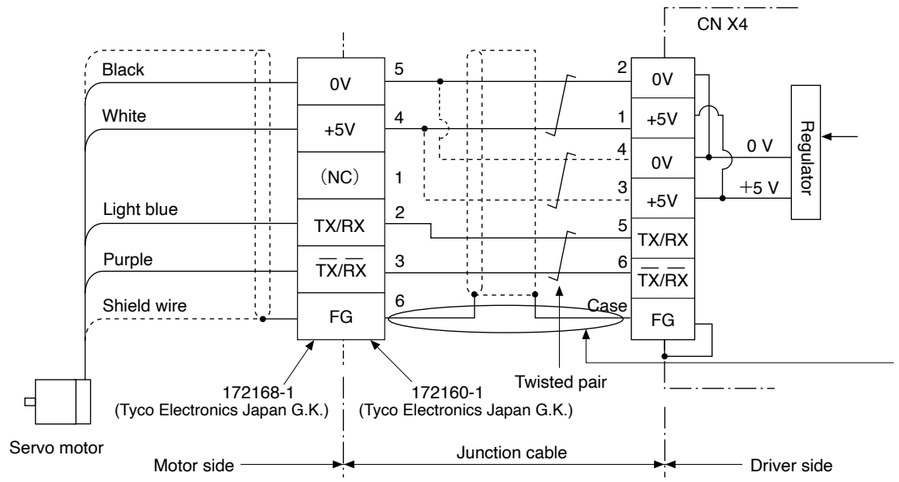

When you make your own junction cable for encoder (Refer to P.401, P.402 "Options" for connector.)

1) Refer the wiring diagram.
2) Use the twisted pair wire with shield, with core diameter of 0.18 mm2 (AWG24) or larger, with higher bending resistance.
3) Use the twisted pair wire for the corresponding signal and power supply.
4) Shielding
   Connect the shield of the driver to the case of CN X4.
   Connect the shield of the motor to Pin-6.

CN X 5 Wiring Example at Position Control Mode

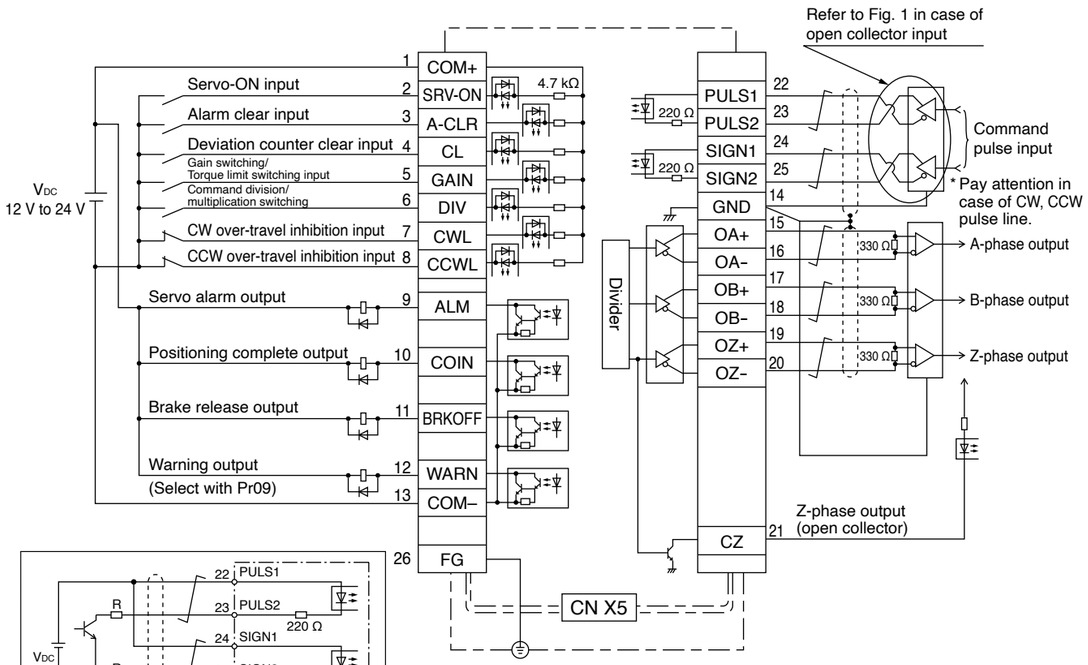

Fig. 1
This fig. shows the usage of an external control signal power supply.
You need to install an resistor R for current limit corresponding to VDC.

CN X 5 Wiring Example at Internal Velocity Control Mode

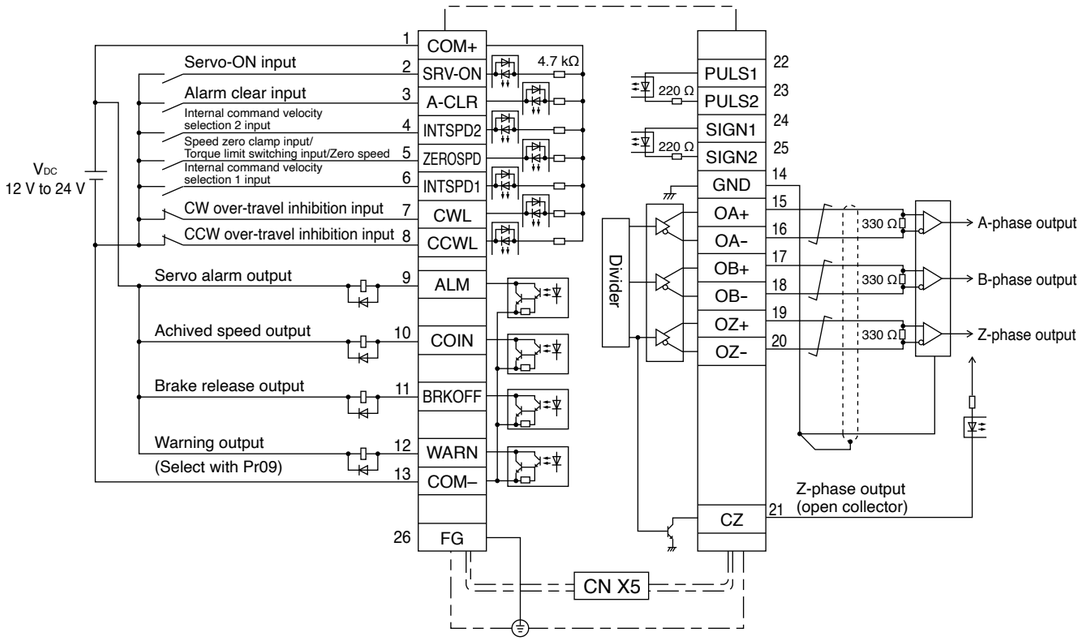

Frame K

[unit: mm]

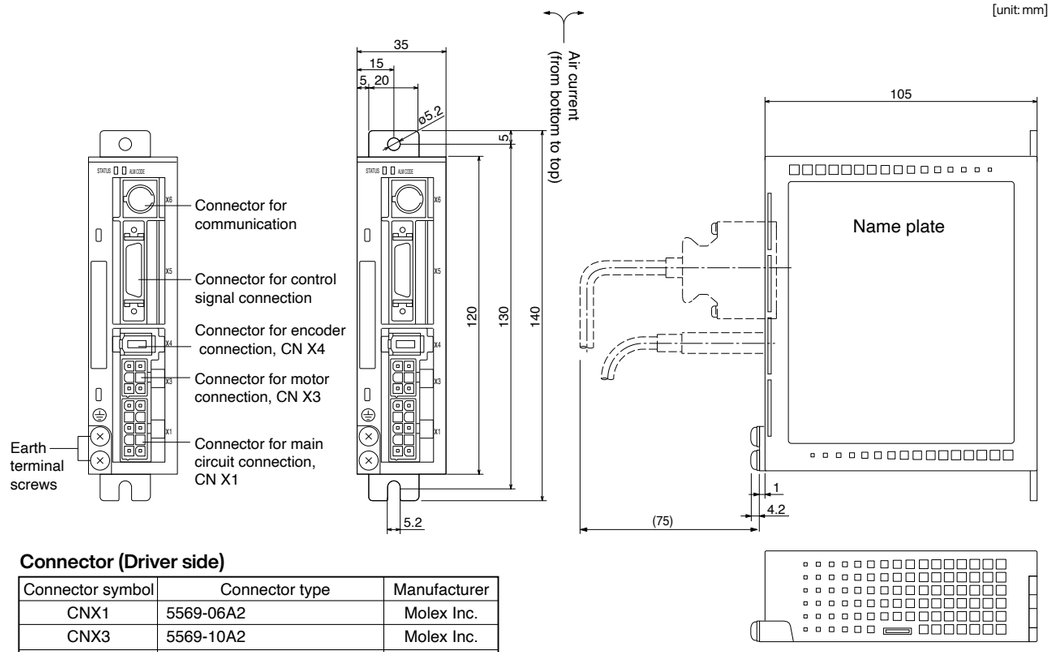

Connector (Driver side)

Connector symbol	Connector type	Manufacturer
CNX1	5569-06A2	Molex Inc.
CNX3	5569-10A2	Molex Inc.
CNX4	53460-0621	Molex Inc.
CNX5	10226-52A11L(or equivalent)	Sumitomo 3M

Mass: 0.35 kg

Frame L

[unit: mm]

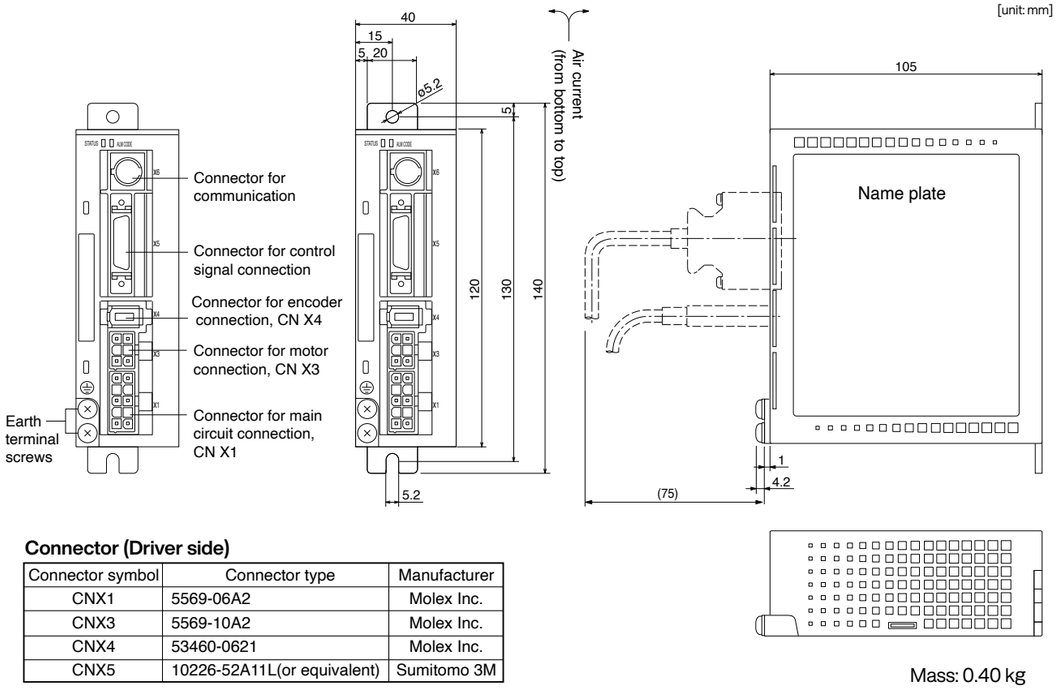

Connector (Driver side)

Connector symbol	Connector type	Manufacturer
CNX1	5569-06A2	Molex Inc.
CNX3	5569-10A2	Molex Inc.
CNX4	53460-0621	Molex Inc.
CNX5	10226-52A11L(or equivalent)	Sumitomo 3M

Mass: 0.40 kg

		AC100 V		
Motor model	MUMA	5AZP1□	011P1□	021P1□
Applicable driver	Model No.	MKDET1105P	MKDET1110P	MLDET2110P
	Frame symbol	Frame K		Frame L
Power supply capacity (kVA)		0.3	0.4	0.5
Rated output (W)		50	100	200
Rated torque (N·m)		0.16	0.32	0.64
Momentary Max. peak torque (N·m)		0.48	0.95	1.91
Rated current (Arms)		1.0	1.6	2.5
Max. current (Ao-p)		4.3	6.9	11.7
Regenerative brake frequency (times/min) Note)1	Without option	No limit Note)2		
	DV0P2890	No limit Note)2		
Rated rotational speed (r/min)		3000		
Max. rotational speed (r/min)		5000		
Moment of inertia of rotor ($\times10^{-4}$ kg·m^2)	Without brake	0.021	0.032	0.10
	With brake	0.026	0.036	0.13
Recommended moment of inertia ratio of the load and the rotor Note)3		30 times or less		
Rotary encoder specifications		2500 P/r Incremental		
	Resolution per single turn	10000		
Protective enclosure rating		IP65 (except rotating portion of output shaft and lead wire end)		
Environment	Ambient temperature	0 ˚C to 40 ˚C (free from freezing), Storage : –20 ˚C to 65 ˚C (Max.temperature guarantee 80 ˚C for 72 hours <nomal humidity>)		
	Ambient humidity	85 %RH or lower (free from condensing)		
	Installation location	Indoors (no direct sunlight), free from corrosive gas, inflammable gas, oil mist and dust		
	Altitude	1000 m or lower		
	Vibration resistance	49 m/s^2 or less		
Mass (kg), ( ) represents holding brake type		0.4 (0.6)	0.5 (0.7)	0.96 (1.36)

Brake specifications (This brake will be released when it is energized. Do not use this for braking the motor in motion.)		
Static friction torque (N·m)	0.29	1.27
Engaging time (ms)	25	50
Releasing time (ms) Note)4	20 (30)	15 (100)
Exciting current (DC) (A)	0.26	0.36
Releasing voltage	DC 1 V or more	
Exciting voltage	DV 24 V ±10 %	

Permissible load				
During assembly	Radial load P-direction (N)	147	392	
	Thrust load A-direction (N)	88	147	
	Thrust load B-direction (N)	117	196	
During operation	Radial load P-direction (N)	68	245	
	Thrust load A-direction (N)	58	98	
	Thrust load B-direction (N)	58	98	

For motor dimensions, refer to P.393, and for the driver, refer to P.388.

Model Designation

e.g.) M U M A 5 A Z P 1 S

Symbol	Series
MUMA	Ultra low inertia (50 W to 200 W)

Motor rated output

Symbol	Rated output
5A	50 W
01	100 W
02	200 W

Voltage specifications

Symbol	Specifications
1	100 V
Z	100/200 V (50 W only)

Design order
1: Standard

Motor structure

Symbol	Shaft	Holding brake		Oil seal	
	Key-way, center tap	without	with	without	with
S	●	●		●	
T	●		●	●	

Rotary encoder specifications

Symbol	Format	Pulse counts	Resolution	Wires
P	Incremental	2500 P/r	10000	5

Torque Characteristics [at AC100 V of power voltage (Dotted line represents the torque at 10 % less supply voltage.)]

MUMA5AZP1□

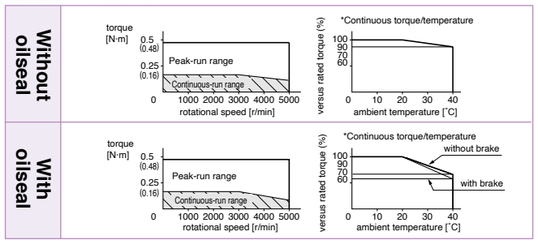

MUMA011P1□

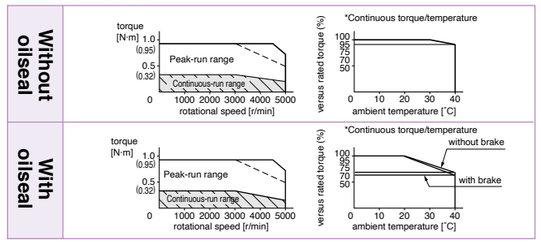

MUMA021P1□

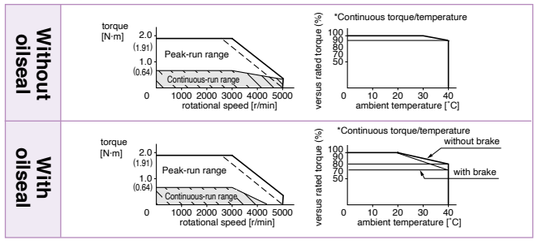

*When you lower the torque limit setup (Pr5E and 5F), running range at high speed might be lowered as well.

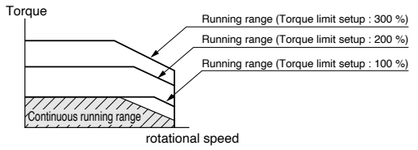

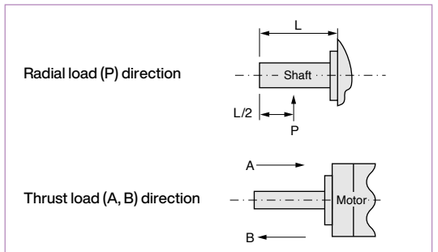

Note) 1. Regenerative brake frequency represents the frequency of the motor's stops from the rated speed with deceleration without load.
- If the load is connected, frequency will be defined as 1/(m+1), where m = (load moment of inertia) / (rotor moment of inertia).
- When the motor speed exceeds the rated speed, regenerative brake frequency is in inverse proportion to the square of (running speed/rated speed).
- Power supply voltage is AC115 V (at 100 V of the main voltage). If the supply voltage fluctuates, frequency is in inverse proportion to the square of (Running supply voltage/115) relative to the value in the table.
- When regeneration occurs continuosly such cases as running speed frequently changes or vertical feeding, consult us or a dealer.

2. If the effective torque is within the rated torque, there is no limit in regenerative brake.
3. Consult us or a dealer if the load moment of inertia exceeds the specified value.
4. Specified releasing time is obtained with the use of surge absorber for brake (Z15D151 by SEMITEC Corporation or equivalent). ( ) represents the actually measured value using a diode (200 V, 1 A or equivalent)

		AC200 V			
Motor model	MUMA	5AZP1□	012P1□	022P1□	042P1□
Applicable driver	Model No.	MKDET1505P		MKDET1310P	MLDET2310P
				MKDET2210P	MLDET2510P
	Frame symbol	Frame K		Frame K	Frame L
				Frame L	
Power supply capacity (kVA)		0.3	0.3	0.5	0.9
Rated output (W)		50	100	200	400
Rated torque (N · m)		0.16	0.32	0.64	1.3
Momentary Max. peak torque (N · m)		0.48	0.95	1.91	3.8
Rated current (Arms)		1.0	1.0	1.6	2.5
Max. current (Ao-p)		4.3	4.3	7.5	11.7
Regenerative brake frequency (times/min) Note)1	Without option	No limit Note)2			
	DV0P2891	No limit Note)2			
Rated rotational speed (r/min)		3000			
Max. rotational speed (r/min)		5000			
Moment of inertia of rotor ($\times 10^{-4}$ kg·m^2)	Without brake	0.021	0.032	0.10	0.17
	With brake	0.026	0.036	0.13	0.20
Recommended moment of inertia ratio of the load and the rotor Note)3		30 times or less			
Rotary encoder specifications		2500 P/r Incremental			
	Resolution per single turn	10000			
Protective enclosure rating		IP65 (except rotating portion of output shaft and lead wire end)			
Environment	Ambient temperature	0 ˚C to 40 ˚C (free from freezing), Storage : –20 ˚C to 65 ˚C (Max.temperature guarantee 80 ˚C for 72 hours <nomal humidity>)			
	Ambient humidity	85 %RH or lower (free from condensing)			
	Installation location	Indoors (no direct sunlight), free from corrosive gas, inflammable gas, oil mist and dust			
	Altitude	1000 m or lower			
	Vibration resistance	49 m/s^2 or less			
Mass (kg), ( ) represents holding brake type		0.4 (0.6)	0.5 (0.7)	0.96 (1.36)	1.5 (1.9)

Brake specifications (This brake will be released when it is energized. Do not use this for braking the motor in motion.)		
Static friction torque (N · m)	0.29	1.27
Engaging time (ms)	25	50
Releasing time (ms) Note)4	20 (30)	15 (100)
Exciting current (DC) (A)	0.26	0.36
Releasing voltage	DC 1 V or more	
Exciting voltage	DV 24 V ±10 %	

Permissible load			
During assembly	Radial load P-direction (N)	147	392
	Thrust load A-direction (N)	88	147
	Thrust load B-direction (N)	117	196
During operation	Radial load P-direction (N)	68	245
	Thrust load A-direction (N)	58	98
	Thrust load B-direction (N)	58	98

For motor dimensions, refer to P.393, and for the driver, refer to P.388.

Note) Driver for 50 W and 100 W has a common power supply of single phase and 3-phase 200 V.
Driver for 200 W, the upper row is the power supply of 3-phase 200 V, and lower is the power supply of single-phase 200 V.
Driver for 400 W, the upper row is the power supply of 3-phase 200 V, and lower is the common power supply of single-phase and 3-phase 200 V.

Model Designation

e.g.) M U M A 5 A Z P 1 S

Symbol	Series
MUMA	Ultra low inertia (50 W to 400 W)

Motor rated output

Symbol	Rated output
5A	50 W
01	100 W
02	200 W
04	400 W

Voltage specifications

Symbol	Specifications
2	200 V
Z	100/200 V (50 W only)

Design order
1: Standard

Motor structure

Symbol	Shaft	Holding brake		Oil seal	
	Key-way, center tap	without	with	without	with
S	●	●		●	
T	●		●	●	

Rotary encoder specifications

Symbol	Format	Pulse counts	Resolution	Wires
P	Incremental	2500 P/r	10000	5

Torque Characteristics [at AC200 V of power voltage (Dotted line represents the torque at 10 % less supply voltage.)]

MUMA5AZP1□

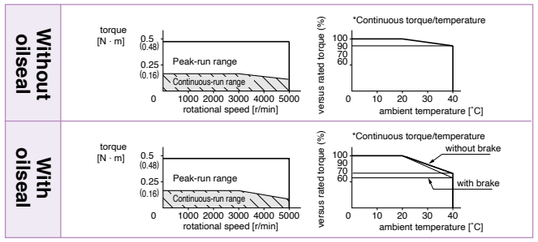

MUMA012P1□

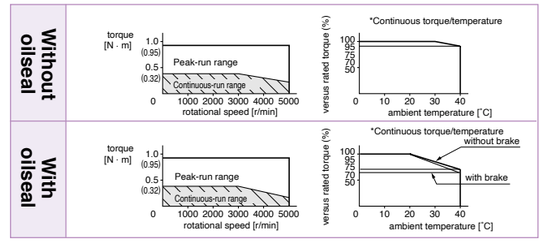

MUMA022P1□

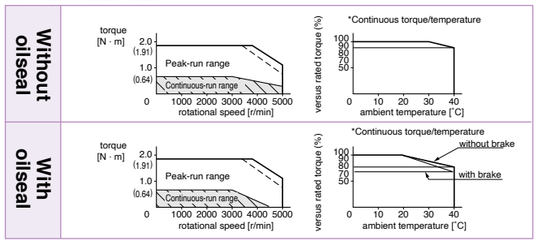

MUMA042P1□

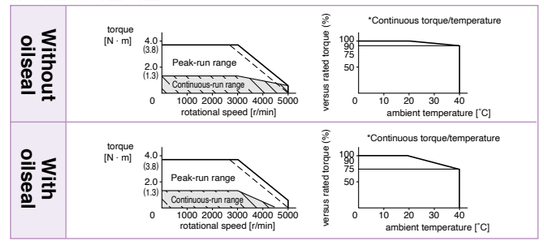

*When you lower the torque limit setup (Pr5E and 5F), running range at high speed might be lowered as well.

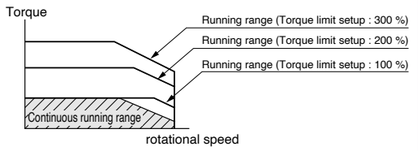

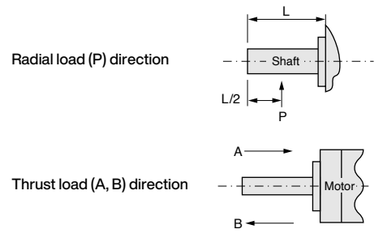

Note) 1. Regenerative brake frequency represents the frequency of the motor's stops from the rated speed with deceleration without load.
- If the load is connected, frequency will be defined as 1/(m+1), where m = (load moment of inertia) / (rotor moment of inertia).
- When the motor speed exceeds the rated speed, regenerative brake frequency is in inverse proportion to the square of (running speed/rated speed).
- Power supply voltage is AC240 V (at 200 V of the main voltage). If the supply voltage fluctuates, frequency is in inverse proportion to the square of (Running supply voltage/240) relative to the value in the table.
- When regeneration occurs continuously such cases as running speed frequently changes or vertical feeding, consult us or a dealer.

2. If the effective torque is within the rated torque, there is no limit in regenerative brake.
3. Consult us or a dealer if the load moment of inertia exceeds the specified value.
4. Specified releasing time is obtained with the use of surge absorber for brake (Z15D151 by SEMITEC Corporation or equivalent). ( ) represents the actually measured value using a diode (200 V, 1 A or equivalent)

[Unit: mm]

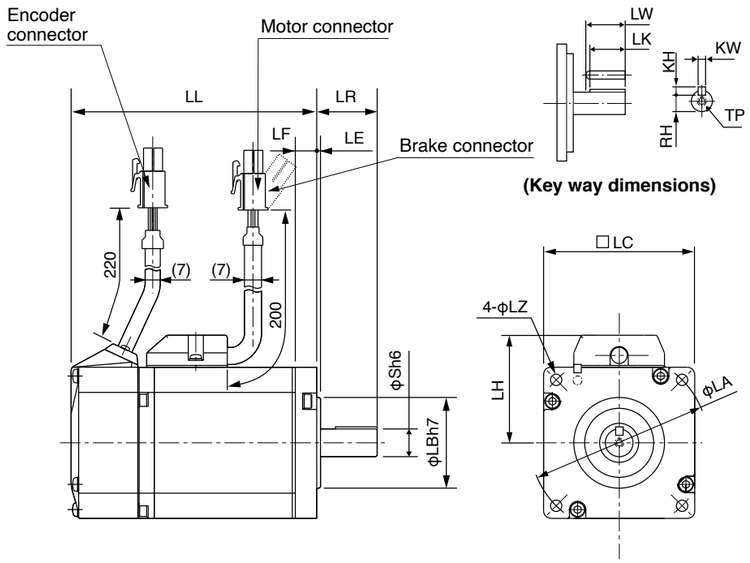

* Dimensions are subject to change without notice. Contact us or a dealer for the latest information

[Unit: mm]

		MUMA series (Ultra low inertia)			
Motor output		50 W	100 W	200 W	400 W
Motor model	MUMA	5A□P1□	01□P1□	02□P1□	04□P1□
Rotary encoder specifications		2500 P/r Incremental	2500 P/r Incremental	2500 P/r Incremental	2500 P/r Incremental
LL	Without brake	75.5	92.5	96	123.5
	With brake	107	124	129	156.5
LR		24	24	30	30
S		8	8	11	14
LA		48	48	70	70
LB		22	22	50	50
LC		42	42	60	60
LE		2	2	3	3
LF		7	7	7	7
LH		34	34	43	43
LZ		3.4	3.4	4.5	4.5
Key way	LW	14	14	20	25
	LK	12.5	12.5	18	22.5
	KW	3h9	3h9	4h9	5h9
	KH	3	3	4	5
	RH	6.2	6.2	8.5	11
	TP	M3 × 6 (depth)	M3 × 6 (depth)	M4 × 8 (depth)	M5 × 10 (depth)
Mass (kg)	Without brake	0.40	0.50	0.96	1.5
	With brake	0.60	0.70	1.36	1.9
Connector/Plug specifications		refer to Options, P.401, P.402.			

<Cautions>

Reduce the moment of inertia ratio if high speed response operation is required.

Read the Instruction Manual carefully and understand all precautions and remarks before using the products.

MINAS E Series Motors with Gear Reducer

Motor Types with Gear Reducer

Reduction ratio	Motor output (W)			Type of reducer
	100	200	400	
1/ 5	●	●	●	For high precision
1/ 9	●	●	●	
1/25	●	●	●	

Efficiency of the gear reducer shows the following inclination in relation to output torque and rotational speed.

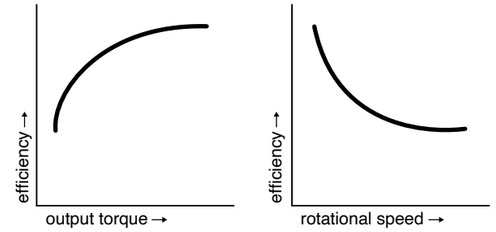

Model No. Designation

e.g.) M U M A 0 1 1 P 3 1 N

Symbol	Series
MUMA	Low inertia (100 to 400 W)

Motor rated output

Symbol	Rated output
01	100 W
02	200 W
04	400 W

Voltage specifications

Symbol	Specifications
1	100 V
2	200 V

Rotary encoder specifications

Symbol	Format	Pulse counts	Pulse counts	Wire
P	Incremental	2500 P/r	10000	5

Motor types with gear reducer

Symbol	Reduction ratio	Motor output 100	200	400	Type of reducer
1N	1/ 5	●	●	●	For High precision
2N	1/ 9	●	●	●	
4N	1/25	●	●	●	

Motor structure

Symbol	Shaft	Holding brake	
	Key-way	without	with
3	●	●	
4	●		●

Specifications of Motor with Gear Reducer

Motor series		MUMA
Gear reducer	Backlash	3 minutes or smaller (initial value) at output shaft of the reducer
	Composition of gear	Planetary gear
	Gear efficiency	65 % to 85 %
	Rotational direction at output shaft (of reducer)	Same direction as the motor output shaft
	Composition of gear	Planetary gear
	Mounting method	Flange mounting
	Permissible moment of inertia of the load (conversion to the motor shaft)	10 times or smaller than rotor moment of inertia of the motor
	Protective structure	IP44 (at gear reducer)
Environment	Ambient temperature	0 ˚C to 40 ˚C
	Ambient humidity	85 %RH (free from condensation) or less
	Vibration resistance	49 m/s² or less (at motor frame)
	Impact resistance	98 m/s² or less

Table of Motor with Gear Reducer Specifications

Model	Motor	MUMA with gear reducer											
	Output	Reduction ratio	Output	Rated speed	Max. speed	Rated torque	Peak max. torque	Moment of inertia (motor + reducer/converted to motor shaft)		Mass		Permissible radial load	Permissible thrust load
								w/o brake	w/ brake	w/o brake	w/ brake		
	(W)		(W)	(r/min)	(r/min)	(N·m)	(N·m)	J (× 10^{-4}kg·m²)		(kg)		(N)	(N)
MUMA01□P□1N	100	1/5	75	600	1000	1.18	3.72	0.072	0.076	1.05	1.25	490	245
MUMA01□P□2N		1/9	80	333	555	2.25	6.86	0.0663	0.0703	1.05	1.25	588	294
MUMA01□P□4N		1/25	80	120	200	6.27	19.0	0.0645	0.0685	2.20	2.40	1670	833
MUMA02□P□1N	200	1/5	170	600	1000	2.65	8.04	0.218	0.248	1.68	2.08	490	245
MUMA02□P□2N		1/9	132	333	555	3.72	11.3	0.368	0.398	2.66	3.06	1180	588
MUMA02□P□4N		1/25	140	120	200	11.1	33.3	0.388	0.418	2.66	3.06	1670	833
MUMA042P□1N	400	1/5	340	600	1000	5.39	16.2	0.533	0.563	3.2	3.6	980	490
MUMA042P□2N		1/9	332	333	555	9.51	28.5	0.438	0.468	3.2	3.6	1180	588
MUMA042P□4N		1/25	332	120	200	26.4	79.2	0.470	0.500	4.7	5.1	2060	1030

For dimensions, refer to P.397.

The Combination of the Driver and the Motor with Gear Reducer

Combination with driver		100 V		200 V		
Encoder	Motor output	Part No. of motor with gear reducer	Single phase, 100 V Part No. of driver	Part No. of motor with gear reducer	3-phase, 200 V Part No. of driver	Single phase, 200 V Part No. of driver
2500 P/r Incremental	100 W	MUMA011P□□N	MKDET1110P	MUMA012P□□N	MKDET1505P	MKDET1505P
	200 W	MUMA021P□□N	MLDET2110P	MUMA022P□□N	MKDET1310P	MLDET2210P
	400 W	–	–	MUMA042P□□N	MLDET2510P	MLDET2510P
					MLDET2310P	

For dimensions of driver, refer to P.388.

For High Precision (MUMA Series 100 W to 400 W)

Supply voltage to driver	Motor output \ Reduction ratio	1/5	1/9	1/25
100 V	100 W	MUMA011P□1N 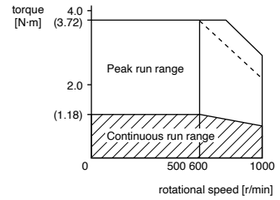	MUMA011P□2N 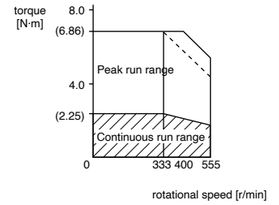	MUMA011P□4N 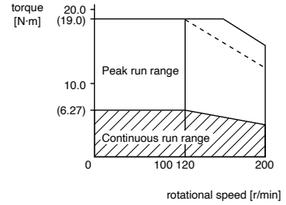
	200 W	MUMA021P□1N 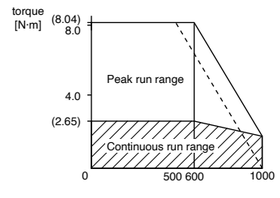	MUMA021P□2N 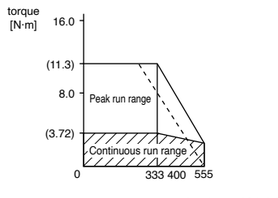	MUMA021P□4N 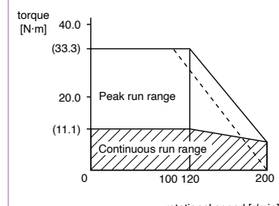
200 V	100 W	MUMA012P□1N 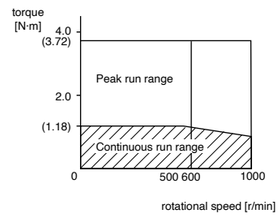	MUMA012P□2N 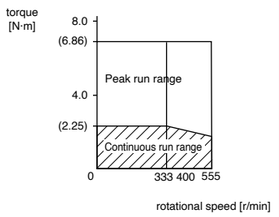	MUMA012P□4N 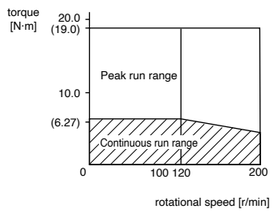
	200 W	MUMA022P□1N 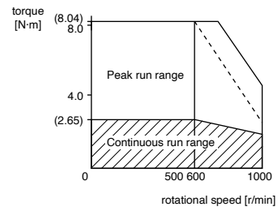	MUMA022P□2N 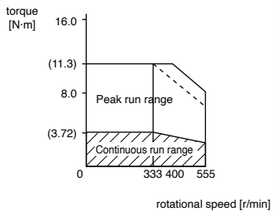	MUMA022P□4N 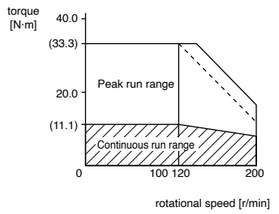
	400 W	MUMA042P□1N 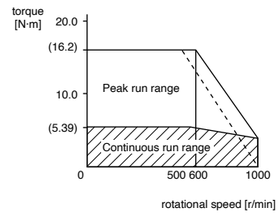	MUMA042P□2N 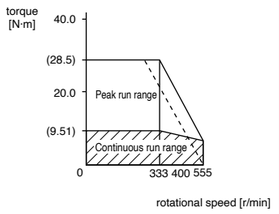	MUMA042P□4N 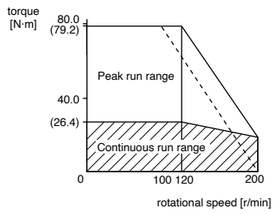

Dotted line represents the torque at 10 % less supply voltage.

MUMA series with Gear Reducer

[Unit: mm]

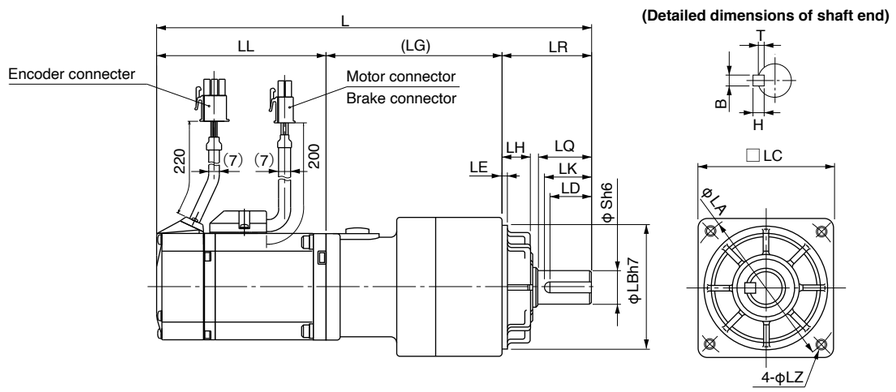

2500 P/r Encoder

[Unit: mm]

Model	Motor output	Reduction ratio	L	LL	LR	LQ	LC	LB	LA	S	LH	LZ	LK	(LG)	LE	Key way B×H×LD	T
MUMA01□P□1N	100 W	1 / 5	192	92.5	32	20	52	50	60	12	10	M5 (Depth: 12)	18	67.5	3	4×4×16	2.5
			223.5	124													
MUMA01□P□2N		1 / 9	192	92.5													
			223.5	124													
MUMA01□P□4N		1/25	234.5	92.5	50	30	78	70	90	19	17	M6 (Depth: 20)	26	92		6×6×22	3.5
			266	124													
MUMA02□P□1N	200 W	1 / 5	200.5	96	32	20	52	50	60	12	10	M5 (Depth: 12)	18	72.5		4×4×16	2.5
			233.5	129													
MUMA02□P□2N		1 / 9	235.5	96	50	30	78	70	90	19	17	M6 (Depth: 20)	26	89.5		6×6×22	3.5
			268.5	129													
MUMA02□P□4N		1/25	246	96										100			
			279	129													
MUMA042P□1N	400 W	1 / 5	263	123.5										89.5			
			296	156.5													
MUMA042P□2N		1 / 9	263	123.5													
			296	156.5													
MUMA042P□4N		1/25	288.5	123.5	61	40	98	90	115	24	18	M8 (Depth: 20)	35	104	5	8×7×30	4
			321.5	156.5													

Upper column : without brake
Lower column : with brake

Setup Support Software “PANATERM” for MINAS series AC Servo Motor & Driver

Part No.	DV0P4460 (Japanese/English version)

The PANATERM assists users in setting parameters, monitoring control conditions, setup support, and analyzing mechanical operation data on the PC screen, when installed in a commercially available personal computer, and connected to the MINAS A4 series, E series through the RS232 serial interface.

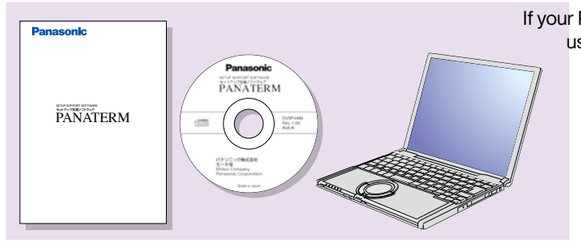

If your PC does not have RS232 port, use RS232-USB converter.



Basic Function

Parameter setup
- After a parameter is defined on the screen, it will be sent to the driver immediately.
- Once you register parameters you frequently use, they can be easily set up on the screen.

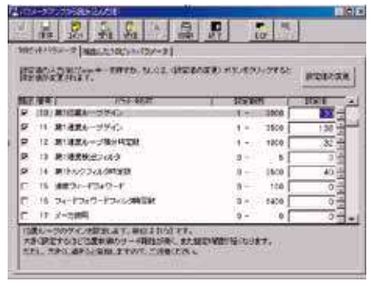

Parameter

Monitoring Control Conditions

Monitor
- Control conditions: Control mode, velocity, torque, error and warning
- Driver input signal
- Load conditions: Total count of command/feedback pulses, Load ratio, Regenerative resistor load ratio

Alarm
- Displays the numbers and contents of the current alarm and up to 14 error events in the past.
- Clears the numbers and contents of the current alarm and up to 14 error events in the past.

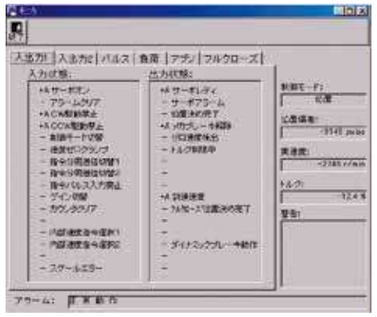

Monitor

Setup

Auto tuning
- Gain adjustment and inertia ratio measurement

Graphic waveform display
- The graphic display shows command velocity, actual velocity, torque, and error waveforms.

Absolute encoder setup
- Clears absolute encoder at the origin.
- Displays single revolution/multi-revolution data.
- Displays absolute encoder status.

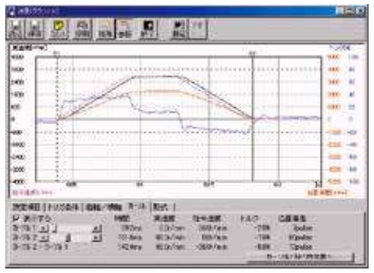

Graphic waveform display

Analysis of Mechanical Operation Data

Frequency analysis
- Measures frequency characteristics of the machine, and displays Bode diagram.

■ Can not use with A5, A6 Family.

Hardware configuration
[Personal computer] • CPU : Pentium 100MHz or more • Memory : 16 MB or more (32 MB recommended) • Hard disk capacity (vacancy of 25 MB or more recommended) • OS : Windows® 98, Windows® Me, Windows® 2000, Windows® XP (US version) • Communication speed of serial communication port : 2400 bps or more (The software may not operate normally using USB-to-Serial adapter.) **[Display]** • Resolution : 640*480 (VGA) or more (desirably 1024*768) • Number of colors : 256 colors or more
[CD-ROM drive] • CD-ROM drive operable on the above-mentioned personal computer

Encoder Cable For available optional items, please refer to P.400.

1	2	3	4	5	6	7	8	9	10	11	12
M	F	E	C	A	0	0	5	0	E	A	M

Cable end (Driver side)

M	Connector (MUMA)

Cable end (Encoder side)

A	Tyco Electronics Japan G.K. connector

Cable type

E	PVC cable with shield by Oki Electric Cable Co., 0.20 mm² × 3P

Cable length

0030	3 m
0050	5 m
0100	10 m
0200	20 m

Type classification

MFECA: Encoder cable

Motor Cable, Brake Cable For available optional items, please refer to P.400.

1	2	3	4	5	6	7	8	9	10	11	12
M	F	M	C	A	0	0	5	0	A	E	B

Cable end at driver side

B	Molex Inc.
T	Clamp terminal

Cable end at motor side

E	Tyco Electronics Japan G.K. connector

Cable type

A	ROBO-TOP® 4-wire (DYDEN CORPORATION)
G	ROBO-TOP® 2-wire (DYDEN CORPORATION)

Cross section of cable core

0	0.75 mm²
1	1.25 mm²
2	2.0 mm²
3	3.5 mm²

Type classification

A	Standard
B	Special
⋮	Design Oder

Cable length

003	3 m
005	5 m
010	10 m
020	20 m

AC servo motor cable

ROBO-TOP® is a trade mark of DYDEN CORPORATION

Cable Set (3 m)

Part No.	DV0P37300

1) Interface cable : DV0P0800
2) Encoder cable (3 m) : MFECA0030EAM
3) Motor cable (3 m) : MFMCA0030AEB
4) Connector kit for driver power supply connection : DV0P2870

Cable Set (5 m)

Part No.	DV0P39200

1) Interface cable : DV0P0800
2) Encoder cable (5 m) : MFECA0050EAM
3) Motor cable (5 m) : MFMCA0050AEB
4) Connector kit for driver power supply connection : DV0P2870

Encoder Cable

Part No.	MFECA0 ＊ ＊ 0EAM

[Unit: mm]

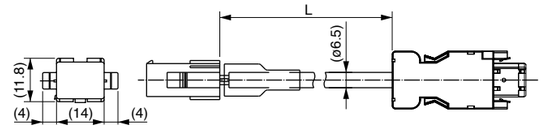

Title	Part No.	Manufacturer
Connector (Driver side)	3E206-0100KV	Sumitomo 3M or equivalent
Shell kit	3E306-3200-008	
Connector	172160-1	Tyco Electronics
Connector Pin	170365-1	
Cable	0.20 mm² × 3P	Oki Electric Cable Co., Ltd.

L (m)	Part No.
3	MFECA0030EAM
5	MFECA0050EAM
10	MFECA0100EAM
20	MFECA0200EAM

Motor Cable (ROBO-TOP® 105 °C 600 V . DP)

ROBO-TOP® is a trade mark of DYDEN CORPORATION

Part No.	MFMCA0 ＊ ＊ 0AEB

[Unit: mm]

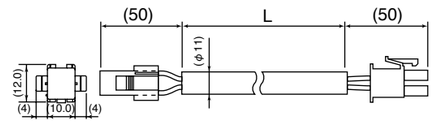

Title	Part No.	Manufacturer
Connector	172159-1	Tyco Electronics
Connector Pin	170362-1, 170366-1	
Connector	5557-06R-210	Molex Inc
Connector Pin	5556T	
Cable	ROBO-TOP 600 V 0.75 mm²	Daiden Co.,Ltd.

L (m)	Part No.
3	MFMCA0030AEB
5	MFMCA0050AEB
10	MFMCA0100AEB
20	MFMCA0200AEB

Brake Cable (ROBO-TOP® 105 °C 600V . DP)

ROBO-TOP® is a trade mark of DYDEN CORPORATION

Part No.	MFMCB0 ＊ ＊ 0GET

[Unit: mm]

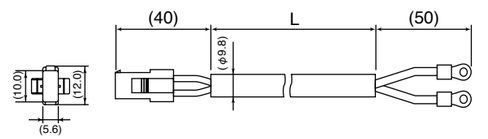

Title	Part No.	Manufacturer
Connector	172157-1	Tyco Electronics
Connector Pin	170362-1, 170366-1	
Nylon insulated round terminal	N1.25-M4	J.S.T Mfg. Co., Ltd.
Cable	ROBO-TOP 600 V 0.75 mm²	Daiden Co.,Ltd.

L (m)	Part No.
3	MFMCB0030GET
5	MFMCB0050GET
10	MFMCB0100GET
20	MFMCB0200GET

Connector Kit for Power Supply Connection

Part No. DV0P2870

● Parts composition

Title	Part No.	Number	Manufacturer	Note
Connector (10 pins)	5557-10R-210	1	Molex Inc.	For connector, CN X1 (10 pins)
Connector pin	5556PBTL	6		

● Pin configuration of connector CN X1

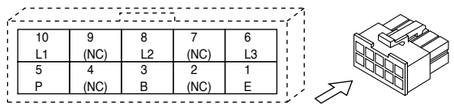

● Recommended manual crimping tool (to be prepared by customer)

Part No.	Cable material
57026-5000	UL1007
57027-5000	UL1015

<Cautions>

1. The above pin disposition is shown when viewed from the terminal inserting direction. Make a correct wiring by checking the stamped pin numbers on the connector itself.
2. Refer to P.386 for wiring and connection.
3. Do not connect anything to pins marked "NC".

Connector Kit for Motor/Encoder Connection

Part No. DV0P3670 (Incremental 2500 pulse, 5-wire)

This option is required when you make your own encoder cable and motor cable. (Brake cable is required for brake.)

● Parts composition

Title	Part No.	Number	Manufacturer	Note
Connector (Driver side)	3E206-0100 KV	1	Sumitomo 3M or equivalent	For connector, CN X4 (6 pins)
Shell kit	3E306-3200-008	1		
Connector (6 pins)	172160-1	1	Tyco Electronics	For junction to encoder cable (6 pins)
Connector pin	170365-1	6		
Connector (4 pins)	172159-1	1	Tyco Electronics	For junction to motor power cable (4 pins)
Connector pin	170366-1	4		
Connector (6 pins)	5557-06R-210	1	Molex Inc.	For connector, CN X3 (6 pins)
Connector pin	5556PBTL	4		

<Remarks>

We may use parts equivalent to the above for shell and connector cover.

● Pin configuration of connector CN X4 plug

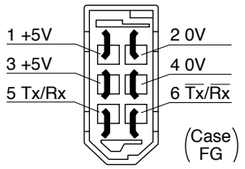

● Recommended manual crimping tool (to be prepared by customer)

Title	Part No.	Manufacturer	Cable material
For encoder cable junction	755330-1	Tyco Electronics	—
For motor power cable junction	755331-1		
For Connector CN X3	57026-5000	Molex Inc.	UL1007
	57027-5000		UL1015

<Remarks>

1. The above pin configuration is shown when viewed from the pin-soldering direction. Make a correct wiring by checking the stamped pin numbers on the connector itself.
2. Connect the shield of the wire to the case (FG) without fail.
3. For wiring and connection, refer to P.386.

● Pin configuration of encoder cable junction

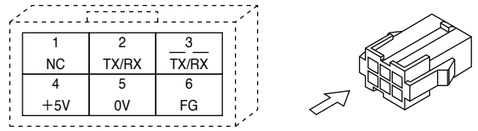

● Pin configuration of motor power cable junction

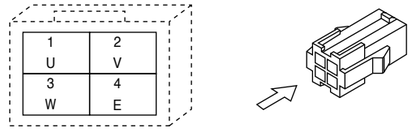

● Pin configuration of mating connector to CN X3 connector

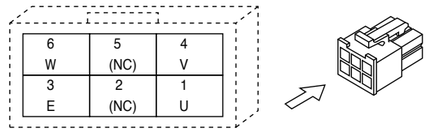

<Cautions>

1. The above pin configuration is shown when viewed from the terminal inserting direction. Make a correct wiring by checking the stamped pin numbers on the connector itself.
2. Refer to P.386 for wiring and connection.

Connector Kit for Interface

Part No. DV0P0770

● Parts composition

Title	Part No.	Number	Manufacturer	Note
Connector	10126-3000PE	1	Sumitomo 3M or equivalent	For connector, CN X5 (26 pins)
Connector cover	10326-52A0-008	1		

● Pin configuration of connector CN X5 (26 pins) (viewed from the soldering side)

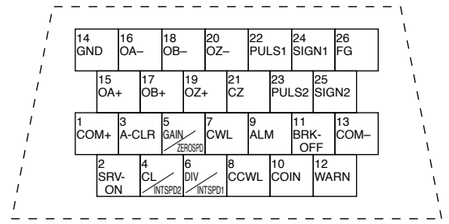

<Cautions>

1. Make a correct wiring by checking the stamped pin numbers on the connector itself.
2. Refer to P.387 for symbols and functions of the above signals.

Interface Cable

Part No.	DV0P0800	Cable of 2 m is connected.

● Dimensions

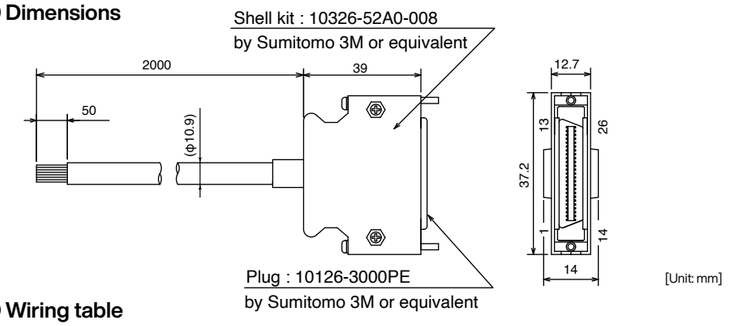

[Unit: mm]

● Wiring table

Pin No.	Title of signal	Color or cable	Pin No.	Title of signal	Color or cable	Pin No.	Title of signal	Color or cable
1	COM+	Orange (Red 1)	10	COIN	Pink (Black 1)	19	OZ+	Pink (Red 2)
2	SRV-ON	Orange (Black 1)	11	BRK-OFF	Orange (Red 2)	20	OZ-	Pink (Black 2)
3	A-CLR	Gray (Red 1)	12	WARN	Orange (Black 2)	21	CZ	Orange (Red 3)
4	CL/INTSPD2	Gray (Black 1)	13	COM-	Gray (Red 2)	22	PULS1	Gray (Red 3)
5	GAIN/ZEROSPD	White (Red 1)	14	GND	Gray (Black 2)	23	PULS2	Gray (Black 3)
6	DIV/INTSPD1	White (Black 1)	15	OA+	White (Red 2)	24	SIGN1	White (Red 3)
7	CWL	Yellow (Red 1)	16	OA-	White (Black 2)	25	SIGN2	White (Black 3)
8	CCWL	Yellow (Black 1)	17	OB+	Yellow (Red 2)	26	FG	Orange (Black 3)
9	ALM	Pink (Red 1)	18	OB-	Yellow (Black 2)			

<Notes>
e. g. of Pin No. designation :
Pin No. 1 ... Wire color is orange, and one red dot.
Pin No. 12 ... Wire color is orange, and two black dot.

<Caution>
Cable pin No. 26 is not connected to the connector shell (housing) or shielded wire (net wire).
Pin No. 26 of the Driver is connected to the shell (housing) of the connector.
The shielded wire (net wire) of the cable is connected to the shell (housing) of the connector of the cable, and by connecting the connector of the optional cable to the Driver, pin No. 26 of the cable and the shielded wire (net wire) of the cable gets connected via the Driver.

Communication Cable (For Connection with PC)

Part No.	DV0P1960

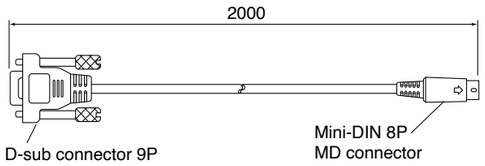

[Unit: mm]

Console

Part No.	DV0P4420

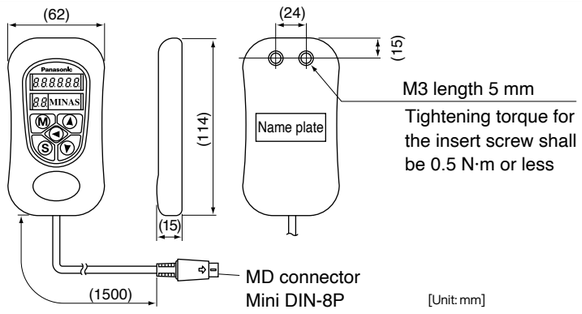

[Unit: mm]

DIN Rail Mounting Unit

Part No.	DV0P3811

● Dimensions

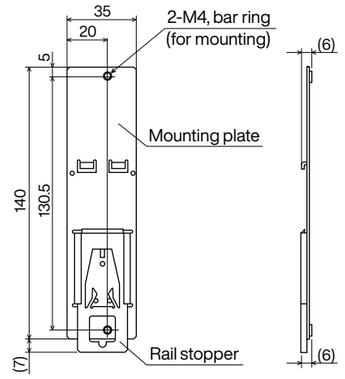

[Unit: mm]

<Notes>
2 mounting screws (M4 X L8, Pan head) are attached.
Rail stopper can be extended to max. 10 mm.

<Cautions>
Please read carefully operation manual before using this product.
In addition, please do not apply excessive stress to the product.

▪ Driver mounted to DIN rail

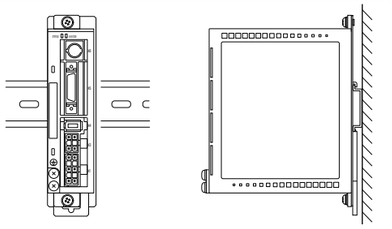

▪ How to Install

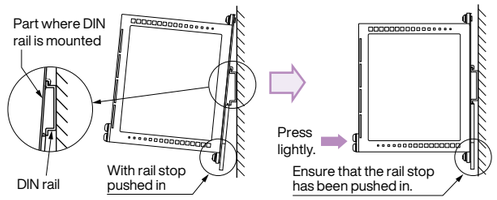

Hook the upper side of DIN rail mounting part on the DIN rail.

Press lightly the lower part of the main body of driver.

▪ Removing from DIN Rail

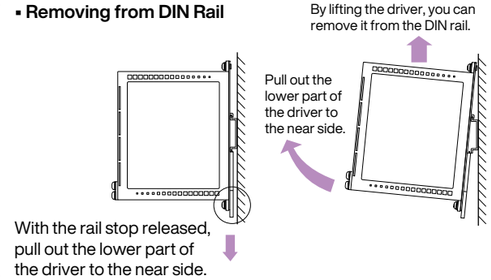

With the rail stop released, pull out the lower part of the driver to the near side.

External Regenerative Resistor

Part No.	Manufacturer's Part No.	Specifications			Note (Input Power of drive)
		Resistance	Rated power	Activation temperature of built-in fuse	
		Ω	W	°C	
DV0P2890	45M03	50	10	137 $^{+3}_{-2}$	Single phase, 100 V
DV0P2891	45M03	100	10	137 $^{+3}_{-2}$	Single/3-phase, 200 V

Manufactured by Iwaki Musen Kenkyuusho Co., Ltd.

● Dimensions

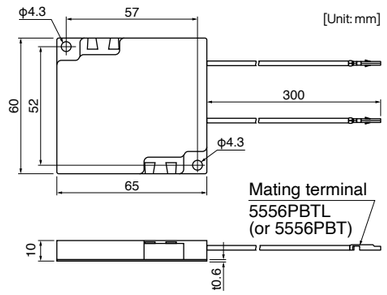

<Caution of when using external regeneration resistor>

Since it becomes high temperature, external regeneration resistor must be installed according to the contents shown below.

- **Attach to incombustibles, such as metal.**
- **Install in the place which cannot touch directly by covering with incombustibles etc.**
- **Do not install near the combustibles.**

Although the thermal cutoff is built in external regeneration resistor, the skin temperature of regeneration resistor may become high exceeding the operating temperature of thermal cutoff by the time the thermal cutoff operates in driver failure.
The thermal cutoff is for preventing ignition of the regeneration resistor in driver failure, and is not for controlling the skin temperature of resistor.

<Remarks>
Thermal fuse is installed for safety.
The thermal fuse may blow due to heat dissipating condition, working temperature, supply voltage or load fluctuation.
Make it sure that the surface temperature of the resistor may not exceed 100 **°C** at the worst running conditions with the machine, which brings large regeneration (such case as high supply voltage, load inertia is large or deceleration time is short) Please carry out air cooling if needed.

Reactor

Frame symbol of driver	Power supply specifications	Rated output	Part No.	Fig.
MKDE	Single phase, 100 V	50 W to 100 W	DV0P227	1
	Single phase, 200 V	50 W to 100 W	DV0P220	2
	3-phase, 200 V	50 W to 200 W		
MLDE	Single phase, 100 V	200 W	DV0P228	1
	Single phase, 200 V	200 W to 400 W	DV0P220	2
	3-phase, 200 V	400 W		

Fig.1

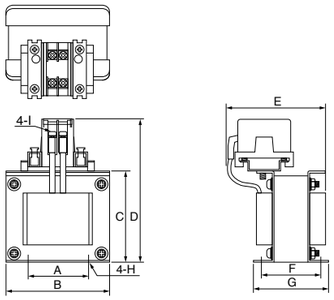

Fig.2

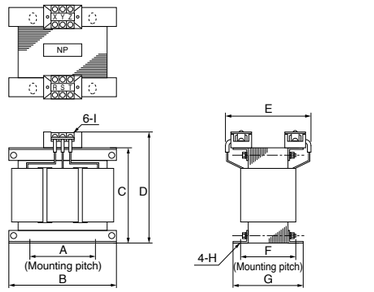

▪ Wiring of the reactor <Single phase>

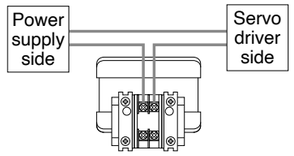

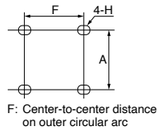

F: Center-to-center distance on outer circular arc

▪ Wiring of the reactor <3-Phase>

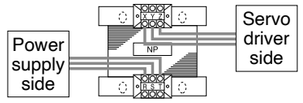

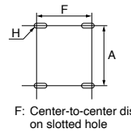

F: Center-to-center distance on slotted hole

[Unit: mm]

	Part No.	A	B	C	D	E (Max)	F	G	H	I	Inductance (mH)	Rated current (A)
Fig.1	**DV0P227**	55±0.7	76.5±1	66.5±1	110 Max	90	43.6±2	56±2	4-5φ×10	M4	4.02	5
	DV0P228	55±0.7	76.5±1	66.5±1	110 Max	95	48.0±2	61±2	4-5φ×10	M4	2	8
Fig.2	**DV0P220**	65±1	125±1	(93)	136 Max	155	70+3/–0	85±2	4-7φ×12	M4	6.81	3

Harmonic restraint

Harmonic restraint measures are not common to all countries. Therefore, prepare the measures that meet the requirements of the destination country.
When installing a product for Japan, refer to the instruction manual available on our website.

【Panasonic Industry Co., Ltd. web site】
industrial.panasonic.com/ac/e/

<Remarks>
When using a reactor, be sure to install one reactor to one servo driver.

■ Recommended devices

Surge Absorber for Motor Brake

Motor	Surge absorber for motor brake	
	Part No. (Manufacturer's)	Manufacturer
MUMA 50 W to 400 W	Z15D151	SEMITEC Corporation

List of Peripheral Devices

Manufacturer	Tel No. / Home Page	Peripheral devices
Iwaki Musen Kenkyusho Co., Ltd.	+81-44-833-4311 http://www.iwakimusen.co.jp/	Regenerative resistor
SEMITEC Corporation	+81-3-3621-2703 http://www.semitec.co.jp/english2/	Surge absorber for motor brake
TDK Corporation	+81-3-5201-7229 http://www.global.tdk.com/	Ferrite core
Okaya Electric Industries Co. Ltd.	+81-3-4544-7040 http://www.okayaelec.co.jp/english/index.html	Surge absorber Noise filter
Sumitomo 3M	+81-3-5716-7290 http:/solutions.3m.com/wps/portal/3M/ja_JP/WW2/Country/	Connector
Tyco Electronics Japan G.K.	+81-44-844-8052 http://www.te.com/ja/home.html	
Japan Molex Inc.	+81-462-65-2313 http://www.molex.co.jp	
DYDEN CORPORATION	+81-3-5805-5880 http://www.dyden.co.jp/english/index.htm	Cable

* The above list is for reference only. We may change the manufacturer without notice.

MEMO

Information

Contents

A6 Family 409
EU Directives/ UK Regulation/ Conformity to UL Standards/ KC 409
Composition of Peripheral Devices 411
E Series 415
Compliance to EU/ UK Regulation and EMC Directives 415
Composition of Peripheral Components 416
Motor Capacity Selection Software 417
AC Servo Motor Capacity Selection Software 417
Option Selection Software for AC Servo Motor 417
Guide to the International System of Units (SI) 418
Selecting Motor Capacity 420
Request Sheet for Motor Selection 426
Connection Between Driver and Controller 434
Connection Between A6 Family Driver and Controller 434
Replacing Old Model Servo Driver with MINAS A6 series 439
Connection Between E Series Driver and Controller 443
Index 448
Sales Office of Overseas 462

EU Directives/ UK Regulation

The EU Directives/ UK Regulation apply to all such electronic products as those having specific functions and have been exported to EU and directly sold to general consumers. Those products are required to conform to the EU unified standards and to furnish the CE marking on the products.
However, our AC servos meet the relevant EU Directives for EU Low Voltage Directives/UK Low Voltage Regulation Equipment so that the machine or equipment comprising our AC servos can meet EU Directives.

EU EMC Directives/UK EMC Regulation

MINAS Servo System conforms to relevant standard under EU EMC Directives/UK EMC Regulation setting up certain model (condition) with certain locating distance and wiring of the servo motor and the driver. And actual working condition often differs from this model condition especially in wiring and grounding. Therefore, in order for the machine to conform to the EU EMC Directives/UK EMC Regulation, especially for noise emission and noise terminal voltage, it is necessary to examine the machine incorporating our servos.

Conformity to UL Standards

Observe the following conditions of (1) and (2) to make the system conform to UL508C (E164620).

(1) Use the driver in an environment of Pollution Degree 2 or 1 prescribed in IEC60664-1.
(e.g. Install in the control box with IP54 enclosure.)

(2) Make sure to install a circuit breaker or fuse which are UL recognized (Listed Ⓤ marked) between the power supply and the noise filter.
For rated current of circuit breaker and fuse, refer to P.27 “Driver and List of Applicable Peripheral Devices”.
Use a copper cable with temperature rating of 75 ˚C or higher.

(3) Over-load protection level
Over-load protective function will be activated when the effective current exceeds 115 % or more than the rated current based on the time characteristics (see the graph). Confirm that the effective current of the driver does not exceed the rated current.
Set up the peak permissible current with Pr0.13 (Setup of 1st torque limit) and Pr5.22 (Setup 2nd torque limit).

■ Overload protection time characteristics

▪ **Motor type: 80 mm sq. or less MSMF**

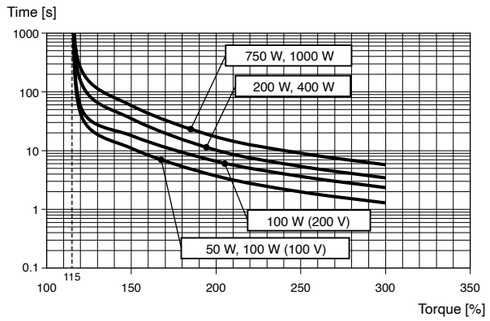

▪ **Motor type: 80 mm sq. or less MHMF**

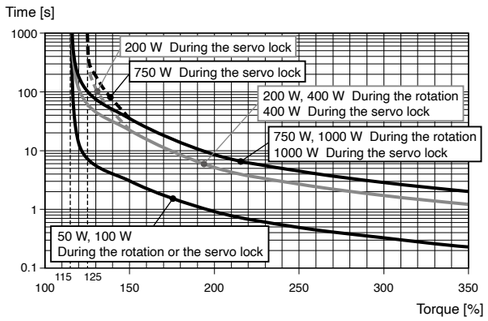

▪ **Motor type: 80 mm sq. or less MQMF**

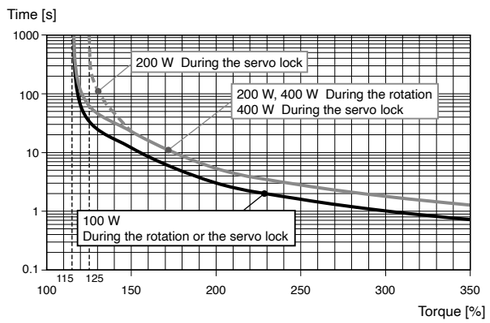

▪ **Motor type: 100 mm sq. or more MSMF**

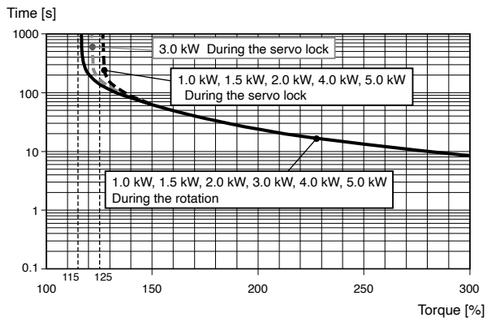

▪ **Motor type: 100 mm sq. or more MHMF**

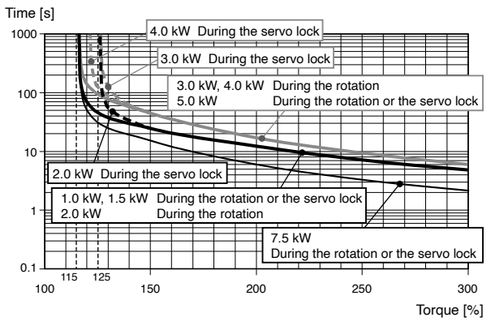

▪ **Motor type: 100 mm sq. or more MDMF**

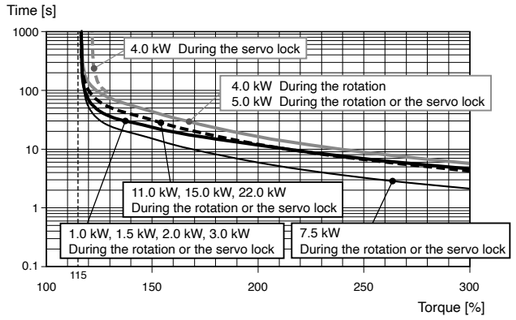

▪ **Motor type: 100 mm sq. or more MGMF**

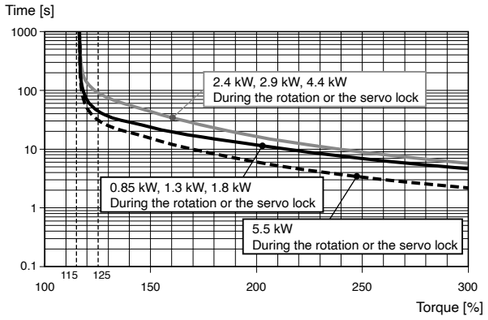

Conformed Standards

		Driver	Motor
EU/UK Standards	**EU EMC Directives/ UK EMC Regulation**	EN55011 EN61000-6-2 EN61000-6-4 EN61800-3	—
	EU Low Voltage Directives/ UK Low Voltage Regulation	EN61800-5-1	EN60034-1 EN60034-5
	Machinery (Functional safety *1)	ISO13849-1(PL e, Cat.3) EN61508(SIL3) EN62061(SILCL 3) EN61800-5-2(SIL3, STO)	—
UL Standards		UL61800-5-1 (E164620)	UL1004-1, UL1004-6 (E327868)
CSA Standards		C22.2 No.14	C22.2 No.100
Radio Waves Act (South Korea) (KC) *2		KN11 KN61000-4-2,3,4,5,6,8,11	—

IEC : International Electrotechnical Commission
EN : Europaischen Normen
EMC : Electromagnetic Compatibility
UL : Underwriters Laboratories
CSA : Canadian Standards Association

Pursuant to the directive 2004/108/EC, article 9(2)

● When export this product, follow statutory provisions of the destination country.

*1 A6SE, A6SG, A6NE, A6BE series doesn't correspond to the functional safety standard.

*2 Information related to the Korea Radio Law
This servo driver is a Class A commercial broadcasting radio wave generator not designed for home use. The user and dealer should be aware of this fact.

A 급 기기 (업무용 방송통신기자재)
이 기기는 업무용(A 급) 전자파적합기기로서 판매자 또는 사용자는 이 점을 주의하시기 바라며, 가정외의 지역에서 사용하는 것을 목적으로 합니다.

(대상기종 : Servo Driver **)**

Installation Environment

Use the servo driver in the environment of Pollution Degree 1 or 2 prescribed in IEC-60664-1 (e.g. Install the driver in control panel with IP54 protection structure.)

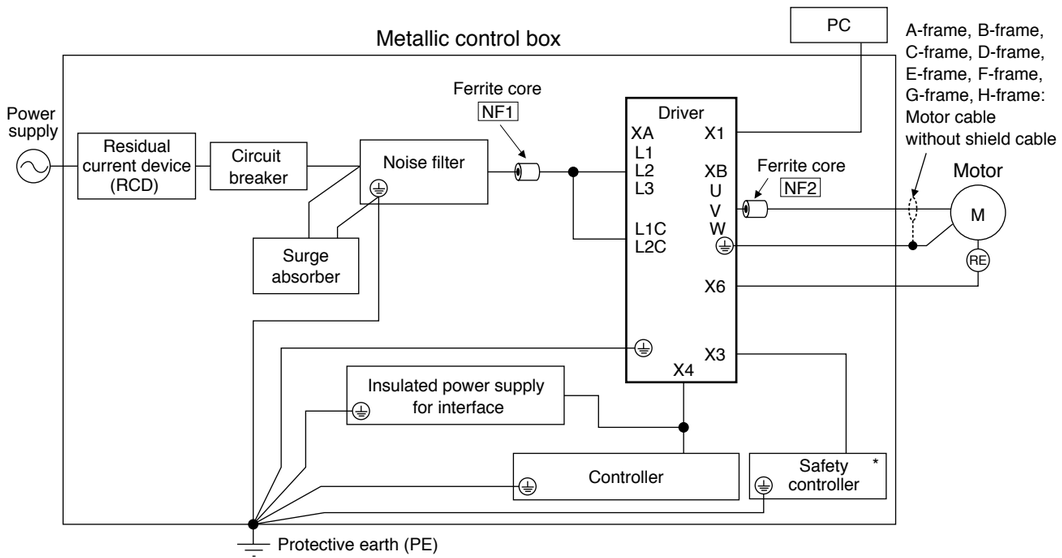

For NF1 to NF2, refer to the Table "Ferrite core" (P.414).

* A6SE, A6SG, A6NE, A6BE is not provided with X3 terminal.

<Caution>

Use options correctly after reading Operating Instructions of the options to better understand the precautions.

Take care not to apply excessive stress to each optional part.

Power Supply

100 V type (A-frame to C-frame)	Single phase, 100 V	+10 % –15 %	to	120 V	+10 % –15 %	50 Hz/60 Hz
200 V type (A-frame to D-frame)	Single/3-phase, 200 V	+10 % –15 %	to	240 V	+10 % –15 %	50 Hz/60 Hz
200 V type (E-frame to H-frame)	3-phase, 200 V	+10 % –15 %	to	240 V	+10 % –15 %	50 Hz/60 Hz

(1) This product is designed to be used in over-voltage category (installation category) III of EN 61800-5-1:2007.

(2) Use an insulated power supply of DC12 V to 24 V which has CE marking or complies with EN60950.

Circuit Breaker

Install a circuit breaker which complies with IEC Standards and UL recognized (Listed and marked) between power supply and noise filter.

The short-circuit protection circuit on the product is not for protection of branch circuit.

The branch circuit should be protected in accordance with NEC and the applicable local regulations in your area.

Noise Filter

When you install one noise filter at the power supply for multi-axes application, contact the manufacturer of the noise filter. If noise margin is required, connect 2 filters in series to emphasize effectiveness.

▪ Options

Option part No.	Voltage specifications for driver	Manufacturer's part No.	Applicable driver (frame)	Manufacturer
DV0P4170	Single phase 100 V, 200 V	SUP-EK5-ER-6	A-frame and B-frame	Okaya Electric Ind.

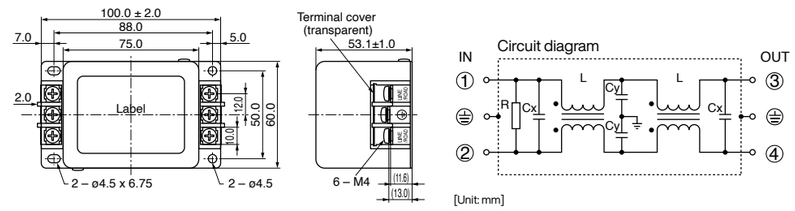

Option part No.	Voltage specifications for driver	Manufacturer's part No.	Applicable driver (frame)	Manufacturer
DV0PM20042	3-phase 200 V	3SUP-HU10-ER-6	A-frame and B-frame	Okaya Electric Ind.
	Single phase 100 V, 200 V 3-phase 200 V		C-frame	
DV0P4220	Single/3-phase 200 V	3SUP-HU30-ER-6	D-frame	
DV0PM20043	3-phase 200 V	3SUP-HU50-ER-6	E-frame	

[DV0PM20042, DV0P4220]

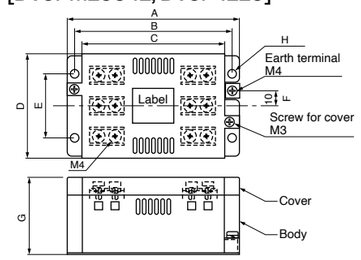

[DV0PM20043]

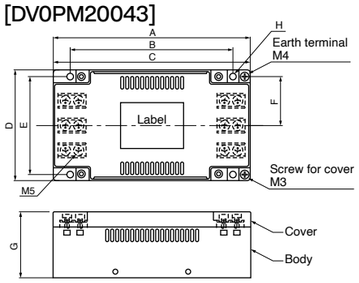

Circuit diagram

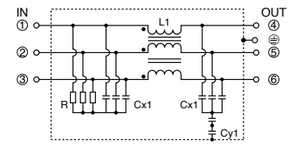

[Size] [Unit: mm]

	A	B	C	D	E	F	G	H
DV0PM20042	115	105	95	70	43	10	52	5.5
DV0P4220	145	135	125	70	50	10	52	5.5
DV0PM20043	165	136	165	90	80	40	54	5.5

For single phase application, use 2 terminals among 3 terminals, leaving the remaining terminal unconnected.

Option part No.	Voltage specifications for driver	Manufacturer's part No.	Applicable driver (frame)	Manufacturer
DV0P3410	3-phase 200 V	3SUP-HL50-ER-6B	F-frame	Okaya Electric Ind.

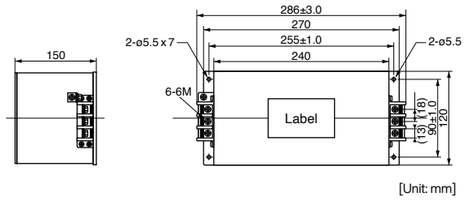

Circuit diagram

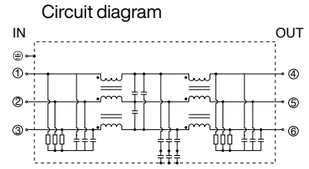

<Remarks>

- Select a noise filter of capacity that exceeds the capacity of the power source (also check for load condition).
- For detailed specification of the filter, contact the manufacturer.

Noise Filter

▪ Recommended components

Part No.	Voltage specifications for driver	Rated current (A)	Applicable driver (frame)	Manufacturer
HF3080C-SZA	3-phase 200 V	80	G	SOSHIN ELECTRIC CO.,LTD.
HF3100C-SZA		100	H	

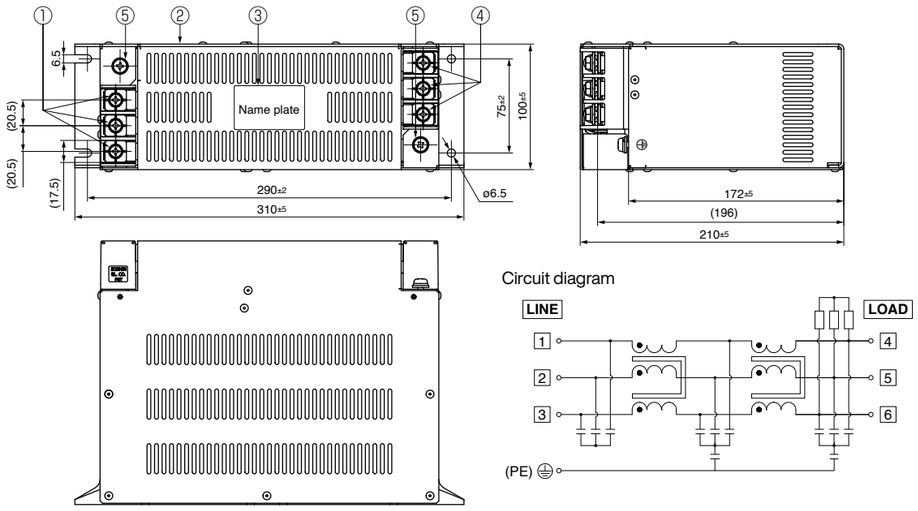

<Remarks>

- Select a noise filter of capacity that exceeds the capacity of the power source (also check for load condition).
- For detailed specification of the filter, contact the manufacturer.
- When you install one noise filter at the power supply for multi-axes application, contact the manufacturer of the noise filter.

Surge Absorber

Provide a surge absorber for the primary side of noise filter.

Option part No.	Voltage specifications for driver	Manufacturer's part No.	Manufacturer
DV0P1450	3-phase 200 V	R·A·V-781BXZ-4	Okaya Electric Ind.
DV0P4190	Single phase 100 V, 200 V	R·A·V-781BWZ-4	

[DV0P1450]

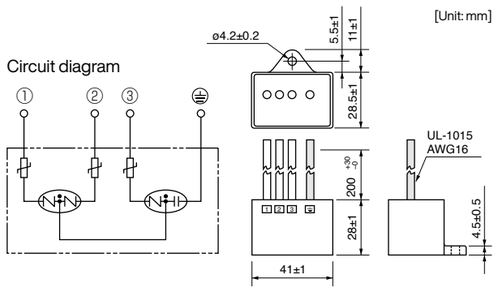

[DV0P4190]

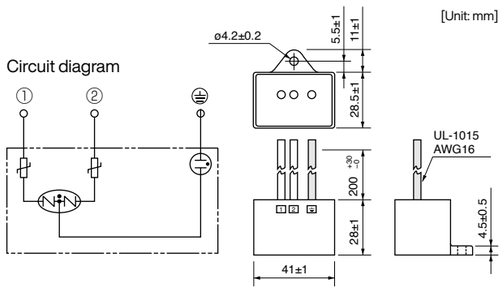

<Remarks>

Remove this surge absorber when you perform dielectric test on the machine, or surge absorber might be damaged.

Ferrite core

■Install ferrite core to power cable and motor cable

Symbol*1	Cable Name	Applicable driver (frame)	Option part No.	Manufacturer's part No.	Manufacturer	Required number
NF1	Power cable	A, B, E	DV0P1460	ZCAT3035-1330	TDK Corp.	1
		G, H				3
			—	RJ8095	Konno Kogyosho Co.Ltd	1
NF2	Motor cable	A, B, C, D, E	DV0P1460	ZCAT3035-1330	TDK Corp.	1
		F				2
		G, H				3
			—	T400-61D	MICROMETALS	1

*1 For symbols, refer to the Block Diagram “Installation Environment” (P.411).

- The number of turns is all 1.
- NF1 is not required for C frame, D frame, F frame.

<Remarks>

To connect the ferrite core to the connector XB connection cable, adjust the sheath length at the tip of the cable, as required.

<Caution>

Fix the ferrite core in order to prevent excessive stress to the cables.

Fig.1: DV0P1460 (Option) 4 pieces

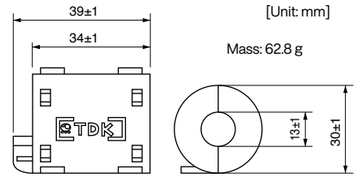

Fig.3: T400-61D (Recommended components) 1 pieces

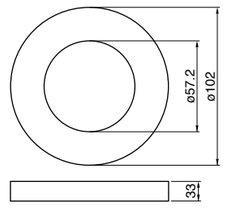

Fig.2: RJ8095 (Recommended components) 1 pieces

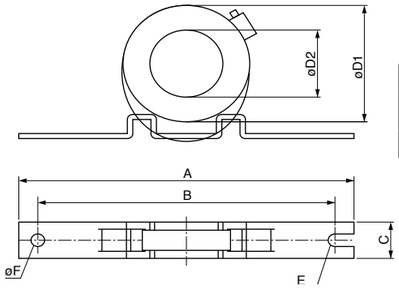

Manufacturer's part No.	Current value	100 kHz (μH)	Size [Unit: mm]							
			A	B	C	D1	D2	Core thickness	E	F
RJ8095	95 A	7.9±3	200	180	34	130	107	35	R3.5	7

Residual Current Device

Install a type B Residual current device (RCD) at primary side of the power supply.
Type B: Residual current device which detects a direct-current ingredient.

Grounding

(1) Connect the protective earth terminal (⏚) of the driver and the protective earth terminal (PE) of the control box without fail to prevent electrical shocks.
(2) Do not make a joint connection to the protective earth terminals (⏚). 2 terminals are provided for protective earth.

<Note>

For driver and applicable peripheral devices, refer to P.27 “Driver and List of Applicable Peripheral Devices”.

Compliance to EU/ UK Regulation and EMC Directives

EU Directives/ UK Regulation

The EU Directives/ UK Regulation apply to all such electronic products as those having specific functions and have been exported to EU and directly sold to general consumers. Those products are required to conform to the EU unified standards and to furnish the CE marking on the products. MINAS AC Servos conforms to the EU Directives for EU Low Voltage Directives/ UK Low Voltage Regulation Equipment so that the machine incorporating our servos has an easy access to the conformity to relevant EU Directives for the machine.

EU EMC Directives/UK EMC Regulation

MINAS Servo System conform to relevant standard under EU EMC Directives/UK EMC Regulation setting up certain model (condition) with certain locating distance and wiring of the servo motor and the driver. And actual working condition often differs from this model condition especially in wiring and grounding. Therefore, in order for the machine to conform to the EU EMC Directives/UK EMC Regulation, especially for noise emission and noise terminal voltage, it is necessary to examine the machine incorporating our servos.

Conformed Standards

Subject	Conformed Standard		
Motor	IEC60034-1	IEC60034-5 UL1004 CSA22.2 No.100	Conforms to EU Low Voltage Directives/UK Low Voltage Regulation
Motor and driver		UL61800-5-1 CSA22.2 No.14	
	EN55011	Radio Disturbance Characteristics of Industrial, Scientific and Medical (ISM) Radio-Frequency Equipment	Conforms to references by EU EMC Directives/ UK EMC Regulation
	EN61000-6-2	Immunity for Industrial Environments	
	IEC61000-4-2	Electrostatic Discharge Immunity Test	
	IEC61000-4-3	Radio Frequency Electromagnetic Field Immunity Test	
	IEC61000-4-4	Electric High-Speed Transition Phenomenon/Burst Immunity Test	
	IEC61000-4-5	Lightening Surge Immunity Test	
	IEC61000-4-6	High Frequency Conduction Immunity Test	
	IEC61000-4-11	Instantaneous Outage Immunity Test	

IEC : International Electrotechnical Commission
EN : Europaischen Normen
EMC : Electromagnetic Compatibility
UL : Underwriters Laboratories
CSA : Canadian Standards Association

Pursuant to at the directive 2004/108/EC, article 9(2)

Composition of Peripheral Components

<Precautions in using options>
Use options correctly after reading operation manuals of the options to better understand the precautions. Take care not to apply excessive stress to each optional part.

Installation Environment

Use Minas driver in environment of Pollution Degree 1 or 2 prescribed in IEC-60664-1 (e.g. Install the driver in control panel with IP54 protection structure.)

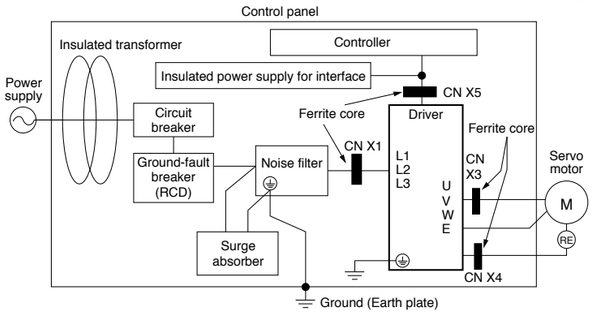

Power Supply

100 V system	Single phase, 100 V	+10 % –15 %	to	115 V	+10 % –15 %	50 Hz/60 Hz
200 V system	Single phase, 200 V	+10 % –15 %	to	240 V	+10 % –15 %	50 Hz/60 Hz
200 V system	3-phase, 200 V	+10 % –15 %	to	240 V	+10 % –15 %	50 Hz/60 Hz

(1) Use the power supply under an environment of Overvoltage Category II specified in IEC60664-1.
(2) For a interface power supply, use the insulated one with 12 VDC to 24 VDC which conforms to CE Marking or EN Standards (EN60950).

Circuit Breaker

Connect a circuit breaker which conforms to IEC standards and is UL recognized (UL Listed, Ⓤ marked), between the power supply and the noise filter.

Noise Filter

When you install one noise filter in the power supply for multi axis application, consult with the manufacture of the filter.

Option part No.	Part No.	Manufacturer
DV0P4160	3SUP-HU10-ER-6	Okaya Electric Industries Co.

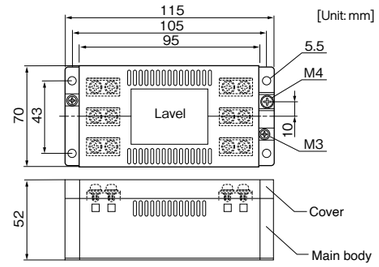

Surge Absorber

Install a surge absorber at primary side of the noise filter.

Option part No.	Driver voltage spec	Part No.	Manufacturer
DV0P1450	3-phase, 200 V	R·A·V-781BXZ-4	Okaya Electric

[Unit: mm]

Circuit diagram

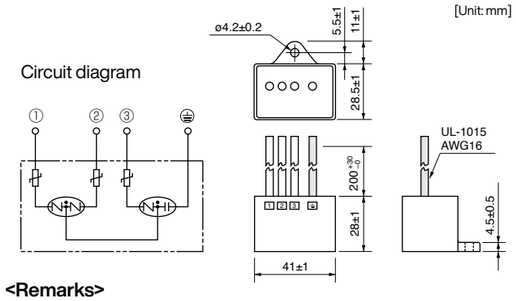

Option part No.	Driver voltage spec	Part No.	Manufacturer
DV0P4190	Single phase, 100 V, 200 V	R·A·V-781BWZ-4	Okaya Electric

[Unit: mm]

Circuit diagram

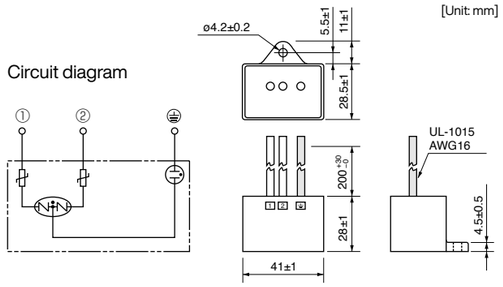

<Remarks>
Remove this surge absorber when you perform dielectric test on the machine, or surge absorber might be damaged.

Ferrite core

Install ferrite core to all cables (Power line, motor cable, encoder cable, interface cable)

<Caution>
- Please fix a ferrite core to avoid excessive stress to the cable.
- When using multiple axes, noise generated from each driver might influence driver and peripheral equipment and result to malfunction. Please insert a ferrite core between driver and motor wires (U, V, W but grounding).
(Please refer to P.415 "Composition of Peripheral Components".)

Option part No.	Part No.	Qty.	Manufacturer
DV0P1460	ZCAT3035-1330	4	TDK Corp.

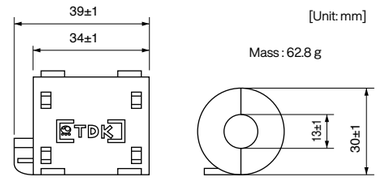

Grounding

(1) Connect the protective earth terminal of the driver (⏚) and protective earth terminal of the control panel (PE) without fail to prevent electrical shocks.
(2) Do not co-clamp to the ground terminals (⏚). Two ground terminals are provided.

Ground-Fault Breaker

Install a ground fault curcuit braker (RCD) to the primary side of the power supply.
Please use B-type (DC sensitive) ground fault circuit breakers defined in IEC60947-2, JISC8201-2-2.

AC Servo Motor Capacity Selection Software

We have prepared PC software "M-SELECT" for AC servo motor capacity selection.
Consult our sales representative or authorized distributor.

▪ Three-step selection

1. Select components and specified values

Select appropriate mechanical parameter items and fill them with parameter values derived from the real machine. To simulate the target machine as practical as possible, use maximum number of parameters available.



2. Enter operation pattern

Input the planned operation pattern that will contain [speed and rotation standard] or [absolute position standard] with optional settings such as S-acceleration/deceleration.



3. Select the motor

When the data required in step 1 and 2 above have been input, the software lists the motors, which will be appropriate to use with your machine. Select the motor that is best suitable for your machine application.



Details of motor

Once the motor is selected, specifications of the motor and driver, and details of reason for determination are displayed and may be printed out.

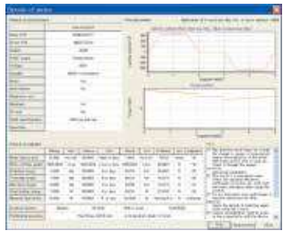

Option Selection Software for AC Servo Motor

We have prepared PC software to enable fast, easy, and correct option selection, a complicated job without the software.

▪ Two procedures for option selection

1. Selection according to driver series and motor type

Suitable option can be selected by selecting driver series, motor type and motor specification through pulldown menu.

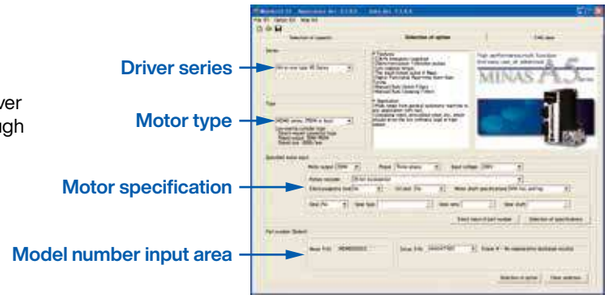

2. Entry of model number

If you know the model number based on the servo motor and driver currently used, enter the model number.

Result of selection

Tab sheet specific to each of option model numbers is used for easier identification of the desired option.

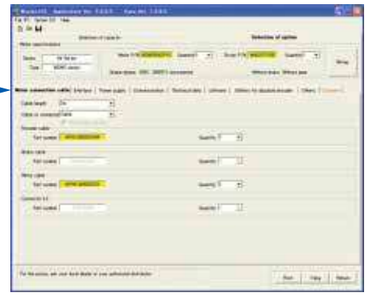

* When you are using the motor capacity selection software, simply press [Option Selection] tab and the screen as shown right will appear.

Please download from our web site and use after install to the PC.
https://industrial.panasonic.com/ww/products/motors-compressors/fa-motors/ac-servo-motors/minas-a5-panaterm

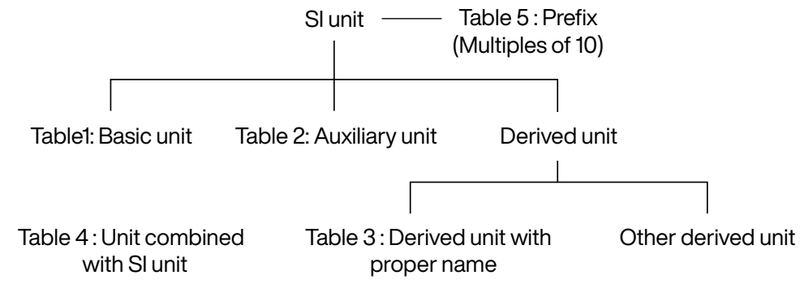

Table1: Basic unit

Quantity	Name of unit	Symbol of unit
Length	meter	m
Weight	kilogram	kg
Time	second	s
Current	ampere	A
Thermodynamic temperature	kelvin	K
Amount of substance	mol	mol
Luminous intensity	candela	cd

Table 2: Auxiliary unit

Quantity	Name of unit	Symbol of unit
Plane angle	radian	rad
Solid angle	steradian	sr

Table 3: Major derived unit with proper name

Quantity	Name	Symbol of unit	Derivation from basic unit, auxiliary unit or other derived unit
Frequency	hertz	Hz	$1\,Hz = 1\,s^{-1}$
Force	newton	N	$1\,N = 1\,kg{\cdot}m/s^2$
Pressure, Stress	pascal	Pa	$1\,Pa = 1\,N/m^2$
Energy, Work, Amount of heat	joule	J	$1\,J = 1\,N{\cdot}m$
Amount of work, Work efficiency, Power, Electric power	watt	W	$1\,W = 1\,J/s$
Electric charge, Amount of electricity	coulomb	C	$1\,C = 1\,A{\cdot}s$
Electric potential, Potential difference, Voltage, Electromotive force	volt	V	$1\,V = 1\,J/C$
Electrostatic capacity, Capacitance	farad	F	$1\,F = 1\,C/V$
Electric resistance	ohm	Ω	$1\,\Omega = 1\,V/A$
Electric conductance	siemens	S	$1\,S = 1\,\Omega^{-1}$
Magnetic flux	weber	Wb	$1\,Wb = 1\,V{\cdot}s$
Magnetic flux density, Magnetic induction	tesla	T	$1\,T = 1\,Wb/m^2$
Inductance	henry	H	$1\,H = 1\,Wb/A$
Degree centigrade (Celsius)	degree centigrade (Celsius) / degree	°C	$t\,°C = (t+273.15)\,K$
Luminous flux	lumen	lm	$1\,lm = 1\,cd{\cdot}sr$
Illuminance	lux	lx	$1\,lx = 1\,lm/m^2$

Table 4: Unit combined with SI unit

Quantity	Name	Symbol of unit
Time	minute	min
	hour	h
	day	d
Plane angle	degree	°
	minute	'
	second	"
Volume	liter	l, L
Weight	ton	t

Table 5: Prefix

Multiples powered to unit	Prefix	
	Name	Symbol
10^{18}	exa	E
10^{15}	peta	P
10^{12}	tera	T
10^{9}	giga	G
10^{6}	mega	M
10^{3}	kilo	k
10^{2}	hecto	h
10	deca	da
10^{-1}	deci	d
10^{-2}	centi	c
10^{-3}	milli	m
10^{-6}	micro	μ
10^{-9}	nano	n
10^{-12}	pico	p
10^{-15}	femto	f
10^{-18}	atto	a

Major Compatible Unit

Quantity	Symbol of conventional unit	Symbol of SI unit and compatible unit	Conversion value
Length	μ (micron)	μm	1 μ = 1 μm (micrometer)
Acceleration	Gal	m/s^2	1 Gal = 10^{-2} m/s^2
	G	m/s^2	1 G = 9.80665 m/s^2
Frequency	c/s, c	Hz	1 c/s = Hz
Revolving speed, Number of revolutions	rpm	s^{-1} or min^{-1}, r/min	1 rpm = 1 min^{-1}
Weight	kgf	–	Same value
Mass	–	kg	
Weight flow rate	kgf/s	–	Same value
Mass flow rate	–	kg/s	
Specific weight	kgf/m^3	–	Same value
Density	–	kg/m^3	
Specific volume	m^3/kgf	m^3/kg	Same value
Load	kgf	N	1 kgf = 9.80665 N
Force	kgf	N	1 kgf = 9.80665 N
	dyn	N	1 dyn = 10^{-5} N
Moment of force	kgf·m	N·m	1 kgf·m = 9.806 N·m
Pressure	kgf/cm^2	Pa, bar (1) or kgf/cm^2	1 kgf/cm^2 = 9.80665 x 10^4 Pa = 0.980665 bar
	at (Engineering atmospheric pressure)	Pa	1 at = 9.80665 x 10^4 Pa
	atm (Atmospheric pressure)	Pa	1 atm = 1.01325 x 10^5 Pa
	mH_2O, mAq	Pa	1 mH_2O = 9.80665 x 10^3 Pa
	mmHg	Pa or mmHg (2)	1 mmHg = 133.322 Pa
	Torr	Pa	
Stress	kgf/mm^2	Pa or N/m^2	1 kgf/mm^2 = 9.80665 x 10^6 Pa =9.80665 x 10^6 N/m^2
	kgf/cm^2	Pa or N/m^2	1 kgf/cm^2 = 9.80665 x 10^4 Pa = 9.80665 x 10^4 N/m^2
Elastic modulus	kgf/m^2	Pa or N/m^2	1 kgf/m^2 = 9.80665 Pa = 9.80665 N/m^2 1 kgf/cm^2 = 9.80665 x 10^4 N/m^2
Energy, Work	kgf·m	J (joule)	1 kgf·m = 9.80665 J
	erg	J	1 erg = 10^{-7} J
Work efficiency, Power	kgf·m/s	W (watt)	1 kgf·m/s = 9.80665 W
	PS	W	1 PS = 0.7355 kW
Viscosity	PP	Pa·s	1 P = 0.1 Pa·s
Kinetic viscosity	St	mm^2/s	10^{-2} St = 1 mm^2/s
Thermodynamic temperature	K	K (kelvin)	1 K = 1 K
Temperature interval	deg	K (3)	1 deg = 1 K
Amount of heat	cal	J	1 cal = 4.18605 J
Heat capacity	cal/°C	J/K (3)	1 cal/°C = 4.18605 J/K
Specific heat, Specific heat capacity	cal/ (kgf·°C)	cal/ (kgf·K)(3)	1 cal/ (kgf·°C) = 4.18605 J/ (kg·K)
Entropy	cal/K	J/K	1 cal/K = 4.18605 J/K
Specific entropy	cal/ (kgf·K)	J/(kg·K)	1 cal/ (kgf·K) = 4.18605 J/ (kg·K)
Internal energy (Enthalpy)	cal	J	1 cal = 4.18605 J
Specific internal energy (Specific enthalpy)	cal/kgf	J/kg	1 cal/kgf = 4.18605 J/kg
Heat flux	cal/h	W	1 kcal/h = 1.16279 W
Heat flux density	cal/ (h·m^2)	W/m^2	1 kcal/ (h·m^2) = 1.16279 W/m^2
Thermal conductivity	cal/ (h·m·°C)	W/ (m·K) (3)	1 kcal/ (h·m·°C) = 1.16279 W/ (m·K)
Coefficient of thermal conductivity	cal/ (h·m^2·°C)	W/ (m^2·K) (3)	1 kcal/ (h·m^2·°C) = 1.16279 W/ (m^2·K)
Intensity of magnetic field	Oe	A/m	1 Oe = 10^3 / (4π) A/m
Magnetic flux	Mx	Wb (weber)	1 Mx = 10^{-8} Wb
Magnetic flux density	Gs,G	T (tesla)	1 Gs = 10^{-4} T

Note
(1) Applicable to liquid pressure. Also applicable to atmospheric pressure of meteorological data, when “bar” is used in international standard.
(2) Applicable to scale or indication of blood pressure manometers.
(3) “°C” can be substituted for “K”.

Flow of Motor Selection

1. Definition of mechanism to be driven by motor.

Define details of individual mechanical components (ball screw length, lead and pulley diameters, etc.)

<Typical mechanism>

Ball screw mechanism

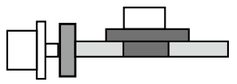

Belt mechanism

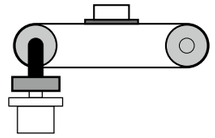

Rack & pinion, etc.

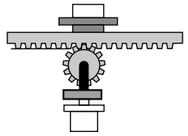

2. Definition of operating pattern.

Acceleration/deceleration time, Constant-velocity time, Stop time, Cycle time, Travel distance

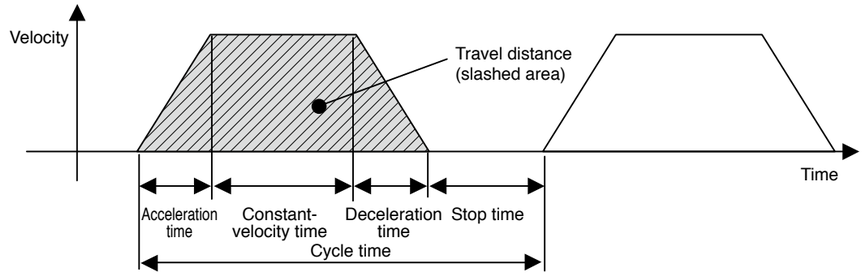

Note) Selection of motor capacity significantly varies depending on the operating pattern.
The motor capacity can be reduced if the acceleration/deceleration time and stop time are set as long as possible.

3. Calculation of load inertia and inertia ratio.

Calculate load inertia for each mechanical component. (Refer to "General inertia calculation method" described later.)
Divide the calculated load inertia by the inertia of the selected motor to check the inertia ratio.
For calculation of the inertia ratio, note that the catalog value of the motor inertia is expressed as "× 10^{-4} kg·m^2".

4. Calculation of motor velocity

Calculate the motor velocity from the moving distance, acceleration / deceleration time and constant-velocity time.

5. Calculation of torque

Calculate the required motor torque from the load inertia, acceleration/deceleration time and constant-velocity time.

6. Calculation of motor

Select a motor that meets the above 3 to 5 requirements.

Description on the Items Related to Motor Selection

1. Torque

(1) Peak torque

Indicate the maximum torque that the motor requires during operation (mainly in acceleration and deceleration steps). The reference value is 80% or less of the maximum motor torque. If the torque is a negative value, a regenerative discharge resistor may be required.

(2) Traveling torque, Stop holding torque

Indicates the torque that the motor requires for a long time. The reference value is 80% or less of the rated motor torque. If the torque is a negative value, a regenerative discharge resistor may be required.

Traveling torque calculation formula for each mechanism

Ball screw mechanism

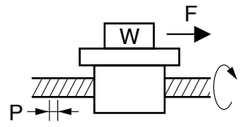

Traveling torque $T_f = \frac{P}{2\pi\eta}(\mu g W + F)$

W : Weight [kg]
P : Lead [m]
F : External force [N]
η : Mechanical efficiency
μ : Coefficient of friction
g : Acceleration of gravity 9.8[m/s^2]

Belt mechanism

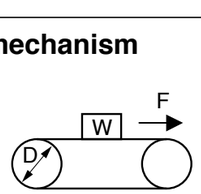

Traveling torque $T_f = \frac{D}{2\pi\eta}(\mu g W + F)$

W : Weight [kg]
P : Pulley diameter [m]
F : External force [N]
η : Mechanical efficiency
μ : Coefficient of friction
g : Acceleration of gravity 9.8[m/s^2]

(3) Effective torque

Indicates a root-mean-square value of the total torque required for running and stopping the motor per unit time. The reference value is approx. 80% or less of the rated motor torque.

$$Trms = \sqrt{\frac{Ta^2 \times ta + Tf^2 \times tb + Td^2 \times td}{tc}}$$

T_a : Acceleration torque [N·m]
T_f : Traveling torque [N·m]
T_d : Deceleration torque [N·m]
t_a : Acceleration time [s]
t_b : Constant-velocity time [s]
t_d : Deceleration time [s]
t_c : Cycle time [s] (Run time + Stop time)

2. Motor velocity

Maximum velocity

Maximum velocity of motor in operation: The reference value is the rated velocity or lower value.
When the motor runs at the maximum velocity, you must pay attention to the motor torque and temperature rise. For actual calculation of motor velocity, see "Example of motor selection" described later.

3. Inertia and inertia ratio

Inertia is like the force to retain the current moving condition.
Inertia ratio is calculated by dividing load inertia by rotor inertia.
Generally, for motors with 750 W or lower capacity, the inertia ratio should be “20” or less. For motors with 1000 W or higher capacity, the inertia ratio should be “10” or less.
If you need quicker response, a lower inertia ratio is required.
(For example, when the motor takes several seconds in acceleration step, the inertia ratio can be further increased.)

General inertia calculation method

Shape	J calculation formula	Shape	J calculation formula
Disk 	$J = \frac{1}{8} W D^2$ [kg·m^2] W : Weight [kg] D : Outer diameter [m]	**Hollow cylinder** 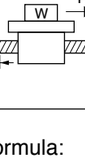	$J = \frac{1}{8} W (D^2 + d^2)$ [kg·m^2] W : Weight [kg] D : Outer diameter [m] d : Inner diameter [m]
Prism	$J = \frac{1}{12} W (a^2 + b^2)$ [kg·m^2] W : Weight [kg] a, b, c : Side length [m]	**Uniform rod**	$J = \frac{1}{48} W (3D^2 + 4L^2)$ [kg·m^2] W : Weight [kg] D : Outer diameter [m] L : Length [m]
Straight rod	$J = \frac{1}{3} W L^2$ [kg·m^2] W : Weight [kg] L : Length [m]	**Separated rod**	$J = \frac{1}{8} W D^2 + W S^2$ [kg·m^2] W : Weight [kg] D : Outer diameter [m] S : Distance [m]
Reduction gear	Inertia on shaft "a" $J = J_1 + (\frac{n_2}{n_1})^2 J_2$[kg·m^2] n_1 : A rotational speed of a shaft [r/min] n_2 : A rotational speed of b shaft [r/min]		
Conveyor	$J = \frac{1}{4} W D^2$ [kg·m^2] W : Workpiece weight on conveyor [kg] D : Drum diameter [m] * Excluding drum J	**Ball screw**	$J = J_B + \frac{W \cdot P^2}{4\pi^2}$ [kg·m^2] W : Weight [kg] P : Lead J_B : J of ball screw

If weight (W [kg]) is unknown, calculate it with the following formula:
Weight W[kg]=Density ρ [kg/m^3] x Volume V[m^3]
Density of each material
Iron ρ =7.9 x 10^3 [kg/m^3] Aluminum ρ =2.8 x 10^3 [kg/m^3]
Brass ρ =8.5 x 10^3 [kg/m^3]

To Drive Ball Screw Mechanism

1. Example of motor selection for driving ball screw mechanism

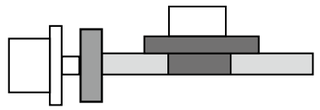

Workpiece weight $W_A = 10$ [kg]
Ball screw length $B_L = 0.5$ [m]
Ball screw diameter $B_D = 0.02$ [m]
Ball screw lead $B_P = 0.02$ [m]
Ball screw efficiency $B\eta = 0.9$
Travel distance 0.3[m]
Coupling inertia $J_C = 10 \times 10^{-6}$ [kg·m²] (Use manufacturer-specified catalog value, or calculation value.)

2. Running pattern :

Acceleration time $t_a = 0.1$ [s]
Constant-velocity time $t_b = 0.8$ [s]
Deceleration time $t_d = 0.1$ [s]
Cycle time $t_c = 2$ [s]
Travel distance 0.3[m]

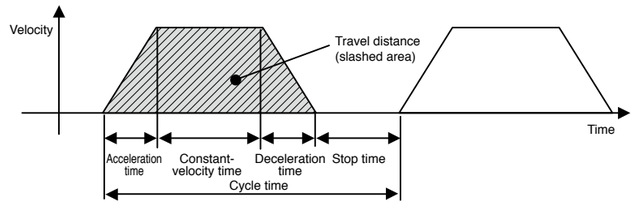

3. Ball screw weight

$$B_W = \rho \times \pi \times \left(\frac{B_D}{2}\right)^2 \times B_L = 7.9 \times 10^3 \times \pi \times \left(\frac{0.02}{2}\right)^2 \times 0.5$$
$$= 1.24 \text{ [kg]}$$

4. Load inertia

$$J_L = J_C + J_B = J_C + \frac{1}{8} B_W \times B_D^2 + \frac{W_A \cdot B_P^2}{4\pi^2}$$
$$= 0.00001 + (1.24 \times 0.02^2) / 8 + 10 \times 0.02^2 / 4\pi^2$$
$$= 1.73 \times 10^{-4} \text{ [kg·m²]}$$

5. Provisional motor selection

In case of MSMF 200 W motor : $J_M = 0.14 \times 10^{-4}$ [kg·m²]

6. Calculation of inertia ratio

$J_L / J_M = 1.73 \times 10^{-4} / 0.14 \times 10^{-4}$ Therefore, the inertia ratio is "12.3" (less than "30")
(In case of MSMF 100 W motor: $J_M = 0.048 \times 10^{-4}$ Therefore, the inertia ratio is "36.0".)

7. Calculation of maximum velocity (Vmax)

$$\frac{1}{2} \times \text{Acceleration time} \times \text{Vmax} + \text{Constant-velocity time} \times \text{Vmax} + \frac{1}{2} \times \text{Deceleration time} \times \text{Vmax} = \text{Travel distance}$$
$$\frac{1}{2} \times 0.1 \times \text{Vmax} + 0.8 \times \text{Vmax} + \frac{1}{2} \times 0.1 \times \text{Vmax} = 0.3$$
$$0.9 \times \text{Vmax} = 0.3$$
$$\text{Vmax} = 0.3 / 0.9 = 0.334 \text{ [m/s]}$$

8. Calculation of motor velocity (N [r/min]) Ball screw lead per resolution: $B_P = 0.02$ [m]

$N = 0.334 / 0.02 = 16.7$ [r/s]
$= 16.7 \times 60 = 1002$ [r/min] < 3000 [r/min] (Rated velocity of MSMF 200 W motor)

9. Calculation of torque

Traveling torque $T_f = \frac{B_P}{2\pi B\eta} (\mu g W_A + F) = \frac{0.02}{2\pi \times 0.9} (0.1 \times 9.8 \times 10 + 0)$
$= 0.035$ [N·m]

Acceleration torque $T_a = \frac{(J_L + J_M) \times 2\pi N[r/s]}{\text{Acceleration time [s]}}$ + Traveling torque
$= \frac{(1.73 \times 10^{-4} + 0.14 \times 10^{-4}) \times 2\pi \times 16.7}{0.1} + 0.035$
$= 0.196 + 0.035 = 0.231$ [N·m]

Deceleration torque $T_d = \frac{(J_L + J_M) \times 2\pi N[r/s]}{\text{Deceleration time [s]}}$ – Traveling torque
$= \frac{(1.73 \times 10^{-4} + 0.14 \times 10^{-4}) \times 2\pi \times 16.7}{0.1} - 0.035$
$= 0.196 - 0.035 = 0.161$ [N·m]

10. Verification of maximum torque

Acceleration torque = $T_a = 0.231$ [N·m] < 1.91 [N·m] (Maximum torque of MSMF 200 W motor)

11. Verification of effective torque

$$T_{rms} = \sqrt{\frac{T_a^2 \times t_a + T_f^2 \times t_b + T_d^2 \times t_d}{t_c}}$$
$$= \sqrt{\frac{0.231^2 \times 0.1 + 0.035^2 \times 0.8 + 0.161^2 \times 0.1}{2}}$$
$$= 0.067 \text{ [N·m]} < 0.64 \text{ [N·m]} \text{ (Rated torque of MSMF 200 W motor)}$$

12. Judging from the inertia ratio calculated above, selection of 200 W motor is preferable, although the torque margin is significantly large.

Example of Motor Selection

Example of motor selection for timing belt mechanism

1.Mechanism
Workpiece weight $W_A = 2$[kg] (including belt)
Pulley diameter $P_D = 0.05$[m]
Pulley weight $W_P = 0.5$[kg] (Use manufacturer-specified catalog value, or calculation value.)
Mechanical efficiency $B\eta = 0.8$
Coupling inertia $J_C = 0$ (Direct connection to motor shaft)
Belt mechanism inertia J_B
Pulley inertia J_P

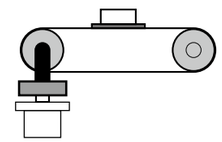

2. Running pattern

Acceleration time $t_a = 0.1$[s]
Constant-velocity time $t_b = 0.8$[s]
Deceleration time $t_d = 0.1$[s]
Cycle time $t_c = 2$[s]
Travel distance 1[m]

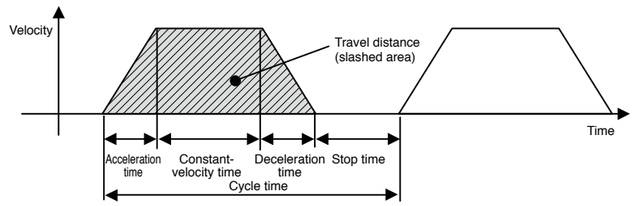

3. Load inertia $J_L = J_C + J_B + J_P$

$$= J_C + \frac{1}{4} W_A \times P_D^2 + \frac{1}{8} W_P \times P_D^2 \times 2$$
$$= 0 + \frac{1}{4} \times 2 \times 0.05^2 + \frac{1}{8} \times 0.5 \times 0.05^2 \times 2$$
$$= 0.00156 = 15.6 \times 10^{-4} \text{ [kg·m²]}$$

4. Provisional motor selection

In case of MSMF 750 W motor : $J_M = 0.96 \times 10^{-4}$ [kg·m²]

5. Calculation of inertia ratio

$J_L / J_M = 15.6 \times 10^{-4} / 0.96 \times 10^{-4}$ Therefore, the inertia ratio is "16.3" (less than "20")

6. Calculation of maximum velocity (Vmax)

$$\frac{1}{2} \times \text{Acceleration time} \times \text{Vmax} + \text{Constant-velocity time} \times \text{Vmax} + \frac{1}{2} \times \text{Deceleration time} \times \text{Vmax} = \text{Travel distance}$$

$$\frac{1}{2} \times 0.1 \times \text{Vmax} + 0.8 \times \text{Vmax} + \frac{1}{2} \times 0.1 \times \text{Vmax} = 1$$

$$0.9 \times \text{Vmax} = 1$$

$$\text{Vmax} = 1 / 0.9 = 1.111[\text{m/s}]$$

7. Calculation of motor velocity (N [r/min])

A single rotation of pulley : $\pi \times P_D = 0.157[\text{m}]$

$N = 1.111 / 0.157 = 7.08[\text{r/s}]$

$= 7.08 \times 60 = 424.8[\text{r/min}] < 3000[\text{r/min}]$ (Rated velocity of MSMF 750 W motor)

8. Calculation of torque

Traveling torque

$$T_f = \frac{P_D}{2\eta}(\mu g W_A + F) = \frac{0.05}{2 \times 0.8}(0.1 \times 9.8 \times 3 + 0)$$

$$= 0.061[\text{N·m}]$$

Acceleration torque

$$T_a = \frac{(J_L + J_M) \times 2\pi N[\text{r/s}]}{\text{Acceleration time}[\text{s}]} + \text{Traveling torque}$$

$$= \frac{(15.6 \times 10^{-4} + 0.96 \times 10^{-4}) \times 2\pi \times 7.08}{0.1} + 0.061$$

$$= 0.736 + 0.061 = 0.797[\text{N·m}]$$

Deceleration torque

$$T_d = \frac{(J_L + J_M) \times 2\pi N[\text{r/s}]}{\text{Deceleration time}[\text{s}]} - \text{Traveling torque}$$

$$= \frac{(15.6 \times 10^{-4} + 0.96 \times 10^{-4}) \times 2\pi \times 7.08}{0.1} - 0.061$$

$$= 0.736 - 0.061 = 0.675[\text{N·m}]$$

9. Verification of maximum torque

Acceleration torque $T_a = 0.797[\text{N·m}] < 7.1[\text{N·m}]$ (Maximum torque of MSMF 750 W motor)

10. Verification of effective torque

$$T_{rms} = \sqrt{\frac{T_a^2 \times t_a + T_f^2 \times t_b + T_d^2 \times t_d}{t_c}}$$

$$= \sqrt{\frac{0.797^2 \times 0.1 + 0.061^2 \times 0.8 + 0.675^2 \times 0.1}{2}}$$

$$= 0.237[\text{N·m}] < 2.4[\text{N·m}]$$ (Rated torque of MSMF 750 W motor)

11. Judging from the above calculation result, selection of MSMF 750W motor is acceptable.

Request Sheet for Motor Selection

Request for motor selection Ⅰ : Ball screw drive

1. Driven mechanism and running data

1)	Travel distance of the work load per one cycle	ℓ_1:	mm
2)	Cycle time	t_0:	s
	(Fill in items 3) and 4) if required.)		
3)	Acceleration time	t_a:	s
4)	Deceleration time	t_d:	s
5)	Stopping time	t_s:	s
6)	Max. velocity	V:	mm/s
7)	External force	F:	N
8)	Positioning accuracy of the work load	±	mm
9)	Total weight of the work load and the table	W_A:	kg
10)	Power supply voltage		V
11)	Diameter of the ball screw		mm
12)	Total length of the ball		mm
13)	Lead of the ball screw		mm
14)	Traveling direction (horizontal, vertical etc.)		

Running pattern

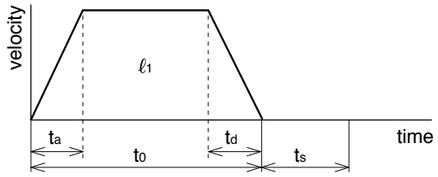

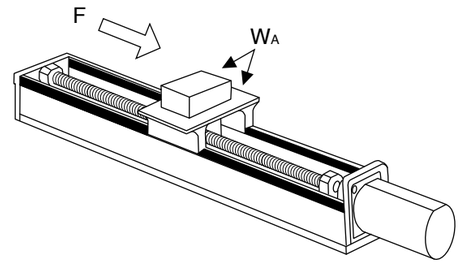

2. Other data (Fill the details on specific mechanism and its configurations in the following blank.)

	Company name :
	Department/Section :
	Name :
	Address :
	Tel :
	Fax :
	E-mail address:

Request Sheet for Motor Selection

Request for motor selection Ⅱ : Timing pulley + Ball screw drive

1. Driven mechanism and running data

				Motor side	Ball screw side
1)	Travel distance of the work load per one cycle	ℓ_1: mm	15) Diameter of the pulley	D_1: mm	D_2: mm
2)	Cycle time	to: s	16) Weight of the pulley	W_1: kg	W_2: kg
	(Fill in items 3) and 4) if required.)		(or item 17) and 18))		
3)	Acceleration time	ta: s	17) Width of the pulley	L1: mm	
4)	Deceleration time	td: s	18) Material of the pulley		
5)	Stopping time	ts: s	19) Weight of the belt	W_M: kg	
6)	Max. velocity	V: mm/s			
7)	External force	F: N			
8)	Positioning accuracy of the work load	± mm			
9)	Total weight of the work load and the table	W_A: kg			
10)	Power supply voltage	V			
11)	Diameter of the ball screw	mm			
12)	Total length of the ball screw	mm			
13)	Lead of the ball screw	mm			
14)	Traveling direction (horizontal, vertical etc.)				

Running pattern

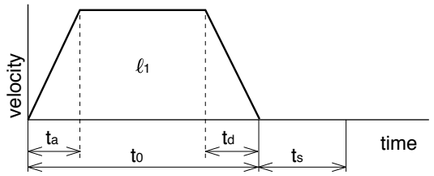

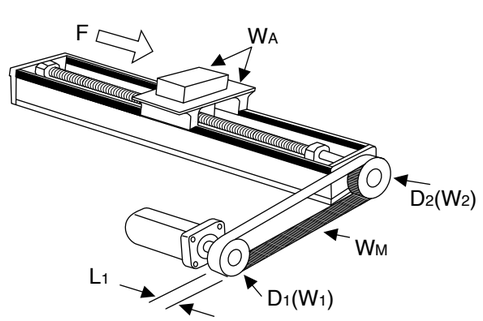

2. Other data (Fill the details on specific mechanism and its configurations in the following blank.)

	Company name :
	Department/Section :
	Name :
	Address :
	Tel :
	Fax :
	E-mail address:

Request Sheet for Motor Selection

Request for motor selection Ⅲ : Belt drive

1. Driven mechanism and running data

1)	Travel distance of the work load per one cycle	ℓ_1: mm		
2)	Cycle time	to: s		
	(Fill in items 3) and 4) if required.)			
3)	Acceleration time	ta: s		
4)	Deceleration time	td: s		
5)	Stopping time	ts: s		
6)	Max. velocity	V: mm/s		
7)	External force	F: N		
8)	Positioning accuracy of the work load	± mm		
9)	Total weight of the work load	W_A: kg		
10)	Power supply voltage	V		
11)	Weight of the belt	W_M: kg	14) Width of the pulley	L_1: mm
12)	Diameter of the driving pulley	D_1: mm	15) Material of the pulley	
13)	Total weight of the pulley	W_1: kg	16) Traveling direction (horizontal, vertical etc.)	

Running pattern

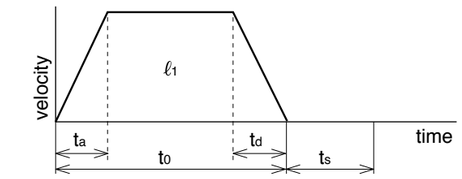

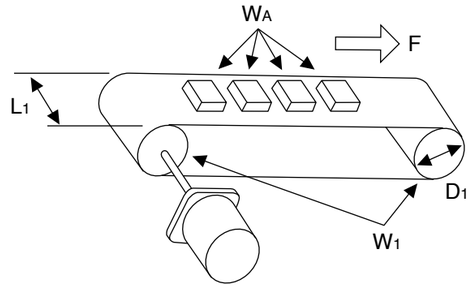

(or item 14) and 15))

2. Other data (Fill the details on specific mechanism and its configurations in the following blank.)

	Company name :
	Department/Section :
	Name :
	Address :
	Tel :
	Fax :
	E-mail address:

Request Sheet for Motor Selection

Request for motor selection Ⅳ : Timing pulley + Belt drive

1. Driven mechanism and running data

1)	Travel distance of the work load per one cycle	ℓ_1:	mm		
2)	Cycle time	t_0:	s		
	(Fill in items 3) and 4) if required.)				
3)	Acceleration time	t_a:	s		
4)	Deceleration time	t_d:	s		
5)	Stopping time	t_s:	s		
6)	Max. velocity	V:	mm/s		
7)	External force	F:	N		
8)	Positioning accuracy of the work load	±	mm		
9)	Total weight of the work load	W_A:	kg		
10)	Power supply voltage		V		
11)	Weight of motor side belt	W_M:	kg		

		Motor side		Belt side	
12)	Diameter of the pulley	D_1:	mm	D_2:	mm
13)	Weight of the pulley	W_1:	kg	W_2:	kg
	(or item 14) and 15))				
14)	Width of the belt	L_1:	mm		
15)	Material of the pulley				

		Motor side		Belt side	
16)	Diameter of the pulley	D_3:	mm	D_4:	mm
17)	Weight of the pulley	W_3:	kg	W_4:	kg
	(or item 18) and 19))				
18)	Width of the pulley	L_2:	mm		
19)	Material of the pulley				
20)	Weight of the belt	W_L:	kg		
21)	Traveling direction (horizontal, vertical etc.)				

Running pattern

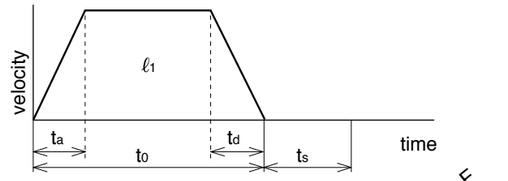

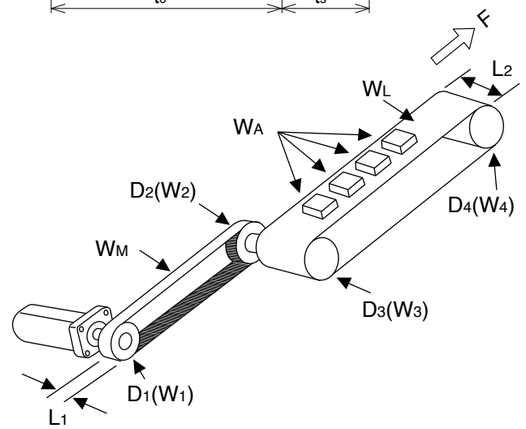

2. Other data (Fill the details on specific mechanism and its configurations in the following blank.)

Company name :
Department/Section :
Name :
Address :
Tel :
Fax :
E-mail address:

Request Sheet for Motor Selection

Request for motor selection Ⅴ : Turntable drive

1. Driven mechanism and running data

1)	Travel distance of the work load per one cycle	d_1:	deg
2)	Cycle time	t_0:	s
	(Fill in items 3) and 4) if required.)		
3)	Acceleration time	t_a:	s
4)	Deceleration time	t_d:	s
5)	Stopping time	t_s:	s
6)	Max. rotational speed of the table	v:	deg/s
	(or)	V:	r/s
7)	Positioning accuracy of the work load	±	deg
8)	Weight of one work load	W_A:	kg
9)	Driving radius of the center of gravity of the work	R_1:	mm
10)	Diameter of the table	D_1:	mm
11)	Mass of the table	W_1:	kg
12)	Diameter of the table support	T_1:	mm
13)	Power supply voltage		V

		Prism		Cylinder	
14)	Dimensions of the work load	a:	mm	a:	mm
		b:	mm	b:	mm
		c:	mm	c:	mm
15)	Number of work loads		pcs		

Running pattern

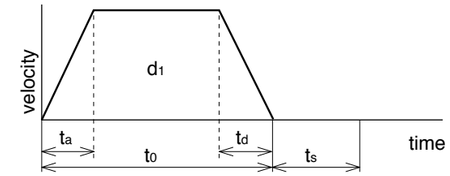

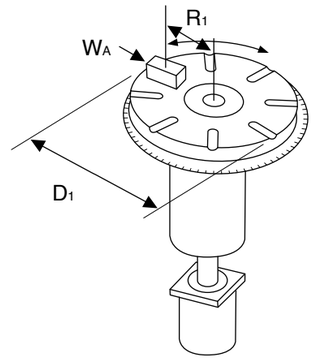

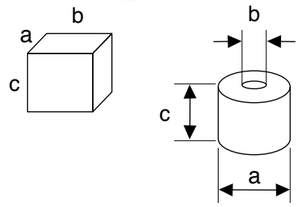

2. Other data (Fill the details on specific mechanism and its configurations in the following blank.)

Company name :
Department/Section :
Name :
Address :
Tel :
Fax :
E-mail address:

Request Sheet for Motor Selection

Request for motor selection Ⅵ : Timing pulley + Turntable drive

1. Driven mechanism and running data

1)	Travel distance of the work load per one cycle	d_1:	deg	
2)	Cycle time	t_0:	s	
	(Fill in items 3) and 4) if required.)			
3)	Acceleration time	t_a:	s	
4)	Deceleration time	t_d:	s	
5)	Stopping time	t_s:	s	
6)	Max. rotational speed of the table	v:	deg/s	
	(or)	V:	r/s	
7)	Positioning accuracy of the work load	±	deg	
8)	Weight of one work load	W_A:	kg	
9)	Driving radius of the center of gravity of the work	R_1:	mm	
10)	Diameter of the table	D_1:	mm	
11)	Mass of the table	W_1:	kg	
12)	Diameter of the table support	T_1:	mm	
13)	Power supply voltage		V	

		(Prism)		(Cylinder)	
14)	Dimension of the work load	a:	mm	a:	mm
		b:	mm	b:	mm
		c:	mm	c:	mm
15)	Number of work loads		pcs		

		Motor side		Turntable side	
16)	Diameter of the pulley	D_2:	mm	D_3:	mm
17)	Weight of the pulley	W_2:	kg	W_3:	kg
	(or item 18) and 19))				
18)	Width of the pulley	L_1:	mm		
19)	Material of the pulley				
20)	Weight of the belt	W_M:	kg		

Running pattern

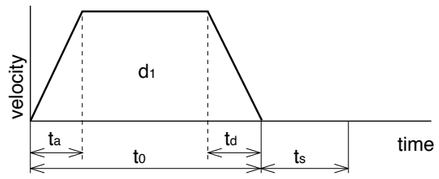

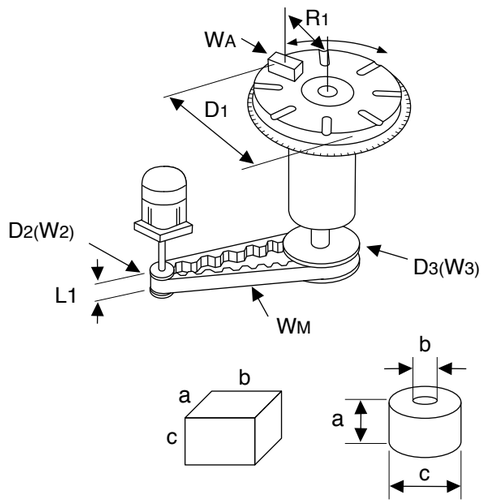

2. Other data (Fill the details on specific mechanism and its configurations in the following blank.)

	Company name :
	Department/Section :
	Name :
	Address :
	Tel :
	Fax :
	E-mail address:

Request Sheet for Motor Selection

Request for motor selection Ⅶ : Roller feed drive

1. Driven mechanism and running data

1)	Travel distance of the work load per one cycle	ℓ_1:	mm
2)	Cycle time	t_0:	s
	(Fill in items 3) and 4) if required.)		
3)	Acceleration time	t_a:	s
4)	Deceleration time	t_d:	s
5)	Stopping time	t_s:	s
6)	Max. velocity	v:	mm/s
7)	External pulling force	F:	N
8)	Positioning accuracy of the work load	±	mm
9)	Number of rollers		pcs
10)	Power supply voltage		V
11)	Diameter of the roller	D_1:	mm
12)	Mass of the roller	W_1:	kg

Running pattern

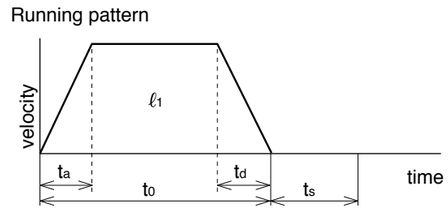

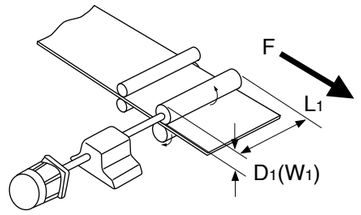

(or item 13) and 14))

13)	Width of the roller	L_1:	mm
14)	Material of the roller		

2. Other data (Fill the details on specific mechanism and its configurations in the following blank.)

	Company name :
	Department/Section :
	Name :
	Address :
	Tel :
	Fax :
	E-mail address:

Request Sheet for Motor Selection

Request for motor selection Ⅷ : Driving with Rack & Pinion

1. Driven mechanism and running data

1)	Travel distance of the work load per one cycle	ℓ_1:	mm
2)	Cycle time	to:	s
	(Fill in items 3) and 4) if required.)		
3)	Acceleration time	ta:	s
4)	Deceleration time	td:	s
5)	Stopping time	ts:	s
6)	Max. velocity	V:	mm/s
7)	External force	F:	N
8)	Positioning accuracy of the work load	±	mm
9)	Total weight of the work load	W_A:	kg
10)	Power supply voltage		V
11)	Diameter of the pinion	D_3:	mm
12)	Mass of the pinion	W_3:	kg
13)	Traveling direction (horizontal, vertical, etc.)		

Running pattern

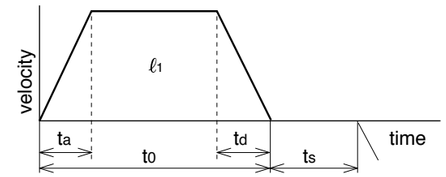

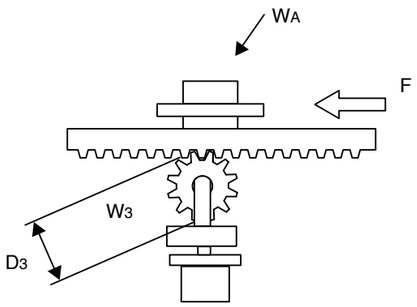

2. Other data (Fill the details on specific mechanism and its configurations in the following blank.)

	Company name :
	Department/Section :
	Name :
	Address :
	Tel :
	Fax :
	E-mail address:

FP7 AFP7PPL02T/L (2 axes) Connection with AFP7PP04T/L (4 axes)

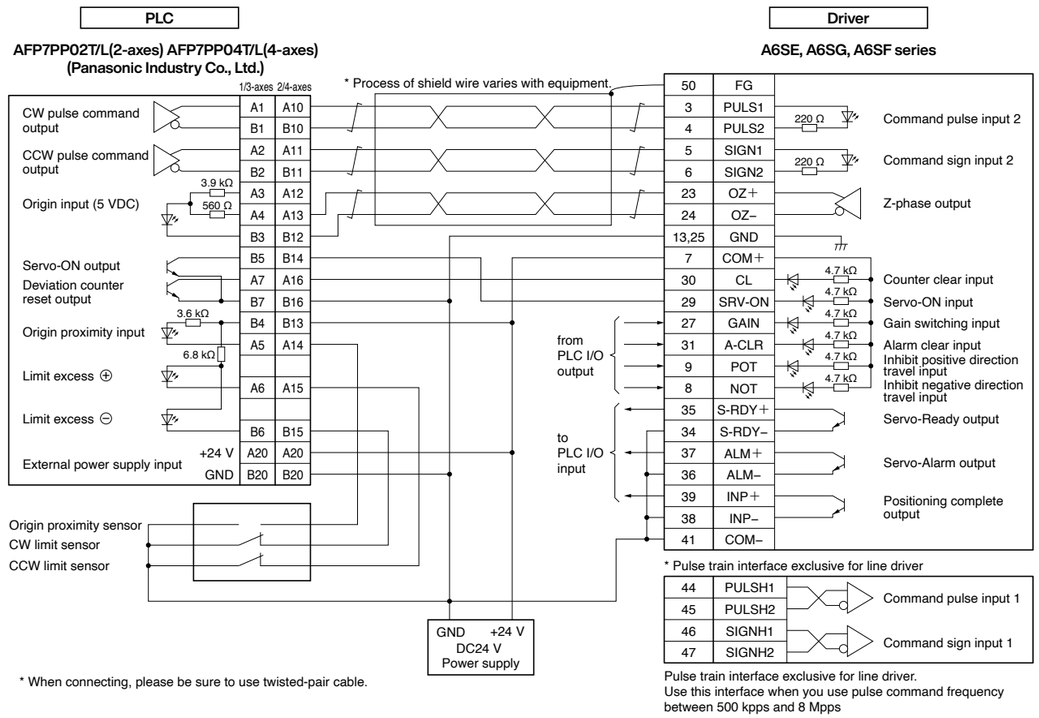

FP0H AFP0HPG01T/L (1 axis) Connection with AFP0HPG02T/L (2 axes)

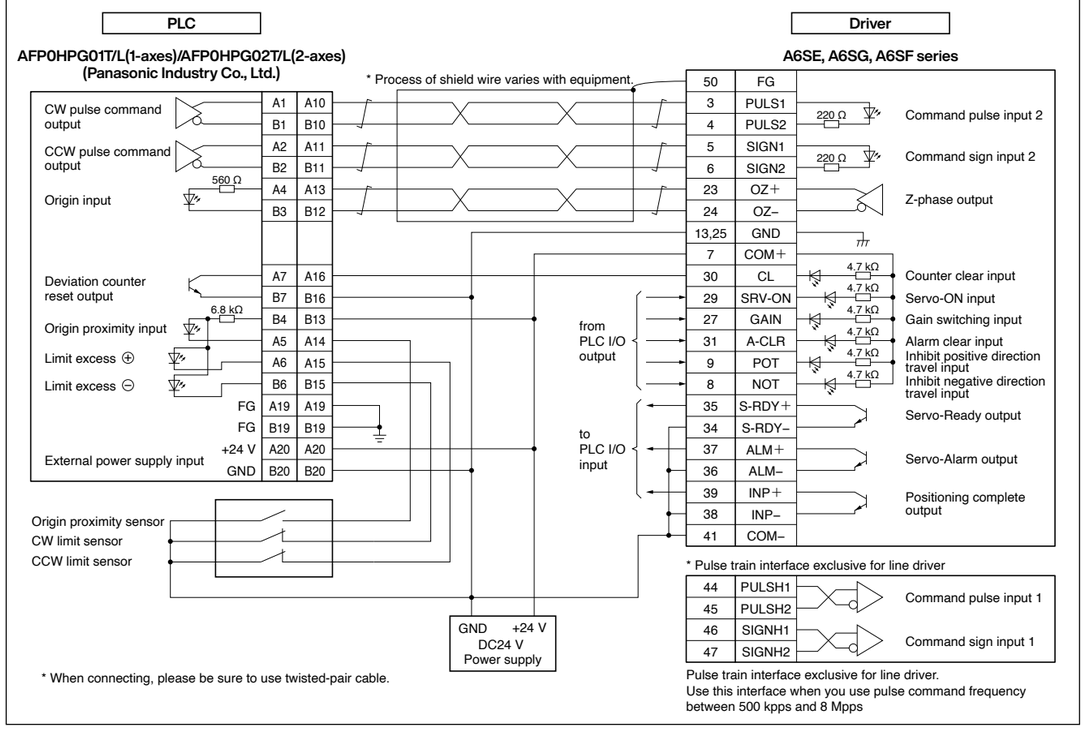

Connection Between Driver and Controller

FP7 AFP7PG02T/L (2 axes) Connection with AFP7PG04T/L (4 axes)

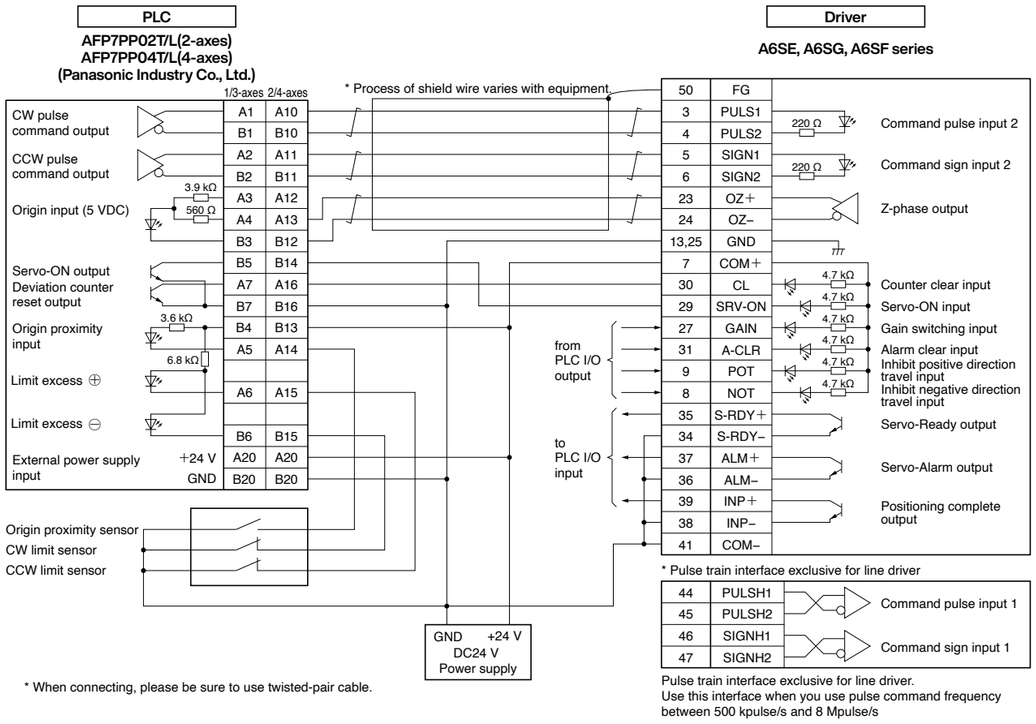

FP0H AFP0HC32T Connection with AFP0HC32ET

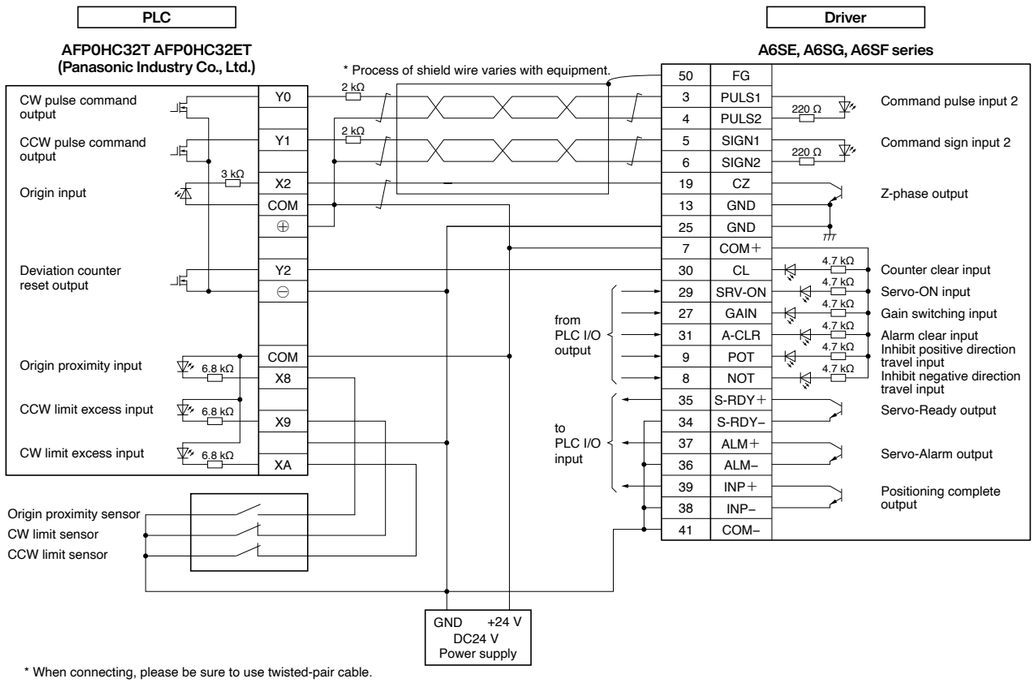

F3YP22-0P/F3YP24-0P/F3YP28-0P Connection with the Yokogawa Electric Corp.

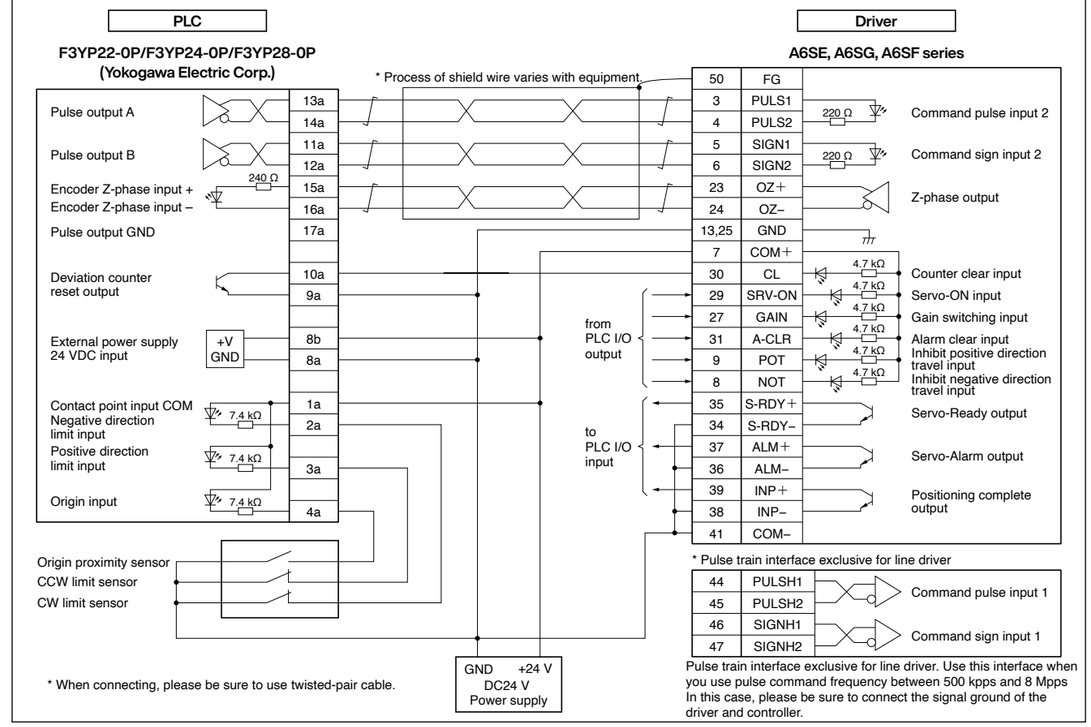

F3NC32-ON/F3NC34-ON Connection with the Yokogawa Electric Corp.

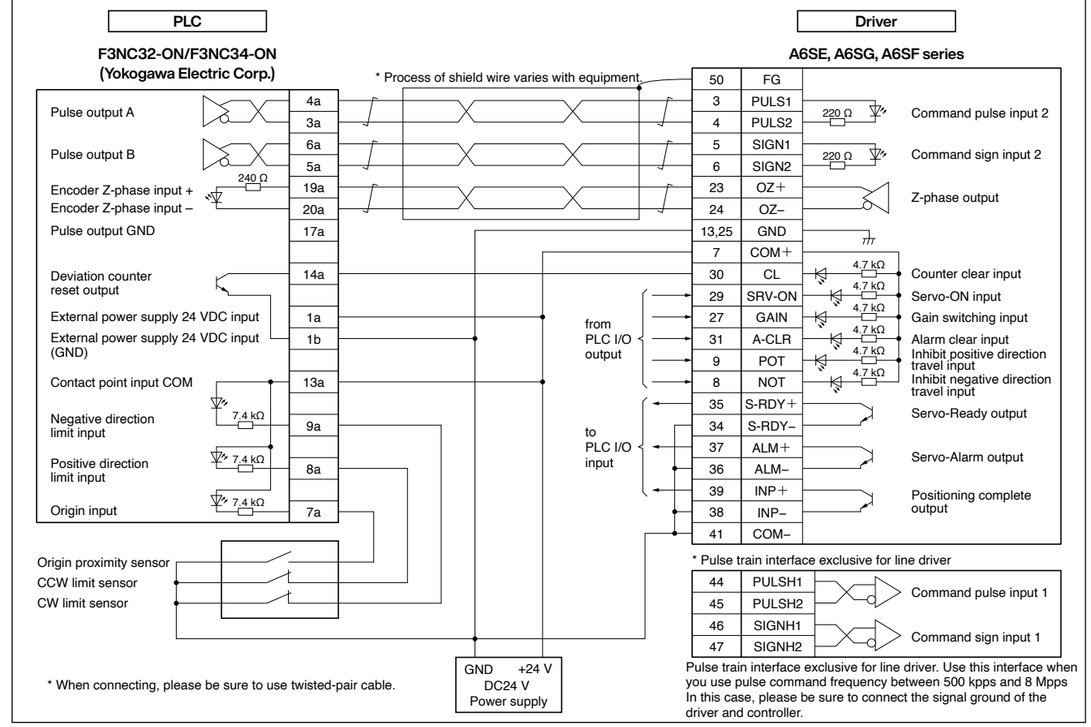

Connection Between Driver and Controller

CJ1W-NC113 Connection with the Omron Corp.

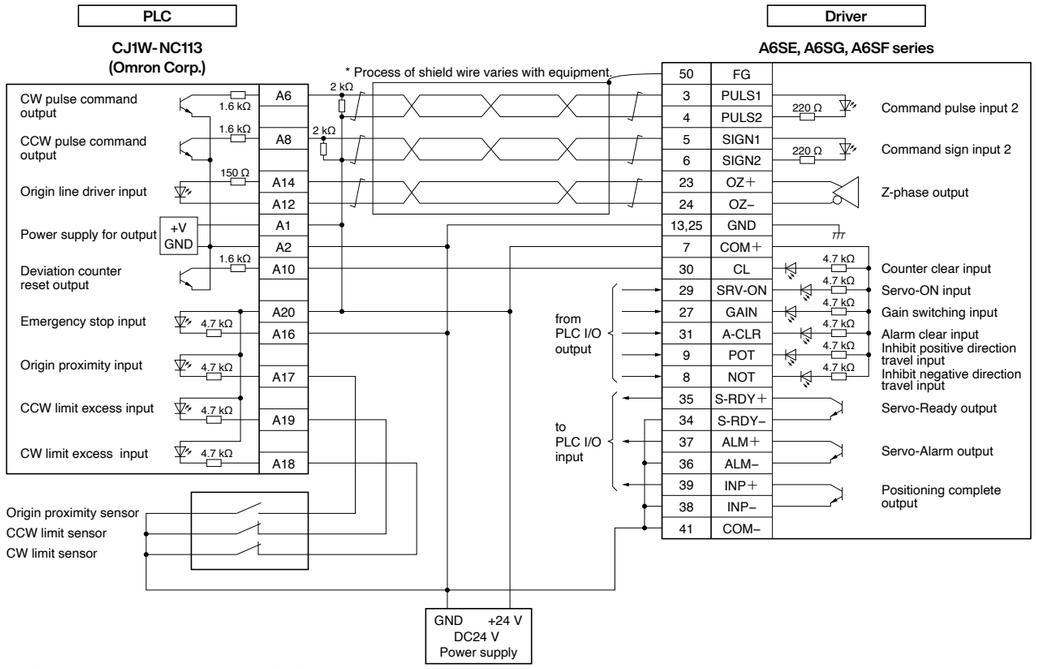

* When connecting, please be sure to use twisted-pair cable.

CJ1W-NC133 Connection with the Omron Corp.

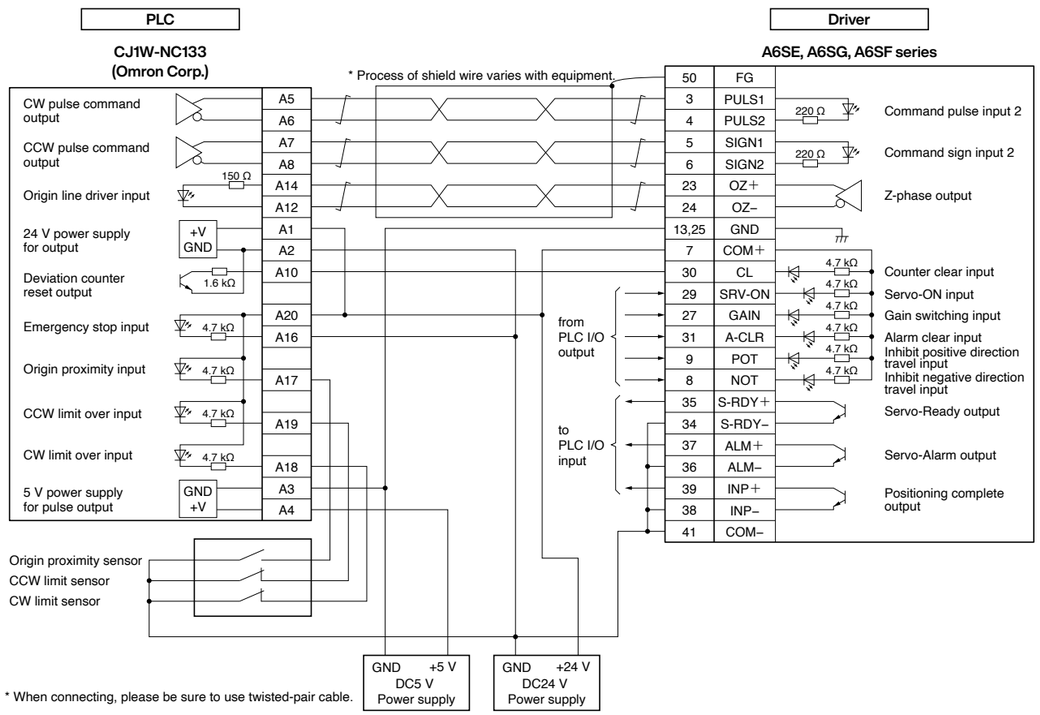

* When connecting, please be sure to use twisted-pair cable.

QD75D1 Connection with the Mitsubishi Electric Corp.

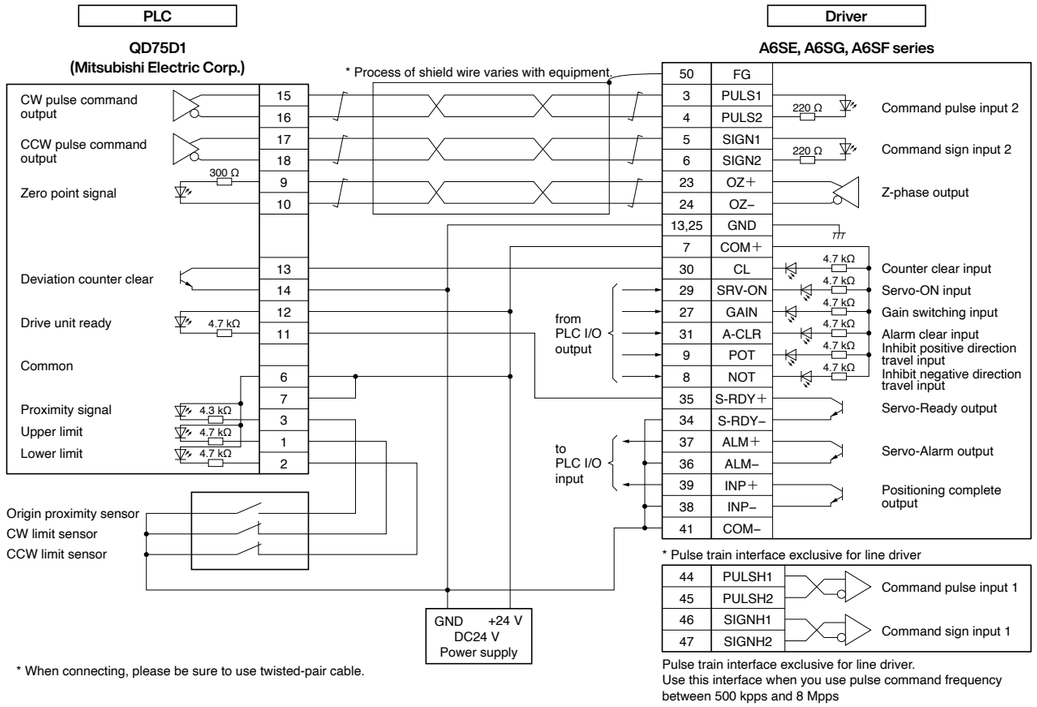

* When connecting, please be sure to use twisted-pair cable.

Pulse train interface exclusive for line driver.
Use this interface when you use pulse command frequency between 500 kpps and 8 Mpps

KV-5000/3000 Connection with the KEYENCE Corp.

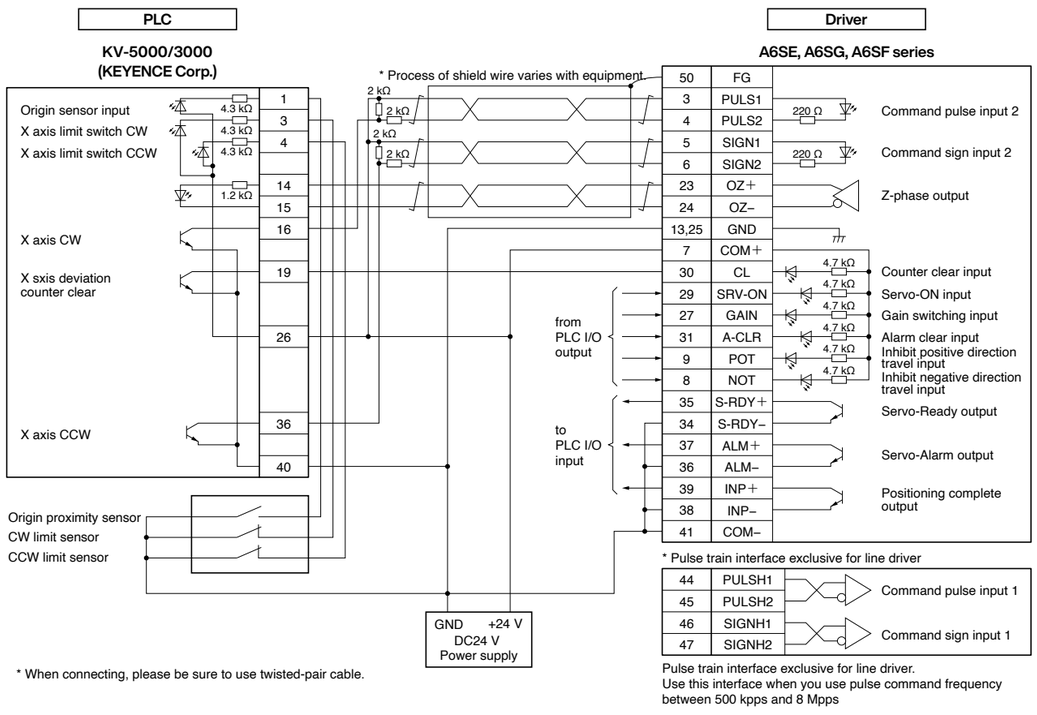

* When connecting, please be sure to use twisted-pair cable.

Pulse train interface exclusive for line driver.
Use this interface when you use pulse command frequency between 500 kpps and 8 Mpps

Replacing Old Model Servo Driver with MINAS A6 series

For easier replacement of old driver (MINAS X/XX/V series) with A6 series, use the interface conversion connector.

〈36-pin → 50-pin〉

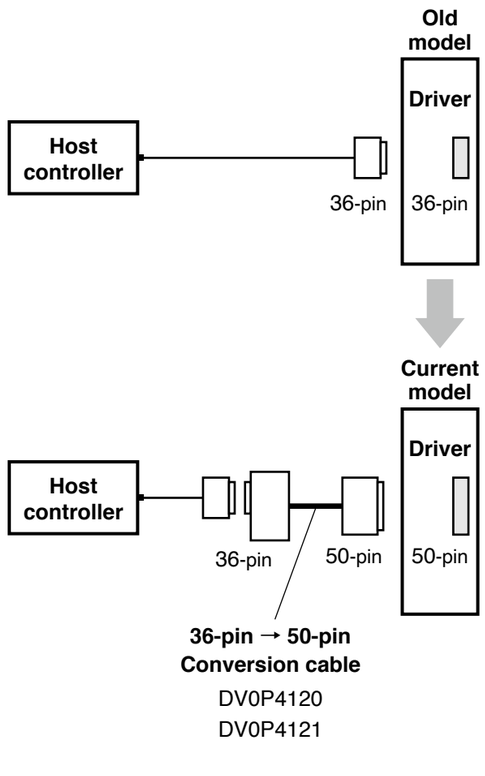

〈50-pin → 50-pin〉

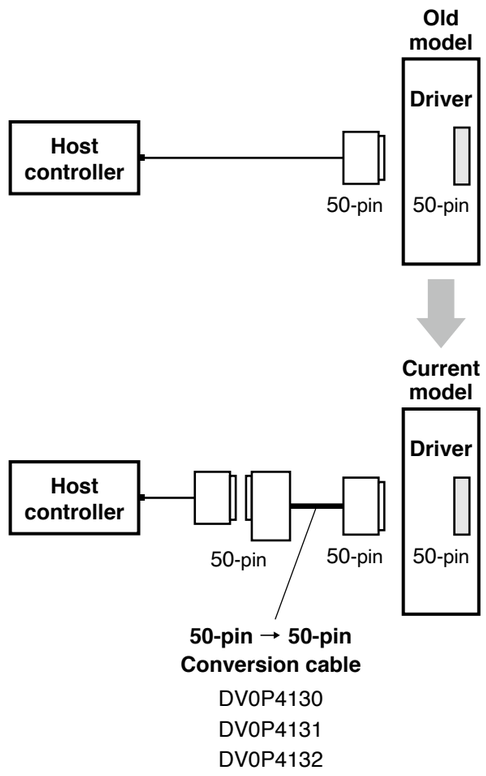

When selecting the cable, refer to the table below because the part number of the cable is specific to the control mode of the old model.

Old model	Control mode	Conversion cable part No.	Conversion wiring table
X series XX series (36-pin)	Position/velocity control	DV0P4120	P.440
	Torque control	DV0P4121	
V series (50-pin)	Position control	DV0P4130	P.441
	Velocity control	DV0P4131	
	Torque control	DV0P4132	P.442

* For external dimensions, refer to P.322.

Conversion Wiring Table

Pin No. on Old Model	DV0P4120			DV0P4121		
	Pin No. on Current Model	Signal Name	Symbol	Pin No. on Current Model	Signal Name	Symbol
1	23	Z-phase output	OZ+	23	Z-phase output	OZ+
2	24	Z-phase output	OZ–	24	Z-phase output	OZ–
3	13	Signal ground	GND	13	Signal ground	GND
4	19	Z-phase output	CZ	19	Z-phase output	CZ
5	4	Command pulse input 2	PULS2	4	Command pulse input 2	PULS2
6	3	Command pulse input 2	PULS1	3	Command pulse input 2	PULS1
7	6	Command pulse sign input 2	SIGN2	6	Command pulse sign input 2	SIGN2
8	5	Command pulse sign input 2	SIGN1	5	Command pulse sign input 2	SIGN1
9	33	Command pulse inhibition input	INH	33	Command pulse inhibition input	INH
10	26	Speed zero clamp input	ZEROSPD	26	Speed zero clamp input	ZEROSPD
11	7	Power supply for control signal (+)	COM+	7	Power supply for control signal (+)	COM+
12	29	Servo-ON input	SRV-ON	29	Servo-ON input	SRV-ON
13	30	Deviation counter clear input	CL	30	Deviation counter clear input	CL
14	14	Speed command input	SPR	NC		
15	15	Signal ground	GND	15	Signal ground	GND
16	43	Speed monitor output	SP	43	Speed monitor output	SP
17	25	Signal ground	GND	25	Signal ground	GND
18	50	Frame ground	FG	50	Frame ground	FG
19	21	A-phase output	OA+	21	A-phase output	OA+
20	22	A-phase output	OA-	22	A-phase output	OA-
21	48	B-phase output	OB+	48	B-phase output	OB+
22	49	B-phase output	OB–	49	B-phase output	OB–
23	NC			NC		
24	NC			NC		
25	39	Positioning complete output Speed arrival output	COIN+ AT-SPEED+	39	Positioning complete output Speed arrival output	COIN+ AT-SPEED+
26	37	Servo-Alarm output	ALM+	37	Servo-Alarm output	ALM+
27	35	Servo-Ready output	S-RDY+	35	Servo-Ready output	S-RDY+
28	34	Positioning complete output (–) Speed arrival output (–)	COIN– AT-SPEED–	34	Positioning complete output (–) Speed arrival output (–)	COIN– AT-SPEED–
	36	Servo-Alarm output (–)	ALM–	36	Servo-Alarm output (–)	ALM–
	38	Servo-Ready output (–)	S-RDY–	38	Servo-Ready output (–)	S-RDY–
	41	Power supply for control signal (–)	COM–	41	Power supply for control signal (–)	COM–
29	8	CW over-travel inhibit input	CWL	8	CW over-travel inhibit input	CWL
30	9	CCW over-travel inhibit input	CCWL	9	CCW over-travel inhibit input	CCWL
31	31	Alarm clear input	A-CLR	31	Alarm clear input	A-CLR
32	32	Control mode switching input	C-MODE	32	Control mode switching input	C-MODE
33	18	CW direction torque limit input	CWTL	18	CW direction torque limit input	CWTL
34	16	CCW direction torque limit input	CCWTL	14	Torque command input	TRQR
35	17	Signal ground	GND	17	Signal ground	GND
36	42	Torque monitor output	IM	42	Torque monitor output	IM

* “NC” is no connect.

Replacing Old Model Servo Driver with MINAS A6 series

Pin No. on Old Model	DV0P4130			DV0P4131		
	Pin No. on Current Model	Signal Name	Symbol	Pin No. on Current Model	Signal Name	Symbol
1	8	CW over-travel inhibit input	CWL	8	CW over-travel inhibit input	CWL
2	9	CCW over-travel inhibit input	CCWL	9	CCW over-travel inhibit input	CCWL
3	3	Command pulse input 2	PULS1	NC		
4	4	Command pulse input 2	PULS2	NC		
5	5	Command pulse sign input 2	SIGN1	NC		
6	6	Command pulse sign input 2	SIGN2	NC		
7	7	Power supply for control signal (+)	COM+	7	Power supply for control signal (+)	COM+
8	NC			NC		
9	NC			NC		
10	NC			NC		
11	11	External brake release signal	BRK-OFF+	11	External brake release signal	BRK-OFF+
12	12	Zero-speed detection output signal	ZSP	12	Zero-speed detection output signal	ZSP
13	13	Torque in-limit signal output	TLC	13	Torque in-limit signal output	TLC
14	NC			14	Speed command input	SPR
15	15	Signal ground	GND	15	Signal ground	GND
16	16	CCW direction torque limit input	CCWTL	16	CCW direction torque limit input	CCWTL
17	17	Signal ground	GND	17	Signal ground	GND
18	18	CW direction torque limit input	CWTL	18	CW direction torque limit input	CWTL
19	19	Z-phase output	CZ	19	Z-phase output	CZ
20	NC			NC		
21	21	A-phase output	OA+	21	A-phase output	OA+
22	22	A-phase output	OA-	22	A-phase output	OA-
23	23	Z-phase output	OZ+	23	Z-phase output	OZ+
24	24	Z-phase output	OZ-	24	Z-phase output	OZ-
25	50	Frame ground	FG	50	Frame ground	FG
26	26	Speed zero clamp input	ZEROSPD	26	Speed zero clamp input	ZEROSPD
27	27	Gain switching input	GAIN	27	Gain switching input	GAIN
28	NC			33	Selection 1 input of internal command speed	INTSPD1
29	29	Servo-ON input	SRV-ON	29	Servo-ON input	SRV-ON
30	30	Deviation counter clear input	CL	NC		
31	31	Alarm clear input	A-CLR	31	Alarm clear input	A-CLR
32	32	Control mode switching input	C-MODE	32	Control mode switching input	C-MODE
33	33	Command pulse inhibition input	INH	NC		
34	NC			NC		
35	35	Servo-Ready output	S-RDY+	35	Servo-Ready output	S-RDY+
36	NC			NC		
37	37	Servo-Alarm output	ALM+	37	Servo-Alarm output	ALM+
38	NC			NC		
39	39	Positioning complete output	COIN+	39	Speed arrival output	AT-SPEED+
40	40	Torque in-limit signal output	TLC	40	Torque in-limit signal output	TLC
41	10	External brake release signal (–)	BRK-OFF–	10	External brake release signal (–)	BRK-OFF–
	34	Positioning complete output (–)	COIN–	34	Speed arrival output (–)	AT-SPEED–
	36	Servo-Alarm output (–)	ALM–	36	Servo-Alarm output (–)	ALM–
	38	Servo-Ready output (–)	S-RDY–	38	Servo-Ready output (–)	S-RDY–
	41	Power supply for control signal (–)	COM–	41	Power supply for control signal (–)	COM–
42	42	Torque monitor output	IM	42	Torque monitor output	IM
43	43	Speed monitor output	SP	43	Speed monitor output	SP
44	25	Signal ground	GND	25	Signal ground	GND
45	25	Signal ground	GND	25	Signal ground	GND
46	25	Signal ground	GND	25	Signal ground	GND
47	NC			NC		
48	48	B-phase output	OB+	48	B-phase output	OB+
49	49	B-phase output	OB–	49	B-phase output	OB–
50	50	Frame ground	FG	50	Frame ground	FG

* “NC” is no connect.

Pin No. on Old Model	DV0P4132		
	Pin No. on Current Model	Signal Name	Symbol
1	8	CW over-travel inhibit input	CWL
2	9	CCW over-travel inhibit input	CCWL
3	NC		
4	NC		
5	NC		
6	NC		
7	7	Power supply for control signal (+)	COM+
8	NC		
9	NC		
10	NC		
11	11	External brake release signal	BRK-OFF+
12	12	Zero-speed detection output signal	ZSP
13	13	Torque in-limit signal output	TLC
14	NC		
15	15	Signal ground	GND
16	16	Torque command input	TRQR
17	17	Signal ground	GND
18	18	CW direction torque limit input	CWTL
19	19	Z-phase output	CZ
20	NC		
21	21	A-phase output	OA+
22	22	A-phase output	OA-
23	23	Z-phase output	OZ+
24	24	Z-phase output	OZ-
25	50	Frame ground	FG
26	26	Speed zero clamp input	ZEROSPD
27	27	Gain switching input	GAIN
28	NC		
29	29	Servo-ON input	SRV-ON
30	NC		
31	31	Alarm clear input	A-CLR
32	32	Control mode switching input	C-MODE
33	NC		
34	NC		
35	35	Servo-Ready output	S-RDY+
36	NC		
37	37	Servo-Alarm output	ALM+
38	NC		
39	39	Speed arrival output	AT-SPEED+
40	40	Torque in-limit signal output	TLC
41	10	External brake release signal (–)	BRK-OFF–
	34	Speed arrival output (–)	AT-SPEED–
	36	Servo-Alarm output (–)	ALM–
	38	Servo-Ready output (–)	S-RDY–
	41	Power supply for control signal (–)	COM–
42	42	Torque monitor output	IM
43	43	Speed monitor output	SP
44	25	Signal ground	GND
45	25	Signal ground	GND
46	25	Signal ground	GND
47	NC		
48	48	B-phase output	OB+
49	49	B-phase output	OB–
50	50	Frame ground	FG

* “NC” is no connect.

Connection Between Driver and Controller

FP7 AFP7PPL02T/L (2 axes) Connection with AFP7PP04T/L (4 axes)

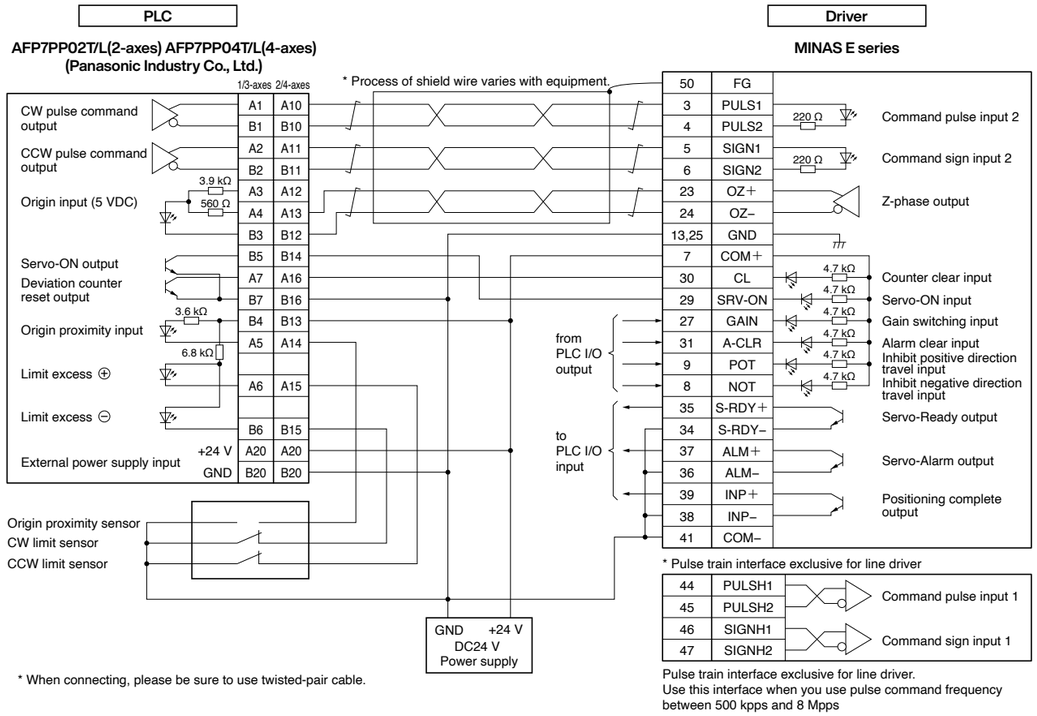

FP7 AFP7PG02T/L (2 axes) Connection with AFP7PG04T/L (4 axes)

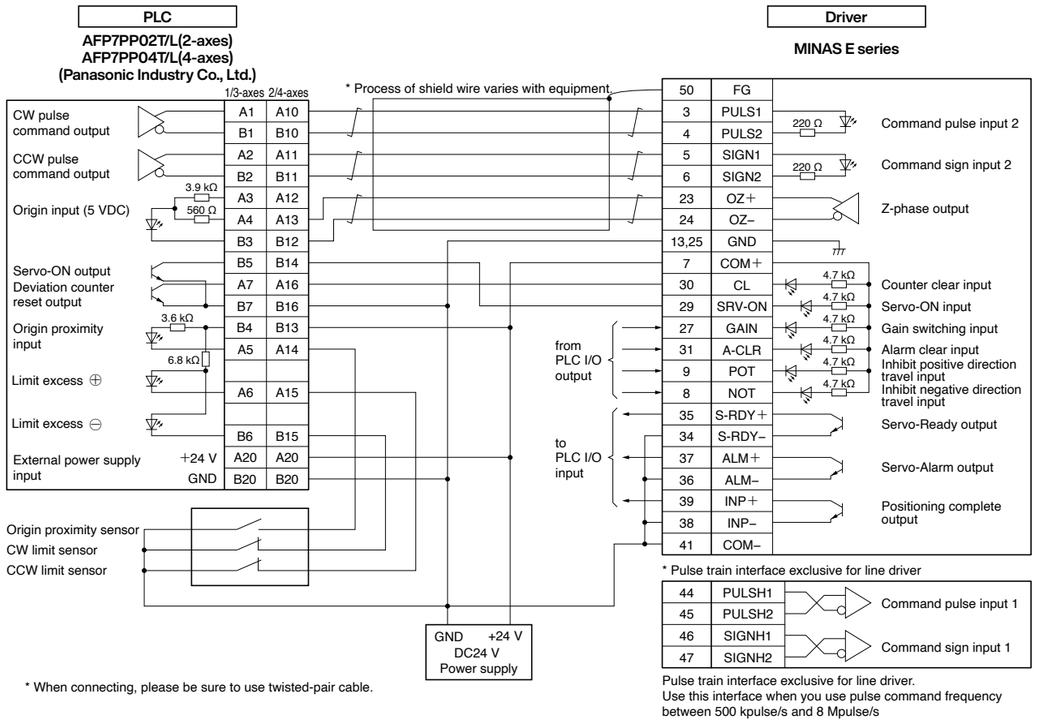

FP0H AFP0HPG01T/L (1 axis) Connection with AFP0HPG02T/L (2 axes)

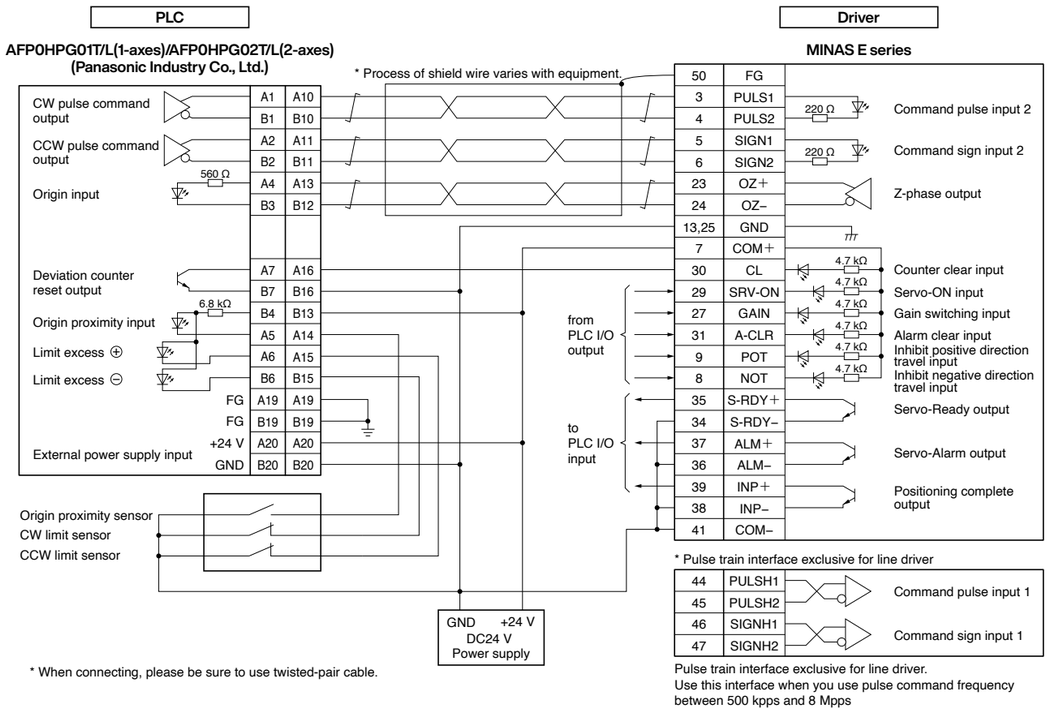

FP0H AFP0HC32T Connection with AFP0HC32ET

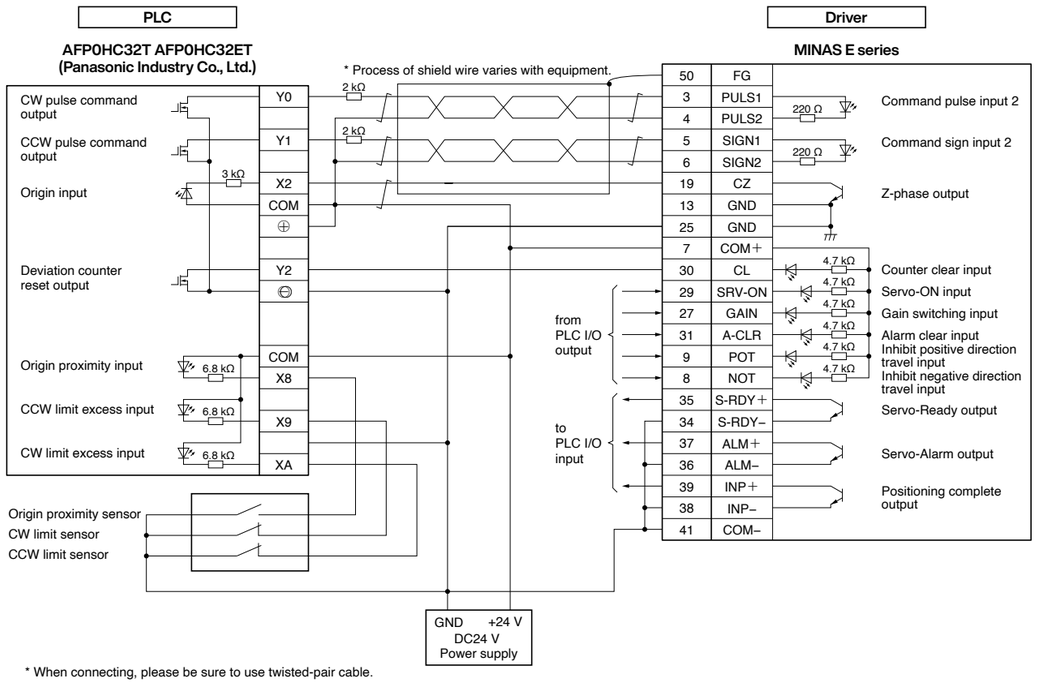

Connection Between Driver and Controller

F3YP22-0P/F3YP24-0P/F3YP28-0P Connection with the Yokogawa Electric Corp.

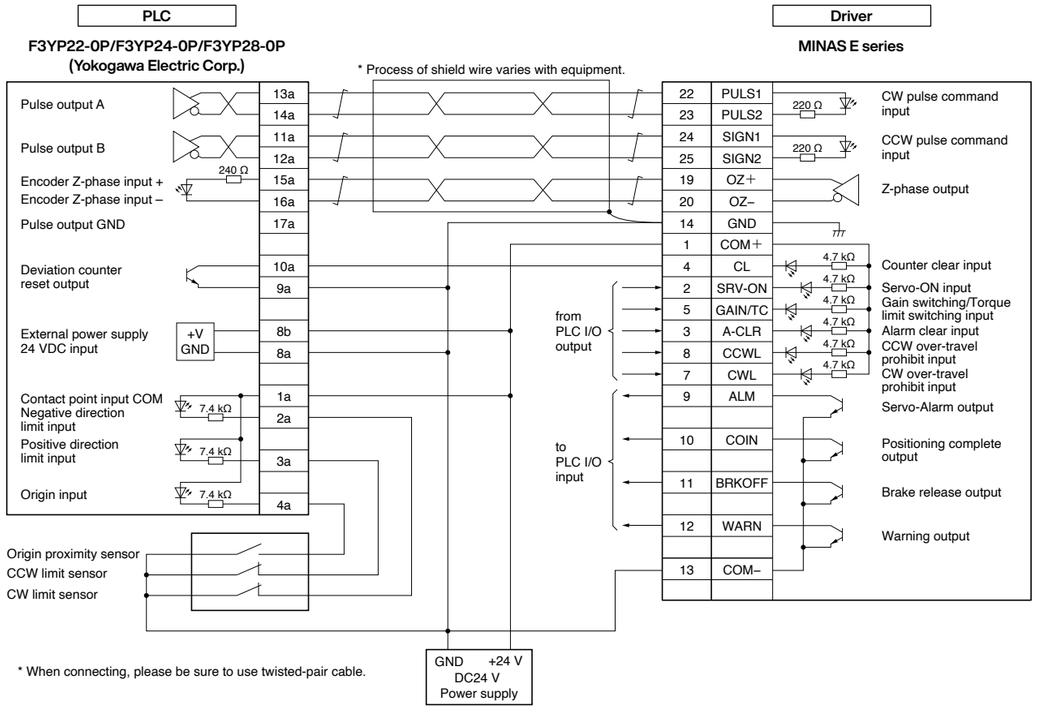

CJ1W-NC113 Connection with the Omron Corp.

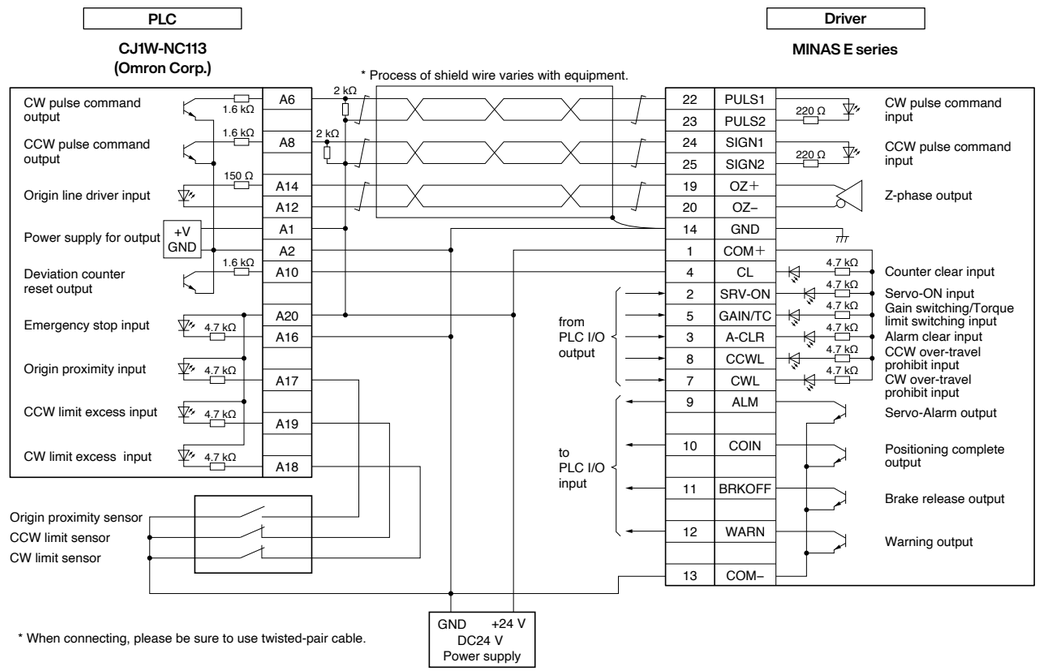

F3NC32-ON/F3NC34-ON Connection with the Yokogawa Electric Corp.

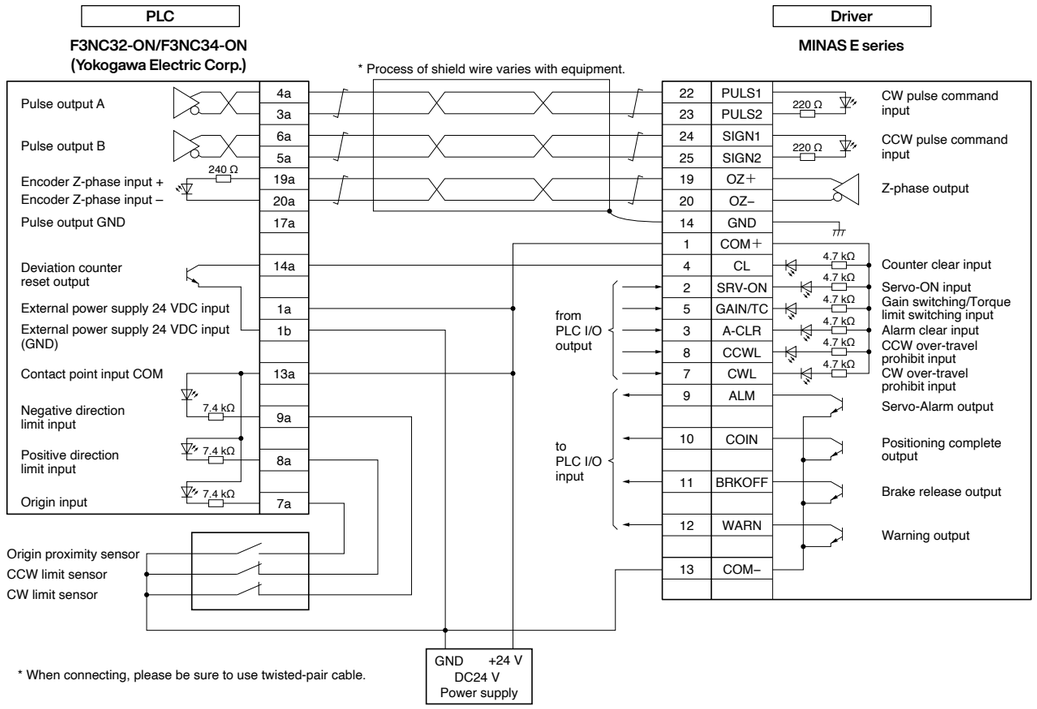

CJ1W-NC133 Connection with the Omron Corp.

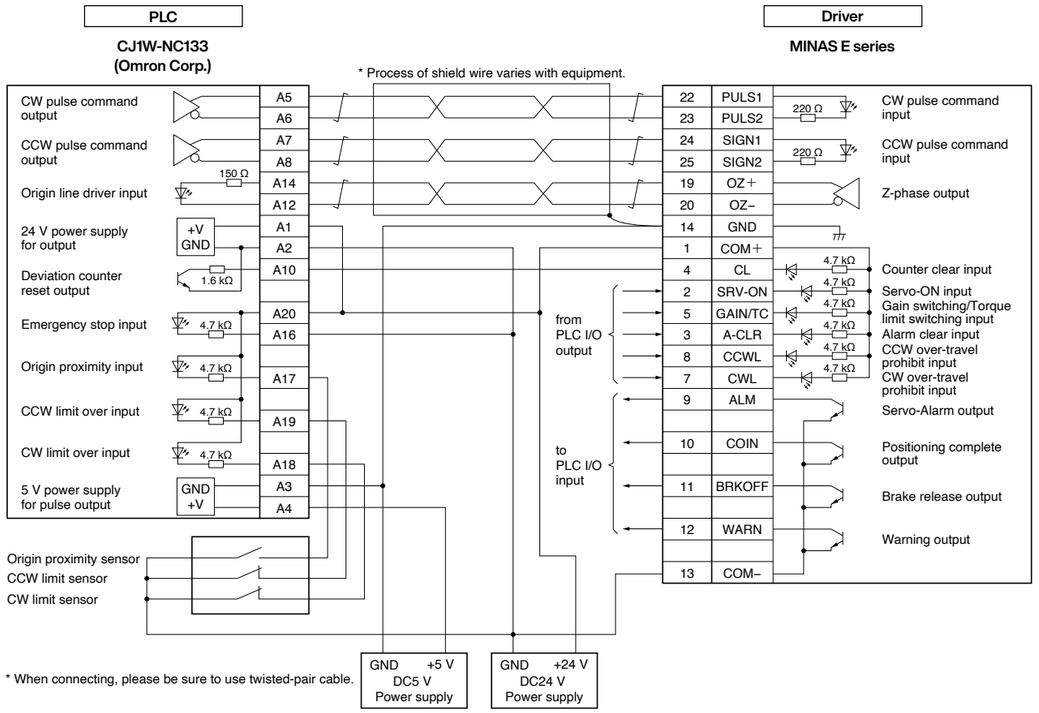

Connection Between Driver and Controller

QD75D1 Connection with the Mitsubishi Electric Corp.

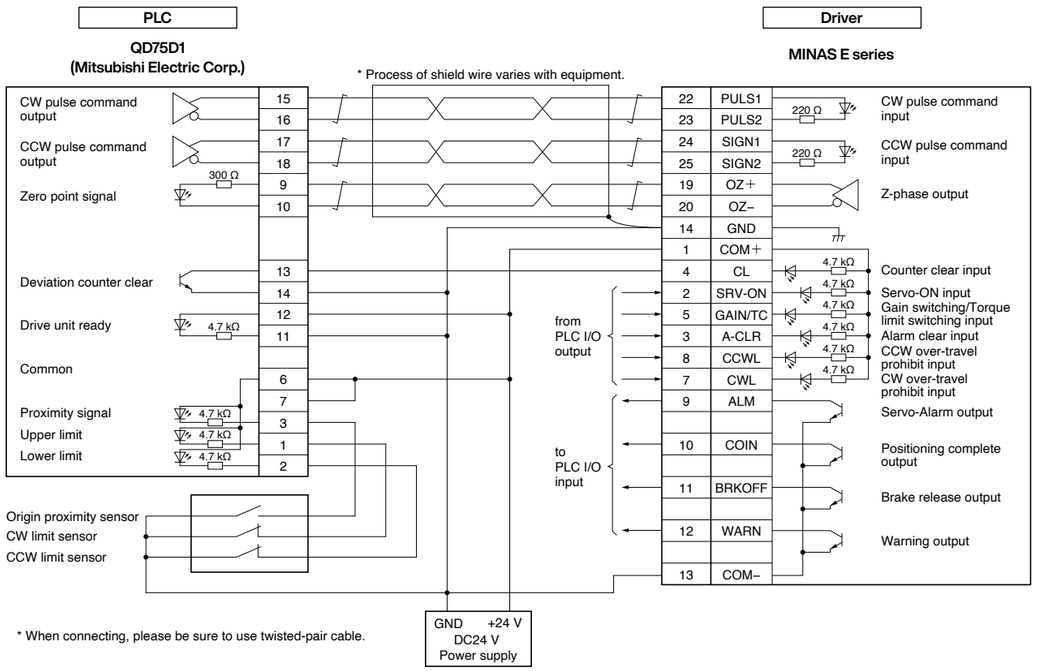

DV0P		
Part No.	**Title**	**Page**
DV0P0770	Connector kit for external peripheral equipment	368,402
DV0P0800	Interface cable	368,403
DV0P1450	Surge absorber (3-phase)	413,416
DV0P1460	Ferrite core	416
DV0P1960	Communication cable	403
DV0P220	Reactor	342,405
DV0P221	Reactor	342
DV0P222	Reactor	342
DV0P223	Reactor	342
DV0P224	Reactor	342
DV0P225	Reactor	342
DV0P227	Reactor	342,405
DV0P228	Reactor	342,405
DV0P2870	Connector kit for power supply connection	401
DV0P2890	External regenerative resistor	404
DV0P2891	External regenerative resistor	404
DV0P2990	Battery for absolute encoder	338
DV0P3410	Noise filter	412
DV0P3670	Connector kit for motor/encoder connection	401
DV0P37300	Cable set (3 m)	400
DV0P3811	DIN rail mounting unit	404
DV0P39200	Cable set (5 m)	400
DV0P4120	Interface conversion cable	439
DV0P4121	Interface conversion cable	439
DV0P4130	Interface conversion cable	439
DV0P4131	Interface conversion cable	439
DV0P4132	Interface conversion cable	439
DV0P4160	Noise filter	416
DV0P4170	Noise filter	412
DV0P4190	Surge absorber (Single phase)	413,416
DV0P4220	Noise Filter	412
DV0P4280	External regenerative resistor: 50 Ω 25 W	343
DV0P4281	External regenerative resistor: 100 Ω 25 W	343
DV0P4282	External regenerative resistor: 25 Ω 50 W	343
DV0P4283	External regenerative resistor: 50 Ω 50 W	343
DV0P4284	External regenerative resistor: 30 Ω100 W	343
DV0P4285	External regenerative resistor: 20 Ω130 W	343
DV0P4290	Connector kit for motor/encoder connection	326
DV0P4310	Connector kit for motor/encoder connection	331
DV0P4320	Connector kit for motor/encoder connection	332
DV0P4330	Connector kit for motor/encoder connection	331
DV0P4340	Connector kit for motor/encoder connection	332
DV0P4350	Interface connector	324
DV0P4360	Interface cable	322
DV0P4420	Console	403
DV0P4430	Battery box	338
DV0P4460	Setup support software “PANATERM” for MINAS series AC servo motor & driver	398
DV0PM20010	Connector Kit: Encoder	324
DV0PM20026	Connector kit: External scale	324
DV0PM20032	Connector for power supply input connection (A-frame to D-frame (Single row type))	325
DV0PM20033	Connector for power supply input connection (A-frame to D-frame (Double row type))	325
DV0PM20034	Connector for motor connection (A-frame to D-frame)	326
DV0PM20035	Connector kit for motor/encoder connection	327
DV0PM20036	Connector kit for motor/encoder connection	331
DV0PM20037	Connector kit for motor/encoder connection	332
DV0PM20038	Connector kit for motor/encoder connection	331
DV0PM20039	Connector kit for motor/encoder connection	332
DV0PM20040	Connector kit for motor/brake connection	337
DV0PM20042	Noise filter	412
DV0PM20043	Noise filter	412
DV0PM20044	Connector for power supply input connection (E-frame)	325
DV0PM20045	Connector for regenerative resistor (E-frame 200 V/400 V common	325
DV0PM20046	Connector for motor connection (E-frame 200 V/400 V common)	326
DV0PM20047	Reactor	342
DV0PM20056	Connector kit for motor/encoder connection	334
DV0PM20057	Connector kit for motor/encoder connection	334
DV0PM20094	Safety by-pass plug	323

DV0P		
Part No.	**Title**	**Page**
DV0PM20100	Mounting bracket for A-frame and B-frame	340
DV0PM20101	Mounting bracket for C-frame and D-frame	341
DV0PM20102	Connector kit: RS485, 232	323
DV0PM20103	Connector kit: Safety	323
DV0PM20107	Connector kit for motor/encoder connection	333
DV0PM20108	Connector kit for motor/encoder connection	333
DV0PM20109	Connector kit for motor/encoder connection	335
DV0PM20110	Connector kit for motor/encoder connection	335
DV0PM20111	Connector kit for motor/encoder connection	333
DV0PM20112	Connector kit for motor/encoder connection	334
DV0PM20113	Connector kit for motor/encoder connection	335
DV0PM20114	Connector kit for motor/encoder connection	336
DV0PM20115	Connector kit for motor/encoder connection	336
DV0PM20116	Connector kit for motor/encoder connection	336
DV0PM24581	Connector kit for motor/encoder connection	328
DV0PM24582	Connector kit for motor/encoder connection	328
DV0PM24583	Connector kit for motor/encoder connection	329
DV0PM24584	Connector kit for motor/encoder connection	330
DV0PM24585	Connector kit for motor/encoder connection	329
DV0PM24586	Connector kit for motor/encoder connection	330
DV0PM24587	Connector kit for motor/encoder connection	329
DV0PM24588	Connector kit for motor/encoder connection	330
DV0PM24589	Connector kit for motor/encoder connection	329
DV0PM24590	Connector kit for motor/encoder connection	330
DV0PM24610	Daisy Chain	345

MADL		
Part No.	**Title**	**Page**
MADLN01NE	A6NE series driver: A-frame	361,362
MADLN01SE	A6SE series driver: A-frame	45,46
MADLN01SG	A6SG series driver: A-frame	45,46
MADLN05NE	A6NE series driver: A-frame	361,362
MADLN05SE	A6SE series driver: A-frame	45,46
MADLN05SG	A6SG series driver: A-frame	45,46
MADLN11NE	A6NE series driver: A-frame	361,362
MADLN11SE	A6SE series driver: A-frame	45,46
MADLN11SG	A6SG series driver: A-frame	45,46
MADLN15NE	A6NE series driver: A-frame	361,362
MADLN15SE	A6SE series driver: A-frame	45,46
MADLN15SG	A6SG series driver: A-frame	45,46
MADLT01NF	A6NF series driver: A-frame	359,360
MADLT01SF	A6SF series driver: A-frame	43,44
MADLT05NF	A6NF series driver: A-frame	359,360
MADLT05SF	A6SF series driver: A-frame	43,44
MADLT11NF	A6NF series driver: A-frame	359,360
MADLT11SF	A6SF series driver: A-frame	43,44
MADLT15NF	A6NF series driver: A-frame	359,360
MADLT15SF	A6SF series driver: A-frame	43,44

MBDL		
Part No.	**Title**	**Page**
MBDLN21NE	A6NE series driver: B-frame	361,362
MBDLN21SE	A6SE series driver: B-frame	45,46
MBDLN21SG	A6SG series driver: B-frame	45,46
MBDLN25NE	A6NE series driver: B-frame	361,362
MBDLN25SE	A6SE series driver: B-frame	45,46
MBDLN25SG	A6SG series driver: B-frame	45,46
MBDLT21NF	A6NF series driver: B-frame	359,360
MBDLT21SF	A6SF series driver: B-frame	43,44
MBDLT25NF	A6NF series driver: B-frame	359,360
MBDLT25SF	A6SF series driver: B-frame	43,44

MCDL		
Part No.	**Title**	**Page**
MCDLN31NE	A6NE series driver: C-frame	361,362
MCDLN31SE	A6SE series driver: C-frame	45,46
MCDLN31SG	A6SG series driver: C-frame	45,46
MCDLN35NE	A6NE series driver: C-frame	361,362
MCDLN35SE	A6SE series driver: C-frame	45,46
MCDLN35SG	A6SG series driver: C-frame	45,46
MCDLT31NF	A6NF series driver: C-frame	359,360
MCDLT31SF	A6SF series driver: C-frame	43,44

Index
(Alphabetical Order)

MCDL

Part No.	Title	Page
MCDLT35NF	A6NF series driver: C-frame	359,360
MCDLT35SF	A6SF series driver: C-frame	43,44

MDDL

Part No.	Title	Page
MDDLN45NE	A6NE series driver: D-frame	361,362
MDDLN45SE	A6SE series driver: D-frame	45,46
MDDLN45SG	A6SG series driver: D-frame	45,46
MDDLN55NE	A6NE series driver: D-frame	361,362
MDDLN55SE	A6SE series driver: D-frame	45,46
MDDLN55SG	A6SG series driver: D-frame	45,46
MDDLT45NF	A6NF series driver: D-frame	359,360
MDDLT45SF	A6SF series driver: D-frame	43,44
MDDLT55NF	A6NF series driver: D-frame	359,360
MDDLT55SF	A6SF series driver: D-frame	43,44

MDMF

Part No.	Title	Page
MDMF102L1C5	MDMF 1.0 kW Motor	102
MDMF102L1C6	MDMF 1.0 kW Motor	102
MDMF102L1C6M	MDMF 1.0 kW Motor	239
MDMF102L1C7	MDMF 1.0 kW Motor	102
MDMF102L1C8	MDMF 1.0 kW Motor	102
MDMF102L1C8M	MDMF 1.0 kW Motor	239
MDMF102L1D5	MDMF 1.0 kW Motor	102
MDMF102L1D6	MDMF 1.0 kW Motor	102
MDMF102L1D6M	MDMF 1.0 kW Motor	239
MDMF102L1D7	MDMF 1.0 kW Motor	102
MDMF102L1D8	MDMF 1.0 kW Motor	102
MDMF102L1D8M	MDMF 1.0 kW Motor	239
MDMF102L1G5	MDMF 1.0 kW Motor	102
MDMF102L1G6	MDMF 1.0 kW Motor	102
MDMF102L1G6M	MDMF 1.0 kW Motor	239
MDMF102L1G7	MDMF 1.0 kW Motor	102
MDMF102L1G8	MDMF 1.0 kW Motor	102
MDMF102L1G8M	MDMF 1.0 kW Motor	239
MDMF102L1H5	MDMF 1.0 kW Motor	102
MDMF102L1H6	MDMF 1.0 kW Motor	102
MDMF102L1H6M	MDMF 1.0 kW Motor	239
MDMF102L1H7	MDMF 1.0 kW Motor	102
MDMF102L1H8	MDMF 1.0 kW Motor	102
MDMF102L1H8M	MDMF 1.0 kW Motor	239
MDMF152L1C5	MDMF 1.5 kW Motor	103
MDMF152L1C6	MDMF 1.5 kW Motor	103
MDMF152L1C6M	MDMF 1.5 kW Motor	240
MDMF152L1C7	MDMF 1.5 kW Motor	103
MDMF152L1C8	MDMF 1.5 kW Motor	103
MDMF152L1C8M	MDMF 1.5 kW Motor	240
MDMF152L1D5	MDMF 1.5 kW Motor	103
MDMF152L1D6	MDMF 1.5 kW Motor	103
MDMF152L1D6M	MDMF 1.5 kW Motor	240
MDMF152L1D7	MDMF 1.5 kW Motor	103
MDMF152L1D8	MDMF 1.5 kW Motor	103
MDMF152L1D8M	MDMF 1.5 kW Motor	240
MDMF152L1G5	MDMF 1.5 kW Motor	103
MDMF152L1G6	MDMF 1.5 kW Motor	103
MDMF152L1G6M	MDMF 1.5 kW Motor	240
MDMF152L1G7	MDMF 1.5 kW Motor	103
MDMF152L1G8	MDMF 1.5 kW Motor	103
MDMF152L1G8M	MDMF 1.5 kW Motor	240
MDMF152L1H5	MDMF 1.5 kW Motor	103
MDMF152L1H6	MDMF 1.5 kW Motor	103
MDMF152L1H6M	MDMF 1.5 kW Motor	240
MDMF152L1H7	MDMF 1.5 kW Motor	103
MDMF152L1H8	MDMF 1.5 kW Motor	103
MDMF152L1H8M	MDMF 1.5 kW Motor	240
MDMF202L1C5	MDMF 2.0 kW Motor	104
MDMF202L1C6	MDMF 2.0 kW Motor	104
MDMF202L1C6M	MDMF 2.0 kW Motor	241
MDMF202L1C7	MDMF 2.0 kW Motor	104
MDMF202L1C8	MDMF 2.0 kW Motor	104
MDMF202L1C8M	MDMF 2.0 kW Motor	241

MDMF

Part No.	Title	Page
MDMF202L1D5	MDMF 2.0 kW Motor	104
MDMF202L1D6	MDMF 2.0 kW Motor	104
MDMF202L1D6M	MDMF 2.0 kW Motor	241
MDMF202L1D7	MDMF 2.0 kW Motor	104
MDMF202L1D8	MDMF 2.0 kW Motor	104
MDMF202L1D8M	MDMF 2.0 kW Motor	241
MDMF202L1G5	MDMF 2.0 kW Motor	104
MDMF202L1G6	MDMF 2.0 kW Motor	104
MDMF202L1G6M	MDMF 2.0 kW Motor	241
MDMF202L1G7	MDMF 2.0 kW Motor	104
MDMF202L1G8	MDMF 2.0 kW Motor	104
MDMF202L1G8M	MDMF 2.0 kW Motor	241
MDMF202L1H5	MDMF 2.0 kW Motor	104
MDMF202L1H6	MDMF 2.0 kW Motor	104
MDMF202L1H6M	MDMF 2.0 kW Motor	241
MDMF202L1H7	MDMF 2.0 kW Motor	104
MDMF202L1H8	MDMF 2.0 kW Motor	104
MDMF202L1H8M	MDMF 2.0 kW Motor	241
MDMF302L1C5	MDMF 3.0 kW Motor	105
MDMF302L1C6	MDMF 3.0 kW Motor	105
MDMF302L1C6M	MDMF 3.0 kW Motor	242
MDMF302L1C7	MDMF 3.0 kW Motor	105
MDMF302L1C8	MDMF 3.0 kW Motor	105
MDMF302L1C8M	MDMF 3.0 kW Motor	242
MDMF302L1D5	MDMF 3.0 kW Motor	105
MDMF302L1D6	MDMF 3.0 kW Motor	105
MDMF302L1D6M	MDMF 3.0 kW Motor	242
MDMF302L1D7	MDMF 3.0 kW Motor	105
MDMF302L1D8	MDMF 3.0 kW Motor	105
MDMF302L1D8M	MDMF 3.0 kW Motor	242
MDMF302L1G5	MDMF 3.0 kW Motor	105
MDMF302L1G6	MDMF 3.0 kW Motor	105
MDMF302L1G6M	MDMF 3.0 kW Motor	242
MDMF302L1G7	MDMF 3.0 kW Motor	105
MDMF302L1G8	MDMF 3.0 kW Motor	105
MDMF302L1G8M	MDMF 3.0 kW Motor	242
MDMF302L1H5	MDMF 3.0 kW Motor	105
MDMF302L1H6	MDMF 3.0 kW Motor	105
MDMF302L1H6M	MDMF 3.0 kW Motor	242
MDMF302L1H7	MDMF 3.0 kW Motor	105
MDMF302L1H8	MDMF 3.0 kW Motor	105
MDMF302L1H8M	MDMF 3.0 kW Motor	242
MDMF402L1C5	MDMF 4.0 kW Motor	106
MDMF402L1C6	MDMF 4.0 kW Motor	106
MDMF402L1C6M	MDMF 4.0 kW Motor	243
MDMF402L1C7	MDMF 4.0 kW Motor	106
MDMF402L1C8	MDMF 4.0 kW Motor	106
MDMF402L1C8M	MDMF 4.0 kW Motor	243
MDMF402L1D5	MDMF 4.0 kW Motor	106
MDMF402L1D6	MDMF 4.0 kW Motor	106
MDMF402L1D6M	MDMF 4.0 kW Motor	243
MDMF402L1D7	MDMF 4.0 kW Motor	106
MDMF402L1D8	MDMF 4.0 kW Motor	106
MDMF402L1D8M	MDMF 4.0 kW Motor	243
MDMF402L1G5	MDMF 4.0 kW Motor	106
MDMF402L1G6	MDMF 4.0 kW Motor	106
MDMF402L1G6M	MDMF 4.0 kW Motor	243
MDMF402L1G7	MDMF 4.0 kW Motor	106
MDMF402L1G8	MDMF 4.0 kW Motor	106
MDMF402L1G8M	MDMF 4.0 kW Motor	243
MDMF402L1H5	MDMF 4.0 kW Motor	106
MDMF402L1H6	MDMF 4.0 kW Motor	106
MDMF402L1H6M	MDMF 4.0 kW Motor	243
MDMF402L1H7	MDMF 4.0 kW Motor	106
MDMF402L1H8	MDMF 4.0 kW Motor	106
MDMF402L1H8M	MDMF 4.0 kW Motor	243
MDMF502L1C5	MDMF 5.0 kW Motor	107
MDMF502L1C6	MDMF 5.0 kW Motor	107
MDMF502L1C6M	MDMF 5.0 kW Motor	244
MDMF502L1C7	MDMF 5.0 kW Motor	107
MDMF502L1C8	MDMF 5.0 kW Motor	107
MDMF502L1C8M	MDMF 5.0 kW Motor	244

MDMF

Part No.	Title	Page
MDMF502L1D5	MDMF 5.0 kW Motor	107
MDMF502L1D6	MDMF 5.0 kW Motor	107
MDMF502L1D6M	MDMF 5.0 kW Motor	244
MDMF502L1D7	MDMF 5.0 kW Motor	107
MDMF502L1D8	MDMF 5.0 kW Motor	107
MDMF502L1D8M	MDMF 5.0 kW Motor	244
MDMF502L1G5	MDMF 5.0 kW Motor	107
MDMF502L1G6	MDMF 5.0 kW Motor	107
MDMF502L1G6M	MDMF 5.0 kW Motor	244
MDMF502L1G7	MDMF 5.0 kW Motor	107
MDMF502L1G8	MDMF 5.0 kW Motor	107
MDMF502L1G8M	MDMF 5.0 kW Motor	244
MDMF502L1H5	MDMF 5.0 kW Motor	107
MDMF502L1H6	MDMF 5.0 kW Motor	107
MDMF502L1H6M	MDMF 5.0 kW Motor	244
MDMF502L1H7	MDMF 5.0 kW Motor	107
MDMF502L1H8	MDMF 5.0 kW Motor	107
MDMF502L1H8M	MDMF 5.0 kW Motor	244
MDMF752L1C5	MDMF 7.5kW Motor	108
MDMF752L1C6	MDMF 7.5kW Motor	108
MDMF752L1C6M	MDMF 7.5kW Motor	245
MDMF752L1D5	MDMF 7.5kW Motor	108
MDMF752L1D6	MDMF 7.5kW Motor	108
MDMF752L1D6M	MDMF 7.5kW Motor	245
MDMF752L1G5	MDMF 7.5kW Motor	108
MDMF752L1G6	MDMF 7.5kW Motor	108
MDMF752L1G6M	MDMF 7.5kW Motor	245
MDMF752L1H5	MDMF 7.5kW Motor	108
MDMF752L1H6	MDMF 7.5kW Motor	108
MDMF752L1H6M	MDMF 7.5kW Motor	245
MDMFC12L1C5	MDMF 11.0kW Motor	109
MDMFC12L1C6	MDMF 11.0kW Motor	109
MDMFC12L1D5	MDMF 11.0kW Motor	109
MDMFC12L1D6	MDMF 11.0kW Motor	109
MDMFC12L1G5	MDMF 11.0kW Motor	109
MDMFC12L1G6	MDMF 11.0kW Motor	109
MDMFC12L1H5	MDMF 11.0kW Motor	109
MDMFC12L1H6	MDMF 11.0kW Motor	109
MDMFC52L1C5	MDMF 15.0 kW Motor	110
MDMFC52L1C6	MDMF 15.0 kW Motor	110
MDMFC52L1D5	MDMF 15.0 kW Motor	110
MDMFC52L1D6	MDMF 15.0 kW Motor	110
MDMFC52L1G5	MDMF 15.0 kW Motor	110
MDMFC52L1G6	MDMF 15.0 kW Motor	110
MDMFC52L1H5	MDMF 15.0 kW Motor	110
MDMFC52L1H6	MDMF 15.0 kW Motor	110
MDMFD22L1C5	MDMF 22.0 kW Motor	111
MDMFD22L1C6	MDMF 22.0 kW Motor	111
MDMFD22L1D5	MDMF 22.0 kW Motor	111
MDMFD22L1D6	MDMF 22.0 kW Motor	111
MDMFD22L1G5	MDMF 22.0 kW Motor	111
MDMFD22L1G6	MDMF 22.0 kW Motor	111
MDMFD22L1H5	MDMF 22.0 kW Motor	111
MDMFD22L1H6	MDMF 22.0 kW Motor	111

MEDL

Part No.	Title	Page
MEDLN83NE	A6 NE series driver: E-frame	361,362
MEDLN83SE	A6 SE series driver: E-frame	45,46
MEDLN83SG	A6 SG series driver: E-frame	45,46
MEDLN93NE	A6 NE series driver: E-frame	361,362
MEDLN93SE	A6 SE series driver: E-frame	45,46
MEDLN93SG	A6 SG series driver: E-frame	45,46
MEDLT83NF	A6 NF series driver: E-frame	359,360
MEDLT83SF	A6 SF series driver: E-frame	43,44
MEDLT93NF	A6 NF series driver: E-frame	359,360
MEDLT93SF	A6 SF series driver: E-frame	43,44

MFDL

Part No.	Title	Page
MFDLNA3NE	A6 NE series driver: F-frame	361,362
MFDLNA3SE	A6 SE series driver: F-frame	45,46

MFDL

Part No.	Title	Page
MFDLNA3SG	A6 SG series driver: F-frame	45,46
MFDLNB3NE	A6 NE series driver: F-frame	361,362
MFDLNB3SE	A6 SE series driver: F-frame	45,46
MFDLNB3SG	A6 SG series driver: F-frame	45,46
MFDLTA3NF	A6 NF series driver: F-frame	359,360
MFDLTA3SF	A6 SF series driver: F-frame	43,44
MFDLTB3NF	A6 NF series driver: F-frame	359,360
MFDLTB3SF	A6 SF series driver: F-frame	43,44

MFECA

Part No.	Title	Page
MFECA0030EAD	Encoder cable (without battery box)	309
MFECA0030EAE	Encoder cable (with battery box)	309
MFECA0030EAM	Encoder cable (without battery box)	400
MFECA0030EPD	Encoder cable (without battery box)	311
MFECA0030EPE	Encoder cable (with battery box)	311
MFECA0030ESD	Encoder cable (without battery box)	311
MFECA0030ESE	Encoder cable (with battery box)	312
MFECA0030ETD	Encoder cable (without battery box)	312
MFECA0030ETE	Encoder cable (with battery box)	312
MFECA0030MJD	Encoder cable (without battery box)	310
MFECA0030MJE	Encoder cable (with battery box)	310
MFECA0030MKD	Encoder cable (without battery box)	310
MFECA0030MKE	Encoder cable (with battery box)	310
MFECA0030TJD	Encoder cable (without battery box)	310
MFECA0030TJE	Encoder cable (with battery box)	310
MFECA0030TKD	Encoder cable (without battery box)	310
MFECA0030TKE	Encoder cable (with battery box)	310
MFECA0050EAD	Encoder cable (without battery box)	309
MFECA0050EAE	Encoder cable (with battery box)	309
MFECA0050EAM	Encoder cable (without battery box)	400
MFECA0050EPD	Encoder cable (without battery box)	311
MFECA0050EPE	Encoder cable (with battery box)	311
MFECA0050ESD	Encoder cable (without battery box)	311
MFECA0050ESE	Encoder cable (with battery box)	312
MFECA0050ETD	Encoder cable (without battery box)	312
MFECA0050ETE	Encoder cable (with battery box)	312
MFECA0050MJD	Encoder cable (without battery box)	310
MFECA0050MJE	Encoder cable (with battery box)	310
MFECA0050MKD	Encoder cable (without battery box)	310
MFECA0050MKE	Encoder cable (with battery box)	310
MFECA0050TJD	Encoder cable (without battery box)	310
MFECA0050TJE	Encoder cable (with battery box)	310
MFECA0050TKD	Encoder cable (without battery box)	310
MFECA0050TKE	Encoder cable (with battery box)	310
MFECA0100EAD	Encoder cable (without battery box)	309
MFECA0100EAE	Encoder cable (with battery box)	309
MFECA0100EAM	Encoder cable (without battery box)	400
MFECA0100EPD	Encoder cable (without battery box)	311
MFECA0100EPE	Encoder cable (without battery box)	311
MFECA0100ESD	Encoder cable (without battery box)	311
MFECA0100ESE	Encoder cable (with battery box)	312
MFECA0100ETD	Encoder cable (without battery box)	312
MFECA0100ETE	Encoder cable (with battery box)	312
MFECA0100MJD	Encoder cable (without battery box)	310
MFECA0100MJE	Encoder cable (with battery box)	310
MFECA0100MKD	Encoder cable (without battery box)	310
MFECA0100MKE	Encoder cable (with battery box)	310
MFECA0100TJD	Encoder cable (without battery box)	310
MFECA0100TJE	Encoder cable (with battery box)	310
MFECA0100TKD	Encoder cable (without battery box)	310
MFECA0100TKE	Encoder cable (with battery box)	310
MFECA0200EAD	Encoder cable (without battery box)	309
MFECA0200EAE	Encoder cable (with battery box)	309
MFECA0200EAM	Encoder cable (without battery box)	400
MFECA0200EPD	Encoder cable (without battery box)	311
MFECA0200EPE	Encoder cable (without battery box)	311
MFECA0200ESD	Encoder cable (without battery box)	311
MFECA0200ESE	Encoder cable (with battery box)	312
MFECA0200ETD	Encoder cable (without battery box)	312
MFECA0200ETE	Encoder cable (with battery box)	312
MFECA0200MJD	Encoder cable (without battery box)	310

Index
(Alphabetical Order)

MFECA

Part No.	Title	Page
MFECA0200MJE	Encoder cable (with battery box)	310
MFECA0200MKD	Encoder cable (without battery box)	310
MFECA0200MKE	Encoder cable (with battery box)	310
MFECA0200TJD	Encoder cable (without battery box)	310
MFECA0200TJE	Encoder cable (with battery box)	310
MFECA0200TKD	Encoder cable (without battery box)	310
MFECA0200TKE	Encoder cable (with battery box)	310

MFMCA

Part No.	Title	Page
MFMCA0030AEB	Motor cable	400
MFMCA0030EED	Motor cable (without Brake)	313
MFMCA0030NJD	Motor cable (without Brake)	313
MFMCA0030NKD	Motor cable (without Brake)	313
MFMCA0030RJD	Motor cable (without Brake)	313
MFMCA0030RKD	Motor cable (without Brake)	313
MFMCA0030UFD	Motor cable (without Brake)	314
MFMCA0030UGD	Motor cable (without Brake)	314
MFMCA0030VFD	Motor cable (with Brake)	317
MFMCA0030VGD	Motor cable (with Brake)	317
MFMCA0030WFD	Motor cable (without Brake)	314
MFMCA0030WGD	Motor cable (without Brake)	314
MFMCA0030XFD	Motor cable (with Brake)	317
MFMCA0030XGD	Motor cable (with Brake)	317
MFMCA0032FCD	Motor cable (with Brake)	318
MFMCA0032FUD	Motor cable (with Brake)	318
MFMCA0033ECT	Motor cable (without Brake)	316
MFMCA0033EUT	Motor cable (without Brake)	316
MFMCA0033FCT	Motor cable (with Brake)	320
MFMCA0033FUT	Motor cable (with Brake)	320
MFMCA0037UFD	Motor cable (without Brake)	313
MFMCA0037UGD	Motor cable (without Brake)	313
MFMCA0037VFD	Motor cable (with Brake)	317
MFMCA0037VGD	Motor cable (with Brake)	317
MFMCA0050AEB	Motor cable	400
MFMCA0050EED	Motor cable (without Brake)	313
MFMCA0050NJD	Motor cable (without Brake)	313
MFMCA0050NKD	Motor cable (without Brake)	313
MFMCA0050RJD	Motor cable (without Brake)	313
MFMCA0050RKD	Motor cable (without Brake)	313
MFMCA0050UFD	Motor cable (without Brake)	314
MFMCA0050UGD	Motor cable (without Brake)	314
MFMCA0050VFD	Motor cable (with Brake)	317
MFMCA0050VGD	Motor cable (with Brake)	317
MFMCA0050WFD	Motor cable (without Brake)	314
MFMCA0050WGD	Motor cable (without Brake)	314
MFMCA0050XFD	Motor cable (with Brake)	317
MFMCA0050XGD	Motor cable (with Brake)	317
MFMCA0052FCD	Motor cable (with Brake)	318
MFMCA0052FUD	Motor cable (with Brake)	318
MFMCA0053ECT	Motor cable (without Brake)	316
MFMCA0053EUT	Motor cable (without Brake)	316
MFMCA0053FCT	Motor cable (with Brake)	320
MFMCA0053FUT	Motor cable (with Brake)	320
MFMCA0057UFD	Motor cable (without Brake)	313
MFMCA0057UGD	Motor cable (without Brake)	313
MFMCA0057VFD	Motor cable (with Brake)	317
MFMCA0057VGD	Motor cable (with Brake)	317
MFMCA0100AEB	Motor cable	400
MFMCA0100EED	Motor cable (without Brake)	313
MFMCA0100NJD	Motor cable (without Brake)	313
MFMCA0100NKD	Motor cable (without Brake)	313
MFMCA0100RJD	Motor cable (without Brake)	313
MFMCA0100RKD	Motor cable (without Brake)	313
MFMCA0100UFD	Motor cable (without Brake)	314
MFMCA0100UGD	Motor cable (without Brake)	314
MFMCA0100VFD	Motor cable (with Brake)	317
MFMCA0100VGD	Motor cable (with Brake)	317
MFMCA0100WFD	Motor cable (without Brake)	314
MFMCA0100WGD	Motor cable (without Brake)	314
MFMCA0100XFD	Motor cable (with Brake)	317
MFMCA0100XGD	Motor cable (with Brake)	317

MFMCA

Part No.	Title	Page
MFMCA0102FCD	Motor cable (with Brake)	318
MFMCA0102FUD	Motor cable (with Brake)	318
MFMCA0103ECT	Motor cable (without Brake)	316
MFMCA0103EUT	Motor cable (without Brake)	316
MFMCA0103FCT	Motor cable (with Brake)	320
MFMCA0103FUT	Motor cable (with Brake)	320
MFMCA0107UFD	Motor cable (without Brake)	313
MFMCA0107UGD	Motor cable (without Brake)	313
MFMCA0107VFD	Motor cable (with Brake)	317
MFMCA0107VGD	Motor cable (with Brake)	317
MFMCA0200AEB	Motor cable	400
MFMCA0200EED	Motor cable (without Brake)	313
MFMCA0200NJD	Motor cable (without Brake)	313
MFMCA0200NKD	Motor cable (without Brake)	313
MFMCA0200RJD	Motor cable (without Brake)	313
MFMCA0200RKD	Motor cable (without Brake)	313
MFMCA0200UFD	Motor cable (without Brake)	314
MFMCA0200UGD	Motor cable (without Brake)	314
MFMCA0200VFD	Motor cable (with Brake)	317
MFMCA0200VGD	Motor cable (with Brake)	317
MFMCA0200WFD	Motor cable (without Brake)	314
MFMCA0200WGD	Motor cable (without Brake)	314
MFMCA0200XFD	Motor cable (with Brake)	317
MFMCA0200XGD	Motor cable (with Brake)	317
MFMCA0202FCD	Motor cable (with Brake)	318
MFMCA0202FUD	Motor cable (with Brake)	318
MFMCA0203ECT	Motor cable (without Brake)	316
MFMCA0203EUT	Motor cable (without Brake)	316
MFMCA0203FCT	Motor cable (with Brake)	320
MFMCA0203FUT	Motor cable (with Brake)	320
MFMCA0207UFD	Motor cable (without Brake)	313
MFMCA0207UGD	Motor cable (without Brake)	313
MFMCA0207VFD	Motor cable (with Brake)	317
MFMCA0207VGD	Motor cable (with Brake)	317

MFMCB

Part No.	Title	Page
MFMCB0030GET	Brake cable	321,400
MFMCB0030PJT	Brake cable	321
MFMCB0030PKT	Brake cable	321
MFMCB0030SJT	Brake cable	321
MFMCB0030SKT	Brake cable	321
MFMCB0050GET	Brake cable	321,400
MFMCB0050PJT	Brake cable	321
MFMCB0050PKT	Brake cable	321
MFMCB0050SJT	Brake cable	321
MFMCB0050SKT	Brake cable	321
MFMCB0100GET	Brake cable	321,400
MFMCB0100PJT	Brake cable	321
MFMCB0100PKT	Brake cable	321
MFMCB0100SJT	Brake cable	321
MFMCB0100SKT	Brake cable	321
MFMCB0200GET	Brake cable	321,400
MFMCB0200PJT	Brake cable	321
MFMCB0200PKT	Brake cable	321
MFMCB0200SJT	Brake cable	321
MFMCB0200SKT	Brake cable	321

MFMCD

Part No.	Title	Page
MFMCD0032ECD	Motor cable (without brake)	314
MFMCD0032EUD	Motor cable (without brake)	314
MFMCD0033FCT	Motor cable (with brake)	319
MFMCD0033FUT	Motor cable (with brake)	319
MFMCD0052ECD	Motor cable (without brake)	314
MFMCD0052EUD	Motor cable (without brake)	314
MFMCD0053FCT	Motor cable (with brake)	319
MFMCD0053FUT	Motor cable (with brake)	319
MFMCD0102ECD	Motor cable (without brake)	314
MFMCD0102EUD	Motor cable (without brake)	314
MFMCD0103FCT	Motor cable (with brake)	319
MFMCD0103FUT	Motor cable (with brake)	319

MFMCD

Part No.	Title	Page
MFMCD0202ECD	Motor cable (without brake)	314
MFMCD0202EUD	Motor cable (without brake)	314
MFMCD0203FCT	Motor cable (with brake)	319
MFMCD0203FUT	Motor cable (with brake)	319

MFMCE

Part No.	Title	Page
MFMCE0032ECD	Motor cable (without brake)	315
MFMCE0032EUD	Motor cable (without brake)	315
MFMCE0032FCD	Motor cable (with brake)	319
MFMCE0032FUD	Motor cable (with Brake)	318
MFMCE0033ECT	Motor cable (without brake)	316
MFMCE0033EUT	Motor cable (without brake)	315
MFMCE0052ECD	Motor cable (with brake)	315
MFMCE0052EUD	Motor cable (with Brake)	315
MFMCE0052FCD	Motor cable (without brake)	319
MFMCE0052FUD	Motor cable (without brake)	318
MFMCE0053ECT	Motor cable (with brake)	316
MFMCE0053EUT	Motor cable (with Brake)	315
MFMCE0102ECD	Motor cable (without brake)	315
MFMCE0102EUD	Motor cable (without brake)	315
MFMCE0102FCD	Motor cable (with brake)	319
MFMCE0102FUD	Motor cable (with Brake)	318
MFMCE0103ECT	Motor cable (without brake)	316
MFMCE0103EUT	Motor cable (without brake)	315
MFMCE0202ECD	Motor cable (with brake)	315
MFMCE0202EUD	Motor cable (with Brake)	315
MFMCE0202FCD	Motor cable (without brake)	319
MFMCE0202FUD	Motor cable (without brake)	318
MFMCE0203ECT	Motor cable (with brake)	316
MFMCE0203EUT	Motor cable (with Brake)	315

MGMF (Middle inertia/Low speed high torque)

Part No.	Title	Page
MGMF092L1C5	MGMF 0.85 kW Motor	112
MGMF092L1C6	MGMF 0.85 kW Motor	112
MGMF092L1C6M	MGMF 0.85 kW Motor	246
MGMF092L1C7	MGMF 0.85 kW Motor	112
MGMF092L1C8	MGMF 0.85 kW Motor	112
MGMF092L1C8M	MGMF 0.85 kW Motor	246
MGMF092L1D5	MGMF 0.85 kW Motor	112
MGMF092L1D6	MGMF 0.85 kW Motor	112
MGMF092L1D6M	MGMF 0.85 kW Motor	246
MGMF092L1D7	MGMF 0.85 kW Motor	112
MGMF092L1D8	MGMF 0.85 kW Motor	112
MGMF092L1D8M	MGMF 0.85 kW Motor	246
MGMF092L1G5	MGMF 0.85 kW Motor	112
MGMF092L1G6	MGMF 0.85 kW Motor	112
MGMF092L1G6M	MGMF 0.85 kW Motor	246
MGMF092L1G7	MGMF 0.85 kW Motor	112
MGMF092L1G8	MGMF 0.85 kW Motor	112
MGMF092L1G8M	MGMF 0.85 kW Motor	246
MGMF092L1H5	MGMF 0.85 kW Motor	112
MGMF092L1H6	MGMF 0.85 kW Motor	112
MGMF092L1H6M	MGMF 0.85 kW Motor	246
MGMF092L1H7	MGMF 0.85 kW Motor	112
MGMF092L1H8	MGMF 0.85 kW Motor	112
MGMF092L1H8M	MGMF 0.85 kW Motor	246
MGMF132L1C5	MGMF 1.3 kW Motor	113
MGMF132L1C6	MGMF 1.3 kW Motor	113
MGMF132L1C6M	MGMF 1.3 kW Motor	247
MGMF132L1C7	MGMF 1.3 kW Motor	113
MGMF132L1C8	MGMF 1.3 kW Motor	113
MGMF132L1C8M	MGMF 1.3 kW Motor	247
MGMF132L1D5	MGMF 1.3 kW Motor	113
MGMF132L1D6	MGMF 1.3 kW Motor	113
MGMF132L1D6M	MGMF 1.3 kW Motor	247
MGMF132L1D7	MGMF 1.3 kW Motor	113
MGMF132L1D8	MGMF 1.3 kW Motor	113
MGMF132L1D8M	MGMF 1.3 kW Motor	247
MGMF132L1G5	MGMF 1.3 kW Motor	113
MGMF132L1G6	MGMF 1.3 kW Motor	113

MGMF (Middle inertia/Low speed high torque)

Part No.	Title	Page
MGMF132L1G6M	MGMF 1.3 kW Motor	247
MGMF132L1G7	MGMF 1.3 kW Motor	113
MGMF132L1G8	MGMF 1.3 kW Motor	113
MGMF132L1G8M	MGMF 1.3 kW Motor	247
MGMF132L1H5	MGMF 1.3 kW Motor	113
MGMF132L1H6	MGMF 1.3 kW Motor	113
MGMF132L1H6M	MGMF 1.3 kW Motor	247
MGMF132L1H7	MGMF 1.3 kW Motor	113
MGMF132L1H8	MGMF 1.3 kW Motor	113
MGMF132L1H8M	MGMF 1.3 kW Motor	247
MGMF182L1C5	MGMF 1.8 kW Motor	114
MGMF182L1C6	MGMF 1.8 kW Motor	114
MGMF182L1C6M	MGMF 1.8 kW Motor	248
MGMF182L1C7	MGMF 1.8 kW Motor	114
MGMF182L1C8	MGMF 1.8 kW Motor	114
MGMF182L1C8M	MGMF 1.8 kW Motor	248
MGMF182L1D5	MGMF 1.8 kW Motor	114
MGMF182L1D6	MGMF 1.8 kW Motor	114
MGMF182L1D6M	MGMF 1.8 kW Motor	248
MGMF182L1D7	MGMF 1.8 kW Motor	114
MGMF182L1D8	MGMF 1.8 kW Motor	114
MGMF182L1D8M	MGMF 1.8 kW Motor	248
MGMF182L1G5	MGMF 1.8 kW Motor	114
MGMF182L1G6	MGMF 1.8 kW Motor	114
MGMF182L1G6M	MGMF 1.8 kW Motor	248
MGMF182L1G7	MGMF 1.8 kW Motor	114
MGMF182L1G8	MGMF 1.8 kW Motor	114
MGMF182L1G8M	MGMF 1.8 kW Motor	248
MGMF182L1H5	MGMF 1.8 kW Motor	114
MGMF182L1H6	MGMF 1.8 kW Motor	114
MGMF182L1H6M	MGMF 1.8 kW Motor	248
MGMF182L1H7	MGMF 1.8 kW Motor	114
MGMF182L1H8	MGMF 1.8 kW Motor	114
MGMF182L1H8M	MGMF 1.8 kW Motor	248
MGMF242L1C5	MGMF 2.4 kW Motor	115
MGMF242L1C6	MGMF 2.4 kW Motor	115
MGMF242L1C6M	MGMF 2.4 kW Motor	249
MGMF242L1C7	MGMF 2.4 kW Motor	115
MGMF242L1C8	MGMF 2.4 kW Motor	115
MGMF242L1C8M	MGMF 2.4 kW Motor	249
MGMF242L1D5	MGMF 2.4 kW Motor	115
MGMF242L1D6	MGMF 2.4 kW Motor	115
MGMF242L1D6M	MGMF 2.4 kW Motor	249
MGMF242L1D7	MGMF 2.4 kW Motor	115
MGMF242L1D8	MGMF 2.4 kW Motor	115
MGMF242L1D8M	MGMF 2.4 kW Motor	249
MGMF242L1G5	MGMF 2.4 kW Motor	115
MGMF242L1G6	MGMF 2.4 kW Motor	115
MGMF242L1G6M	MGMF 2.4 kW Motor	249
MGMF242L1G7	MGMF 2.4 kW Motor	115
MGMF242L1G8	MGMF 2.4 kW Motor	115
MGMF242L1G8M	MGMF 2.4 kW Motor	249
MGMF242L1H5	MGMF 2.4 kW Motor	115
MGMF242L1H6	MGMF 2.4 kW Motor	115
MGMF242L1H6M	MGMF 2.4 kW Motor	249
MGMF242L1H7	MGMF 2.4 kW Motor	115
MGMF242L1H8	MGMF 2.4 kW Motor	115
MGMF242L1H8M	MGMF 2.4 kW Motor	249
MGMF292L1C5	MGMF 2.9 kW Motor	116
MGMF292L1C6	MGMF 2.9 kW Motor	116
MGMF292L1C6M	MGMF 2.9 kW Motor	250
MGMF292L1C7	MGMF 2.9 kW Motor	116
MGMF292L1C8	MGMF 2.9 kW Motor	116
MGMF292L1C8M	MGMF 2.9 kW Motor	250
MGMF292L1D5	MGMF 2.9 kW Motor	116
MGMF292L1D6	MGMF 2.9 kW Motor	116
MGMF292L1D6M	MGMF 2.9 kW Motor	250
MGMF292L1D7	MGMF 2.9 kW Motor	116
MGMF292L1D8	MGMF 2.9 kW Motor	116
MGMF292L1D8M	MGMF 2.9 kW Motor	250
MGMF292L1G5	MGMF 2.9 kW Motor	116
MGMF292L1G6	MGMF 2.9 kW Motor	116

Index
(Alphabetical Order)

MGMF (Middle inertia/Low speed high torque)

Part No.	Title	Page
MGMF292L1G6M	MGMF 2.9 kW Motor	250
MGMF292L1G7	MGMF 2.9 kW Motor	116
MGMF292L1G8	MGMF 2.9 kW Motor	116
MGMF292L1G8M	MGMF 2.9 kW Motor	250
MGMF292L1H5	MGMF 2.9 kW Motor	116
MGMF292L1H6	MGMF 2.9 kW Motor	116
MGMF292L1H6M	MGMF 2.9 kW Motor	250
MGMF292L1H7	MGMF 2.9 kW Motor	116
MGMF292L1H8	MGMF 2.9 kW Motor	116
MGMF292L1H8M	MGMF 2.9 kW Motor	250
MGMF442L1C5	MGMF 4.4 kW Motor	117
MGMF442L1C6	MGMF 4.4 kW Motor	117
MGMF442L1C6M	MGMF 4.4 kW Motor	251
MGMF442L1C7	MGMF 4.4 kW Motor	117
MGMF442L1C8	MGMF 4.4 kW Motor	117
MGMF442L1C8M	MGMF 4.4 kW Motor	251
MGMF442L1D5	MGMF 4.4 kW Motor	117
MGMF442L1D6	MGMF 4.4 kW Motor	117
MGMF442L1D6M	MGMF 4.4 kW Motor	251
MGMF442L1D7	MGMF 4.4 kW Motor	117
MGMF442L1D8	MGMF 4.4 kW Motor	117
MGMF442L1D8M	MGMF 4.4 kW Motor	251
MGMF442L1G5	MGMF 4.4 kW Motor	117
MGMF442L1G6	MGMF 4.4 kW Motor	117
MGMF442L1G6M	MGMF 4.4 kW Motor	251
MGMF442L1G7	MGMF 4.4 kW Motor	117
MGMF442L1G8	MGMF 4.4 kW Motor	117
MGMF442L1G8M	MGMF 4.4 kW Motor	251
MGMF442L1H5	MGMF 4.4 kW Motor	117
MGMF442L1H6	MGMF 4.4 kW Motor	117
MGMF442L1H6M	MGMF 4.4 kW Motor	251
MGMF442L1H7	MGMF 4.4 kW Motor	117
MGMF442L1H8	MGMF 4.4 kW Motor	117
MGMF442L1H8M	MGMF 4.4 kW Motor	251
MGMF552L1C5	MGMF 5.5kW Motor	118
MGMF552L1C6	MGMF 5.5kW Motor	118
MGMF552L1C6M	MGMF 5.5kW Motor	252
MGMF552L1D5	MGMF 5.5kW Motor	118
MGMF552L1D6	MGMF 5.5kW Motor	118
MGMF552L1D6M	MGMF 5.5kW Motor	252
MGMF552L1G5	MGMF 5.5kW Motor	118
MGMF552L1G6	MGMF 5.5kW Motor	118
MGMF552L1G6M	MGMF 5.5kW Motor	252
MGMF552L1H5	MGMF 5.5kW Motor	118
MGMF552L1H6	MGMF 5.5kW Motor	118
MGMF552L1H6M	MGMF 5.5kW Motor	252

MHMF (High inertia)

Part No.	Title	Page
MHMF011L1A1	MHMF 100 W 100 V Motor	87
MHMF011L1A2	MHMF 100 W 100 V Motor	87
MHMF011L1B1	MHMF 100 W 100 V Motor	87
MHMF011L1B2	MHMF 100 W 100 V Motor	87
MHMF011L1C1	MHMF 100 W 100 V Motor	87
MHMF011L1C2	MHMF 100 W 100 V Motor	87
MHMF011L1C3	MHMF 100 W 100 V Motor	87
MHMF011L1C4	MHMF 100 W 100 V Motor	87
MHMF011L1D1	MHMF 100 W 100 V Motor	87
MHMF011L1D2	MHMF 100 W 100 V Motor	87
MHMF011L1D3	MHMF 100 W 100 V Motor	87
MHMF011L1D4	MHMF 100 W 100 V Motor	87
MHMF011L1S1	MHMF 100 W 100 V Motor	87
MHMF011L1S2	MHMF 100 W 100 V Motor	87
MHMF011L1T1	MHMF 100 W 100 V Motor	87
MHMF011L1T2	MHMF 100 W 100 V Motor	87
MHMF011L1U1	MHMF 100 W 100 V Motor	87
MHMF011L1U2	MHMF 100 W 100 V Motor	87
MHMF011L1U3	MHMF 100 W 100 V Motor	87
MHMF011L1U4	MHMF 100 W 100 V Motor	87
MHMF011L1V1	MHMF 100 W 100 V Motor	87
MHMF011L1V2	MHMF 100 W 100 V Motor	87
MHMF011L1V3	MHMF 100 W 100 V Motor	87

MHMF (High inertia)

Part No.	Title	Page
MHMF011L1V4	MHMF 100 W 100 V Motor	87
MHMF012L1A1	MHMF 100 W 200 V Motor	88
MHMF012L1A2	MHMF 100 W 200 V Motor	88
MHMF012L1A2M	MHMF 100 W 200 V Motor	227
MHMF012L1B1	MHMF 100 W 200 V Motor	88
MHMF012L1B2	MHMF 100 W 200 V Motor	88
MHMF012L1B2M	MHMF 100 W 200 V Motor	227
MHMF012L1C1	MHMF 100 W 200 V Motor	88
MHMF012L1C2	MHMF 100 W 200 V Motor	88
MHMF012L1C2M	MHMF 100 W 200 V Motor	227
MHMF012L1C3	MHMF 100 W 200 V Motor	88
MHMF012L1C4	MHMF 100 W 200 V Motor	88
MHMF012L1C4M	MHMF 100 W 200 V Motor	227
MHMF012L1D1	MHMF 100 W 200 V Motor	88
MHMF012L1D2	MHMF 100 W 200 V Motor	88
MHMF012L1D2M	MHMF 100 W 200 V Motor	227
MHMF012L1D3	MHMF 100 W 200 V Motor	88
MHMF012L1D4	MHMF 100 W 200 V Motor	88
MHMF012L1D4M	MHMF 100 W 200 V Motor	227
MHMF012L1S1	MHMF 100 W 200 V Motor	88
MHMF012L1S2	MHMF 100 W 200 V Motor	88
MHMF012L1S2M	MHMF 100 W 200 V Motor	227
MHMF012L1T1	MHMF 100 W 200 V Motor	88
MHMF012L1T2	MHMF 100 W 200 V Motor	88
MHMF012L1T2M	MHMF 100 W 200 V Motor	227
MHMF012L1U1	MHMF 100 W 200 V Motor	88
MHMF012L1U2	MHMF 100 W 200 V Motor	88
MHMF012L1U2M	MHMF 100 W 200 V Motor	227
MHMF012L1U3	MHMF 100 W 200 V Motor	88
MHMF012L1U4	MHMF 100 W 200 V Motor	88
MHMF012L1U4M	MHMF 100 W 200 V Motor	227
MHMF012L1V1	MHMF 100 W 200 V Motor	88
MHMF012L1V2	MHMF 100 W 200 V Motor	88
MHMF012L1V2M	MHMF 100 W 200 V Motor	227
MHMF012L1V3	MHMF 100 W 200 V Motor	88
MHMF012L1V4	MHMF 100 W 200 V Motor	88
MHMF012L1V4M	MHMF 100 W 200 V Motor	227
MHMF021L1A1	MHMF 200 W 100 V Motor	89
MHMF021L1A2	MHMF 200 W 100 V Motor	89
MHMF021L1B1	MHMF 200 W 100 V Motor	89
MHMF021L1B2	MHMF 200 W 100 V Motor	89
MHMF021L1C1	MHMF 200 W 100 V Motor	89
MHMF021L1C2	MHMF 200 W 100 V Motor	89
MHMF021L1C3	MHMF 200 W 100 V Motor	89
MHMF021L1C4	MHMF 200 W 100 V Motor	89
MHMF021L1D1	MHMF 200 W 100 V Motor	89
MHMF021L1D2	MHMF 200 W 100 V Motor	89
MHMF021L1D3	MHMF 200 W 100 V Motor	89
MHMF021L1D4	MHMF 200 W 100 V Motor	89
MHMF021L1S1	MHMF 200 W 100 V Motor	89
MHMF021L1S2	MHMF 200 W 100 V Motor	89
MHMF021L1T1	MHMF 200 W 100 V Motor	89
MHMF021L1T2	MHMF 200 W 100 V Motor	89
MHMF021L1U1	MHMF 200 W 100 V Motor	89
MHMF021L1U2	MHMF 200 W 100 V Motor	89
MHMF021L1U3	MHMF 200 W 100 V Motor	89
MHMF021L1U4	MHMF 200 W 100 V Motor	89
MHMF021L1V1	MHMF 200 W 100 V Motor	89
MHMF021L1V2	MHMF 200 W 100 V Motor	89
MHMF021L1V3	MHMF 200 W 100 V Motor	89
MHMF021L1V4	MHMF 200 W 100 V Motor	89
MHMF022L1A1	MHMF 200 W 200 V Motor	90
MHMF022L1A2	MHMF 200 W 200 V Motor	90
MHMF022L1A2M	MHMF 200 W 200 V Motor	228
MHMF022L1B1	MHMF 200 W 200 V Motor	90
MHMF022L1B2	MHMF 200 W 200 V Motor	90
MHMF022L1B2M	MHMF 200 W 200 V Motor	228
MHMF022L1C1	MHMF 200 W 200 V Motor	90
MHMF022L1C2	MHMF 200 W 200 V Motor	90
MHMF022L1C2M	MHMF 200 W 200 V Motor	228
MHMF022L1C3	MHMF 200 W 200 V Motor	90
MHMF022L1C4	MHMF 200 W 200 V Motor	90

MHMF (High inertia)

Part No.	Title	Page
MHMF022L1C4M	MHMF 200 W 200 V Motor	228
MHMF022L1D1	MHMF 200 W 200 V Motor	90
MHMF022L1D2	MHMF 200 W 200 V Motor	90
MHMF022L1D2M	MHMF 200 W 200 V Motor	228
MHMF022L1D3	MHMF 200 W 200 V Motor	90
MHMF022L1D4	MHMF 200 W 200 V Motor	90
MHMF022L1D4M	MHMF 200 W 200 V Motor	228
MHMF022L1S1	MHMF 200 W 200 V Motor	90
MHMF022L1S2	MHMF 200 W 200 V Motor	90
MHMF022L1S2M	MHMF 200 W 200 V Motor	228
MHMF022L1T1	MHMF 200 W 200 V Motor	90
MHMF022L1T2	MHMF 200 W 200 V Motor	90
MHMF022L1T2M	MHMF 200 W 200 V Motor	228
MHMF022L1U1	MHMF 200 W 200 V Motor	90
MHMF022L1U2	MHMF 200 W 200 V Motor	90
MHMF022L1U2M	MHMF 200 W 200 V Motor	228
MHMF022L1U3	MHMF 200 W 200 V Motor	90
MHMF022L1U4	MHMF 200 W 200 V Motor	90
MHMF022L1U4M	MHMF 200 W 200 V Motor	228
MHMF022L1V1	MHMF 200 W 200 V Motor	90
MHMF022L1V2	MHMF 200 W 200 V Motor	90
MHMF022L1V2M	MHMF 200 W 200 V Motor	228
MHMF022L1V3	MHMF 200 W 200 V Motor	90
MHMF022L1V4	MHMF 200 W 200 V Motor	90
MHMF022L1V4M	MHMF 200 W 200 V Motor	228
MHMF041L1A1	MHMF 400 W 100 V Motor	91
MHMF041L1A2	MHMF 400 W 100 V Motor	91
MHMF041L1B1	MHMF 400 W 100 V Motor	91
MHMF041L1B2	MHMF 400 W 100 V Motor	91
MHMF041L1C1	MHMF 400 W 100 V Motor	91
MHMF041L1C2	MHMF 400 W 100 V Motor	91
MHMF041L1C3	MHMF 400 W 100 V Motor	91
MHMF041L1C4	MHMF 400 W 100 V Motor	91
MHMF041L1D1	MHMF 400 W 100 V Motor	91
MHMF041L1D2	MHMF 400 W 100 V Motor	91
MHMF041L1D3	MHMF 400 W 100 V Motor	91
MHMF041L1D4	MHMF 400 W 100 V Motor	91
MHMF041L1S1	MHMF 400 W 100 V Motor	91
MHMF041L1S2	MHMF 400 W 100 V Motor	91
MHMF041L1T1	MHMF 400 W 100 V Motor	91
MHMF041L1T2	MHMF 400 W 100 V Motor	91
MHMF041L1U1	MHMF 400 W 100 V Motor	91
MHMF041L1U2	MHMF 400 W 100 V Motor	91
MHMF041L1U3	MHMF 400 W 100 V Motor	91
MHMF041L1U4	MHMF 400 W 100 V Motor	91
MHMF041L1V1	MHMF 400 W 100 V Motor	91
MHMF041L1V2	MHMF 400 W 100 V Motor	91
MHMF041L1V3	MHMF 400 W 100 V Motor	91
MHMF041L1V4	MHMF 400 W 100 V Motor	91
MHMF042L1A1	MHMF 400 W 200 V Motor	92
MHMF042L1A2	MHMF 400 W 200 V Motor	92
MHMF042L1A2M	MHMF 400 W 200 V Motor	229
MHMF042L1B1	MHMF 400 W 200 V Motor	92
MHMF042L1B2	MHMF 400 W 200 V Motor	92
MHMF042L1B2M	MHMF 400 W 200 V Motor	229
MHMF042L1C1	MHMF 400 W 200 V Motor	92
MHMF042L1C2	MHMF 400 W 200 V Motor	92
MHMF042L1C2M	MHMF 400 W 200 V Motor	229
MHMF042L1C3	MHMF 400 W 200 V Motor	92
MHMF042L1C4	MHMF 400 W 200 V Motor	92
MHMF042L1C4M	MHMF 400 W 200 V Motor	229
MHMF042L1D1	MHMF 400 W 200 V Motor	92
MHMF042L1D2	MHMF 400 W 200 V Motor	92
MHMF042L1D2M	MHMF 400 W 200 V Motor	229
MHMF042L1D3	MHMF 400 W 200 V Motor	92
MHMF042L1D4	MHMF 400 W 200 V Motor	92
MHMF042L1D4M	MHMF 400 W 200 V Motor	229
MHMF042L1S1	MHMF 400 W 200 V Motor	92
MHMF042L1S2	MHMF 400 W 200 V Motor	92
MHMF042L1S2M	MHMF 400 W 200 V Motor	229
MHMF042L1T1	MHMF 400 W 200 V Motor	92
MHMF042L1T2	MHMF 400 W 200 V Motor	92

MHMF (High inertia)

Part No.	Title	Page
MHMF042L1T2M	MHMF 400 W 200 V Motor	229
MHMF042L1U1	MHMF 400 W 200 V Motor	92
MHMF042L1U2	MHMF 400 W 200 V Motor	92
MHMF042L1U2M	MHMF 400 W 200 V Motor	229
MHMF042L1U3	MHMF 400 W 200 V Motor	92
MHMF042L1U4	MHMF 400 W 200 V Motor	92
MHMF042L1U4M	MHMF 400 W 200 V Motor	229
MHMF042L1V1	MHMF 400 W 200 V Motor	92
MHMF042L1V2	MHMF 400 W 200 V Motor	92
MHMF042L1V2M	MHMF 400 W 200 V Motor	229
MHMF042L1V3	MHMF 400 W 200 V Motor	92
MHMF042L1V4	MHMF 400 W 200 V Motor	92
MHMF042L1V4M	MHMF 400 W 200 V Motor	229
MHMF082L1A1	MHMF 750 W 200 V Motor	93
MHMF082L1A2	MHMF 750 W 200 V Motor	93
MHMF082L1A2M	MHMF 750 W 200 V Motor	230
MHMF082L1B1	MHMF 750 W 200 V Motor	93
MHMF082L1B2	MHMF 750 W 200 V Motor	93
MHMF082L1B2M	MHMF 750 W 200 V Motor	230
MHMF082L1C1	MHMF 750 W 200 V Motor	93
MHMF082L1C2	MHMF 750 W 200 V Motor	93
MHMF082L1C2M	MHMF 750 W 200 V Motor	230
MHMF082L1C3	MHMF 750 W 200 V Motor	93
MHMF082L1C4	MHMF 750 W 200 V Motor	93
MHMF082L1C4M	MHMF 750 W 200 V Motor	230
MHMF082L1D1	MHMF 750 W 200 V Motor	93
MHMF082L1D2	MHMF 750 W 200 V Motor	93
MHMF082L1D2M	MHMF 750 W 200 V Motor	230
MHMF082L1D3	MHMF 750 W 200 V Motor	93
MHMF082L1D4	MHMF 750 W 200 V Motor	93
MHMF082L1D4M	MHMF 750 W 200 V Motor	230
MHMF082L1S1	MHMF 750 W 200 V Motor	93
MHMF082L1S2	MHMF 750 W 200 V Motor	93
MHMF082L1S2M	MHMF 750 W 200 V Motor	230
MHMF082L1T1	MHMF 750 W 200 V Motor	93
MHMF082L1T2	MHMF 750 W 200 V Motor	93
MHMF082L1T2M	MHMF 750 W 200 V Motor	230
MHMF082L1U1	MHMF 750 W 200 V Motor	93
MHMF082L1U2	MHMF 750 W 200 V Motor	93
MHMF082L1U2M	MHMF 750 W 200 V Motor	230
MHMF082L1U3	MHMF 750 W 200 V Motor	93
MHMF082L1U4	MHMF 750 W 200 V Motor	93
MHMF082L1U4M	MHMF 750 W 200 V Motor	230
MHMF082L1V1	MHMF 750 W 200 V Motor	93
MHMF082L1V2	MHMF 750 W 200 V Motor	93
MHMF082L1V2M	MHMF 750 W 200 V Motor	230
MHMF082L1V3	MHMF 750 W 200 V Motor	93
MHMF082L1V4	MHMF 750 W 200 V Motor	93
MHMF082L1V4M	MHMF 750 W 200 V Motor	230
MHMF092L1A1	MHMF 1000 W 200 V Motor	94
MHMF092L1A2	MHMF 1000 W 200 V Motor	94
MHMF092L1A2M	MHMF 1000 W 200 V Motor	231
MHMF092L1B1	MHMF 1000 W 200 V Motor	94
MHMF092L1B2	MHMF 1000 W 200 V Motor	94
MHMF092L1B2M	MHMF 1000 W 200 V Motor	231
MHMF092L1C1	MHMF 1000 W 200 V Motor	94
MHMF092L1C2	MHMF 1000 W 200 V Motor	94
MHMF092L1C2M	MHMF 1000 W 200 V Motor	231
MHMF092L1C3	MHMF 1000 W 200 V Motor	94
MHMF092L1C4	MHMF 1000 W 200 V Motor	94
MHMF092L1C4M	MHMF 1000 W 200 V Motor	231
MHMF092L1D1	MHMF 1000 W 200 V Motor	94
MHMF092L1D2	MHMF 1000 W 200 V Motor	94
MHMF092L1D2M	MHMF 1000 W 200 V Motor	231
MHMF092L1D3	MHMF 1000 W 200 V Motor	94
MHMF092L1D4	MHMF 1000 W 200 V Motor	94
MHMF092L1D4M	MHMF 1000 W 200 V Motor	231
MHMF092L1S1	MHMF 1000 W 200 V Motor	94
MHMF092L1S2	MHMF 1000 W 200 V Motor	94
MHMF092L1S2M	MHMF 1000 W 200 V Motor	231
MHMF092L1T1	MHMF 1000 W 200 V Motor	94
MHMF092L1T2	MHMF 1000 W 200 V Motor	94

Index
(Alphabetical Order)

MHMF (High inertia)		
Part No.	Title	Page
MHMF092L1T2M	MHMF 1000 W 200 V Motor	231
MHMF092L1U1	MHMF 1000 W 200 V Motor	94
MHMF092L1U2	MHMF 1000 W 200 V Motor	94
MHMF092L1U2M	MHMF 1000 W 200 V Motor	231
MHMF092L1U3	MHMF 1000 W 200 V Motor	94
MHMF092L1U4	MHMF 1000 W 200 V Motor	94
MHMF092L1U4M	MHMF 1000 W 200 V Motor	231
MHMF092L1V1	MHMF 1000 W 200 V Motor	94
MHMF092L1V2	MHMF 1000 W 200 V Motor	94
MHMF092L1V2M	MHMF 1000 W 200 V Motor	231
MHMF092L1V3	MHMF 1000 W 200 V Motor	94
MHMF092L1V4	MHMF 1000 W 200 V Motor	94
MHMF092L1V4M	MHMF 1000 W 200 V Motor	231
MHMF102L1C5	MHMF 1.0 kW 200 V Motor	95
MHMF102L1C6	MHMF 1.0 kW 200 V Motor	95
MHMF102L1C6M	MHMF 1.0 kW 200 V Motor	232
MHMF102L1C7	MHMF 1.0 kW 200 V Motor	95
MHMF102L1C8	MHMF 1.0 kW 200 V Motor	95
MHMF102L1C8M	MHMF 1.0 kW 200 V Motor	232
MHMF102L1D5	MHMF 1.0 kW 200 V Motor	95
MHMF102L1D6	MHMF 1.0 kW 200 V Motor	95
MHMF102L1D6M	MHMF 1.0 kW 200 V Motor	232
MHMF102L1D7	MHMF 1.0 kW 200 V Motor	95
MHMF102L1D8	MHMF 1.0 kW 200 V Motor	95
MHMF102L1D8M	MHMF 1.0 kW 200 V Motor	232
MHMF102L1G5	MHMF 1.0 kW 200 V Motor	95
MHMF102L1G6	MHMF 1.0 kW 200 V Motor	95
MHMF102L1G6M	MHMF 1.0 kW 200 V Motor	232
MHMF102L1G7	MHMF 1.0 kW 200 V Motor	95
MHMF102L1G8	MHMF 1.0 kW 200 V Motor	95
MHMF102L1G8M	MHMF 1.0 kW 200 V Motor	232
MHMF102L1H5	MHMF 1.0 kW 200 V Motor	95
MHMF102L1H6	MHMF 1.0 kW 200 V Motor	95
MHMF102L1H6M	MHMF 1.0 kW 200 V Motor	232
MHMF102L1H7	MHMF 1.0 kW 200 V Motor	95
MHMF102L1H8	MHMF 1.0 kW 200 V Motor	95
MHMF102L1H8M	MHMF 1.0 kW 200 V Motor	232
MHMF152L1C5	MHMF 1.5 kW 200 V Motor	96
MHMF152L1C6	MHMF 1.5 kW 200 V Motor	96
MHMF152L1C6M	MHMF 1.5 kW 200 V Motor	233
MHMF152L1C7	MHMF 1.5 kW 200 V Motor	96
MHMF152L1C8	MHMF 1.5 kW 200 V Motor	96
MHMF152L1C8M	MHMF 1.5 kW 200 V Motor	233
MHMF152L1D5	MHMF 1.5 kW 200 V Motor	96
MHMF152L1D6	MHMF 1.5 kW 200 V Motor	96
MHMF152L1D6M	MHMF 1.5 kW 200 V Motor	233
MHMF152L1D7	MHMF 1.5 kW 200 V Motor	96
MHMF152L1D8	MHMF 1.5 kW 200 V Motor	96
MHMF152L1D8M	MHMF 1.5 kW 200 V Motor	233
MHMF152L1G5	MHMF 1.5 kW 200 V Motor	96
MHMF152L1G6	MHMF 1.5 kW 200 V Motor	96
MHMF152L1G6M	MHMF 1.5 kW 200 V Motor	233
MHMF152L1G7	MHMF 1.5 kW 200 V Motor	96
MHMF152L1G8	MHMF 1.5 kW 200 V Motor	96
MHMF152L1G8M	MHMF 1.5 kW 200 V Motor	233
MHMF152L1H5	MHMF 1.5 kW 200 V Motor	96
MHMF152L1H6	MHMF 1.5 kW 200 V Motor	96
MHMF152L1H6M	MHMF 1.5 kW 200 V Motor	233
MHMF152L1H7	MHMF 1.5 kW 200 V Motor	96
MHMF152L1H8	MHMF 1.5 kW 200 V Motor	96
MHMF152L1H8M	MHMF 1.5 kW 200 V Motor	233
MHMF202L1C5	MHMF 2.0 kW 200 V Motor	97
MHMF202L1C6	MHMF 2.0 kW 200 V Motor	97
MHMF202L1C6M	MHMF 2.0 kW 200 V Motor	234
MHMF202L1C7	MHMF 2.0 kW 200 V Motor	97
MHMF202L1C8	MHMF 2.0 kW 200 V Motor	97
MHMF202L1C8M	MHMF 2.0 kW 200 V Motor	234
MHMF202L1D5	MHMF 2.0 kW 200 V Motor	97
MHMF202L1D6	MHMF 2.0 kW 200 V Motor	97
MHMF202L1D6M	MHMF 2.0 kW 200 V Motor	234
MHMF202L1D7	MHMF 2.0 kW 200 V Motor	97
MHMF202L1D8	MHMF 2.0 kW 200 V Motor	97

MHMF (High inertia)		
Part No.	Title	Page
MHMF202L1D8M	MHMF 2.0 kW 200 V Motor	234
MHMF202L1G5	MHMF 2.0 kW 200 V Motor	97
MHMF202L1G6	MHMF 2.0 kW 200 V Motor	97
MHMF202L1G6M	MHMF 2.0 kW 200 V Motor	234
MHMF202L1G7	MHMF 2.0 kW 200 V Motor	97
MHMF202L1G8	MHMF 2.0 kW 200 V Motor	97
MHMF202L1G8M	MHMF 2.0 kW 200 V Motor	234
MHMF202L1H5	MHMF 2.0 kW 200 V Motor	97
MHMF202L1H6	MHMF 2.0 kW 200 V Motor	97
MHMF202L1H6M	MHMF 2.0 kW 200 V Motor	234
MHMF202L1H7	MHMF 2.0 kW 200 V Motor	97
MHMF202L1H8	MHMF 2.0 kW 200 V Motor	97
MHMF202L1H8M	MHMF 2.0 kW 200 V Motor	234
MHMF302L1C5	MHMF 3.0 kW 200 V Motor	98
MHMF302L1C6	MHMF 3.0 kW 200 V Motor	98
MHMF302L1C6M	MHMF 3.0 kW 200 V Motor	235
MHMF302L1C7	MHMF 3.0 kW 200 V Motor	98
MHMF302L1C8	MHMF 3.0 kW 200 V Motor	98
MHMF302L1C8M	MHMF 3.0 kW 200 V Motor	235
MHMF302L1D5	MHMF 3.0 kW 200 V Motor	98
MHMF302L1D6	MHMF 3.0 kW 200 V Motor	98
MHMF302L1D6M	MHMF 3.0 kW 200 V Motor	235
MHMF302L1D7	MHMF 3.0 kW 200 V Motor	98
MHMF302L1D8	MHMF 3.0 kW 200 V Motor	98
MHMF302L1D8M	MHMF 3.0 kW 200 V Motor	235
MHMF302L1G5	MHMF 3.0 kW 200 V Motor	98
MHMF302L1G6	MHMF 3.0 kW 200 V Motor	98
MHMF302L1G6M	MHMF 3.0 kW 200 V Motor	235
MHMF302L1G7	MHMF 3.0 kW 200 V Motor	98
MHMF302L1G8	MHMF 3.0 kW 200 V Motor	98
MHMF302L1G8M	MHMF 3.0 kW 200 V Motor	235
MHMF302L1H5	MHMF 3.0 kW 200 V Motor	98
MHMF302L1H6	MHMF 3.0 kW 200 V Motor	98
MHMF302L1H6M	MHMF 3.0 kW 200 V Motor	235
MHMF302L1H7	MHMF 3.0 kW 200 V Motor	98
MHMF302L1H8	MHMF 3.0 kW 200 V Motor	98
MHMF302L1H8M	MHMF 3.0 kW 200 V Motor	235
MHMF402L1C5	MHMF 4.0 kW 200 V Motor	99
MHMF402L1C6	MHMF 4.0 kW 200 V Motor	99
MHMF402L1C6M	MHMF 4.0 kW 200 V Motor	236
MHMF402L1C7	MHMF 4.0 kW 200 V Motor	99
MHMF402L1C8	MHMF 4.0 kW 200 V Motor	99
MHMF402L1C8M	MHMF 4.0 kW 200 V Motor	236
MHMF402L1D5	MHMF 4.0 kW 200 V Motor	99
MHMF402L1D6	MHMF 4.0 kW 200 V Motor	99
MHMF402L1D6M	MHMF 4.0 kW 200 V Motor	236
MHMF402L1D7	MHMF 4.0 kW 200 V Motor	99
MHMF402L1D8	MHMF 4.0 kW 200 V Motor	99
MHMF402L1D8M	MHMF 4.0 kW 200 V Motor	236
MHMF402L1G5	MHMF 4.0 kW 200 V Motor	99
MHMF402L1G6	MHMF 4.0 kW 200 V Motor	99
MHMF402L1G6M	MHMF 4.0 kW 200 V Motor	236
MHMF402L1G7	MHMF 4.0 kW 200 V Motor	99
MHMF402L1G8	MHMF 4.0 kW 200 V Motor	99
MHMF402L1G8M	MHMF 4.0 kW 200 V Motor	236
MHMF402L1H5	MHMF 4.0 kW 200 V Motor	99
MHMF402L1H6	MHMF 4.0 kW 200 V Motor	99
MHMF402L1H6M	MHMF 4.0 kW 200 V Motor	236
MHMF402L1H7	MHMF 4.0 kW 200 V Motor	99
MHMF402L1H8	MHMF 4.0 kW 200 V Motor	99
MHMF402L1H8M	MHMF 4.0 kW 200 V Motor	236
MHMF502L1C5	MHMF 5.0 kW 200 V Motor	100
MHMF502L1C6	MHMF 5.0 kW 200 V Motor	100
MHMF502L1C6M	MHMF 5.0 kW 200 V Motor	237
MHMF502L1C7	MHMF 5.0 kW 200 V Motor	100
MHMF502L1C8	MHMF 5.0 kW 200 V Motor	100
MHMF502L1C8M	MHMF 5.0 kW 200 V Motor	237
MHMF502L1D5	MHMF 5.0 kW 200 V Motor	100
MHMF502L1D6	MHMF 5.0 kW 200 V Motor	100
MHMF502L1D6M	MHMF 5.0 kW 200 V Motor	237
MHMF502L1D7	MHMF 5.0 kW 200 V Motor	100
MHMF502L1D8	MHMF 5.0 kW 200 V Motor	100

MHMF (High inertia)		
Part No.	Title	Page
MHMF502L1D8M	MHMF 5.0 kW 200 V Motor	237
MHMF502L1G5	MHMF 5.0 kW 200 V Motor	100
MHMF502L1G6	MHMF 5.0 kW 200 V Motor	100
MHMF502L1G6M	MHMF 5.0 kW 200 V Motor	237
MHMF502L1G7	MHMF 5.0 kW 200 V Motor	100
MHMF502L1G8	MHMF 5.0 kW 200 V Motor	100
MHMF502L1G8M	MHMF 5.0 kW 200 V Motor	237
MHMF502L1H5	MHMF 5.0 kW 200 V Motor	100
MHMF502L1H6	MHMF 5.0 kW 200 V Motor	100
MHMF502L1H6M	MHMF 5.0 kW 200 V Motor	237
MHMF502L1H7	MHMF 5.0 kW 200 V Motor	100
MHMF502L1H8	MHMF 5.0 kW 200 V Motor	100
MHMF502L1H8M	MHMF 5.0 kW 200 V Motor	237
MHMF752L1C5	MHMF 7.5 kW Motor	101
MHMF752L1C6	MHMF 7.5 kW Motor	101
MHMF752L1C6M	MHMF 7.5 kW Motor	238
MHMF752L1D5	MHMF 7.5 kW Motor	101
MHMF752L1D6	MHMF 7.5 kW Motor	101
MHMF752L1D6M	MHMF 7.5 kW Motor	238
MHMF752L1G5	MHMF 7.5 kW Motor	101
MHMF752L1G6	MHMF 7.5 kW Motor	101
MHMF752L1G6M	MHMF 7.5 kW Motor	238
MHMF752L1H5	MHMF 7.5 kW Motor	101
MHMF752L1H6	MHMF 7.5 kW Motor	101
MHMF752L1H6M	MHMF 7.5 kW Motor	238
MHMF5AZL1A1	MHMF 50 W 100 V/200 V common Motor	85,86
MHMF5AZL1A2	MHMF 50 W 100 V/200 V common Motor	85,86
MHMF5AZL1A2M	MHMF 50 W 100 V/200 V common Motor	211
MHMF5AZL1B1	MHMF 50 W 100 V/200 V common Motor	85,86
MHMF5AZL1B2	MHMF 50 W 100 V/200 V common Motor	85,86
MHMF5AZL1B2M	MHMF 50 W 100 V/200 V common Motor	211
MHMF5AZL1C1	MHMF 50 W 100 V/200 V common Motor	85,86
MHMF5AZL1C2	MHMF 50 W 100 V/200 V common Motor	85,86
MHMF5AZL1C2M	MHMF 50 W 100 V/200 V common Motor	211
MHMF5AZL1C3	MHMF 50 W 100 V/200 V common Motor	85,86
MHMF5AZL1C4	MHMF 50 W 100 V/200 V common Motor	85,86
MHMF5AZL1C4M	MHMF 50 W 100 V/200 V common Motor	211
MHMF5AZL1D1	MHMF 50 W 100 V/200 V common Motor	85,86
MHMF5AZL1D2	MHMF 50 W 100 V/200 V common Motor	85,86
MHMF5AZL1D2M	MHMF 50 W 100 V/200 V common Motor	211
MHMF5AZL1D3	MHMF 50 W 100 V/200 V common Motor	85,86
MHMF5AZL1D4	MHMF 50 W 100 V/200 V common Motor	85,86
MHMF5AZL1D4M	MHMF 50 W 100 V/200 V common Motor	211
MHMF5AZL1S1	MHMF 50 W 100 V/200 V common Motor	85,86
MHMF5AZL1S2	MHMF 50 W 100 V/200 V common Motor	85,86
MHMF5AZL1S2M	MHMF 50 W 100 V/200 V common Motor	211
MHMF5AZL1T1	MHMF 50 W 100 V/200 V common Motor	85,86
MHMF5AZL1T2	MHMF 50 W 100 V/200 V common Motor	85,86
MHMF5AZL1T2M	MHMF 50 W 100 V/200 V common Motor	211
MHMF5AZL1U1	MHMF 50 W 100 V/200 V common Motor	85,86
MHMF5AZL1U2	MHMF 50 W 100 V/200 V common Motor	85,86
MHMF5AZL1U2M	MHMF 50 W 100 V/200 V common Motor	211
MHMF5AZL1U3	MHMF 50 W 100 V/200 V common Motor	85,86
MHMF5AZL1U4	MHMF 50 W 100 V/200 V common Motor	85,86
MHMF5AZL1U4M	MHMF 50 W 100 V/200 V common Motor	211
MHMF5AZL1V1	MHMF 50 W 100 V/200 V common Motor	85,86
MHMF5AZL1V2	MHMF 50 W 100 V/200 V common Motor	85,86
MHMF5AZL1V2M	MHMF 50 W 100 V/200 V common Motor	211
MHMF5AZL1V3	MHMF 50 W 100 V/200 V common Motor	85,86
MHMF5AZL1V4	MHMF 50 W 100 V/200 V common Motor	85,86
MHMF5AZL1V4M	MHMF 50 W 100 V/200 V common Motor	211

MHMF with Gear Reducer (High inertia)		
Part No.	Title	Page
MHMF011L31N	MHMF with reduction gear 100 W 100 V Motor	294,302
MHMF011L32N	MHMF with reduction gear 100 W 100 V Motor	294,302
MHMF011L33N	MHMF with reduction gear 100 W 100 V Motor	294,302
MHMF011L41N	MHMF with reduction gear 100 W 100 V Motor	294,302
MHMF011L42N	MHMF with reduction gear 100 W 100 V Motor	294,302
MHMF011L43N	MHMF with reduction gear 100 W 100 V Motor	294,302
MHMF011L71N	MHMF with reduction gear 100 W 100 V Motor	294,301
MHMF011L72N	MHMF with reduction gear 100 W 100 V Motor	294,301

MHMF with Gear Reducer (High inertia)		
Part No.	Title	Page
MHMF011L73N	MHMF with reduction gear 100 W 100 V Motor	294,301
MHMF011L81N	MHMF with reduction gear 100 W 100 V Motor	294,301
MHMF011L82N	MHMF with reduction gear 100 W 100 V Motor	294,301
MHMF011L83N	MHMF with reduction gear 100 W 100 V Motor	294,301
MHMF012L31N	MHMF with reduction gear 100 W 200 V Motor	294,302
MHMF012L32N	MHMF with reduction gear 100 W 200 V Motor	294,302
MHMF012L33N	MHMF with reduction gear 100 W 200 V Motor	294,302
MHMF012L41N	MHMF with reduction gear 100 W 200 V Motor	294,302
MHMF012L42N	MHMF with reduction gear 100 W 200 V Motor	294,302
MHMF012L43N	MHMF with reduction gear 100 W 200 V Motor	294,302
MHMF012L71N	MHMF with reduction gear 100 W 200 V Motor	294,301
MHMF012L72N	MHMF with reduction gear 100 W 200 V Motor	294,301
MHMF012L73N	MHMF with reduction gear 100 W 200 V Motor	294,301
MHMF012L81N	MHMF with reduction gear 100 W 200 V Motor	294,301
MHMF012L82N	MHMF with reduction gear 100 W 200 V Motor	294,301
MHMF012L83N	MHMF with reduction gear 100 W 200 V Motor	294,301
MHMF021L31N	MHMF with reduction gear 200 W 100 V Motor	294,302
MHMF021L32N	MHMF with reduction gear 200 W 100 V Motor	294,302
MHMF021L33N	MHMF with reduction gear 200 W 100 V Motor	294,302
MHMF021L34N	MHMF with reduction gear 200 W 100 V Motor	294,302
MHMF021L41N	MHMF with reduction gear 200 W 100 V Motor	294,302
MHMF021L42N	MHMF with reduction gear 200 W 100 V Motor	294,302
MHMF021L43N	MHMF with reduction gear 200 W 100 V Motor	294,302
MHMF021L44N	MHMF with reduction gear 200 W 100 V Motor	294,302
MHMF021L71N	MHMF with reduction gear 200 W 100 V Motor	294,301
MHMF021L72N	MHMF with reduction gear 200 W 100 V Motor	294,301
MHMF021L73N	MHMF with reduction gear 200 W 100 V Motor	294,301
MHMF021L81N	MHMF with reduction gear 200 W 100 V Motor	294,301
MHMF021L82N	MHMF with reduction gear 200 W 100 V Motor	294,301
MHMF021L83N	MHMF with reduction gear 200 W 100 V Motor	294,301
MHMF021L84N	MHMF with reduction gear 200 W 100 V Motor	294,301
MHMF022L31N	MHMF with reduction gear 200 W 200 V Motor	294,302
MHMF022L32N	MHMF with reduction gear 200 W 200 V Motor	294,302
MHMF022L33N	MHMF with reduction gear 200 W 200 V Motor	294,302
MHMF022L34N	MHMF with reduction gear 200 W 200 V Motor	294,302
MHMF022L41N	MHMF with reduction gear 200 W 200 V Motor	294,302
MHMF022L42N	MHMF with reduction gear 200 W 200 V Motor	294,302
MHMF022L43N	MHMF with reduction gear 200 W 200 V Motor	294,302
MHMF022L44N	MHMF with reduction gear 200 W 200 V Motor	294,302
MHMF022L71N	MHMF with reduction gear 200 W 200 V Motor	294,301
MHMF022L72N	MHMF with reduction gear 200 W 200 V Motor	294,301
MHMF022L73N	MHMF with reduction gear 200 W 200 V Motor	294,301
MHMF022L74N	MHMF with reduction gear 200 W 200 V Motor	294,301
MHMF022L81N	MHMF with reduction gear 200 W 200 V Motor	294,301
MHMF022L82N	MHMF with reduction gear 200 W 200 V Motor	294,301
MHMF022L83N	MHMF with reduction gear 200 W 200 V Motor	294,301
MHMF022L84N	MHMF with reduction gear 200 W 200 V Motor	294,301
MHMF041L31N	MHMF with reduction gear 400 W 100 V Motor	294,302
MHMF041L32N	MHMF with reduction gear 400 W 100 V Motor	294,302
MHMF041L33N	MHMF with reduction gear 400 W 100 V Motor	294,302
MHMF041L41N	MHMF with reduction gear 400 W 100 V Motor	294,302
MHMF041L42N	MHMF with reduction gear 400 W 100 V Motor	294,302
MHMF041L43N	MHMF with reduction gear 400 W 100 V Motor	294,302
MHMF041L71N	MHMF with reduction gear 400 W 100 V Motor	294,301
MHMF041L72N	MHMF with reduction gear 400 W 100 V Motor	294,301
MHMF041L73N	MHMF with reduction gear 400 W 100 V Motor	294,301
MHMF041L81N	MHMF with reduction gear 400 W 100 V Motor	294,301
MHMF041L82N	MHMF with reduction gear 400 W 100 V Motor	294,301
MHMF041L83N	MHMF with reduction gear 400 W 100 V Motor	294,301
MHMF042L31N	MHMF with reduction gear 400 W 200 V Motor	294,302
MHMF042L32N	MHMF with reduction gear 400 W 200 V Motor	294,302
MHMF042L33N	MHMF with reduction gear 400 W 200 V Motor	294,302
MHMF042L41N	MHMF with reduction gear 400 W 200 V Motor	294,302
MHMF042L42N	MHMF with reduction gear 400 W 200 V Motor	294,302
MHMF042L43N	MHMF with reduction gear 400 W 200 V Motor	294,302
MHMF042L71N	MHMF with reduction gear 400 W 200 V Motor	294,301
MHMF042L72N	MHMF with reduction gear 400 W 200 V Motor	294,301
MHMF042L73N	MHMF with reduction gear 400 W 200 V Motor	294,301
MHMF042L81N	MHMF with reduction gear 400 W 200 V Motor	294,301
MHMF042L82N	MHMF with reduction gear 400 W 200 V Motor	294,301
MHMF042L83N	MHMF with reduction gear 400 W 200 V Motor	294,301

Index
(Alphabetical Order)

MHMF with Gear Reducer (High inertia)		
Part No.	Title	Page
MHMF082L31N	MHMF with reduction gear 750 W 200 V Motor	294,302
MHMF082L32N	MHMF with reduction gear 750 W 200 V Motor	294,302
MHMF082L33N	MHMF with reduction gear 750 W 200 V Motor	294,302
MHMF082L34N	MHMF with reduction gear 750 W 200 V Motor	294,302
MHMF082L41N	MHMF with reduction gear 750 W 200 V Motor	294,302
MHMF082L42N	MHMF with reduction gear 750 W 200 V Motor	294,302
MHMF082L43N	MHMF with reduction gear 750 W 200 V Motor	294,302
MHMF082L44N	MHMF with reduction gear 750 W 200 V Motor	294,302
MHMF082L71N	MHMF with reduction gear 750 W 200 V Motor	294,301
MHMF082L72N	MHMF with reduction gear 750 W 200 V Motor	294,301
MHMF082L73N	MHMF with reduction gear 750 W 200 V Motor	294,301
MHMF082L74N	MHMF with reduction gear 750 W 200 V Motor	294,301
MHMF082L81N	MHMF with reduction gear 750 W 200 V Motor	294,301
MHMF082L82N	MHMF with reduction gear 750 W 200 V Motor	294,301
MHMF082L83N	MHMF with reduction gear 750 W 200 V Motor	294,301
MHMF082L84N	MHMF with reduction gear 750 W 200 V Motor	294,301

MKDET		
Part No.	Title	Page
MKDET1105P	E series driver: K-frame	383 385 388
MKDET1110P		
MKDET1310P		
MKDET1505P		

MLDET		
Part No.	Title	Page
MLDET2110P	E series driver: L-frame	383 385 388
MLDET2210P		
MLDET2310P		
MLDET2510P		

MQMF (Middle inertia flat type)		
Part No.	Title	Page
MQMF011L1A1	MQMF 100 W 100 V Motor	79
MQMF011L1A2	MQMF 100 W 100 V Motor	79
MQMF011L1B1	MQMF 100 W 100 V Motor	79
MQMF011L1B2	MQMF 100 W 100 V Motor	79
MQMF011L1C1	MQMF 100 W 100 V Motor	79
MQMF011L1C2	MQMF 100 W 100 V Motor	79
MQMF011L1C3	MQMF 100 W 100 V Motor	79
MQMF011L1C4	MQMF 100 W 100 V Motor	79
MQMF011L1D1	MQMF 100 W 100 V Motor	79
MQMF011L1D2	MQMF 100 W 100 V Motor	79
MQMF011L1D3	MQMF 100 W 100 V Motor	79
MQMF011L1D4	MQMF 100 W 100 V Motor	79
MQMF011L1S1	MQMF 100 W 100 V Motor	79
MQMF011L1S2	MQMF 100 W 100 V Motor	79
MQMF011L1T1	MQMF 100 W 100 V Motor	79
MQMF011L1T2	MQMF 100 W 100 V Motor	79
MQMF011L1U1	MQMF 100 W 100 V Motor	79
MQMF011L1U2	MQMF 100 W 100 V Motor	79
MQMF011L1U3	MQMF 100 W 100 V Motor	79
MQMF011L1U4	MQMF 100 W 100 V Motor	79
MQMF011L1V1	MQMF 100 W 100 V Motor	79
MQMF011L1V2	MQMF 100 W 100 V Motor	79
MQMF011L1V3	MQMF 100 W 100 V Motor	79
MQMF011L1V4	MQMF 100 W 100 V Motor	79
MQMF012L1A1	MQMF 100 W 200 V Motor	80
MQMF012L1A2	MQMF 100 W 200 V Motor	80
MQMF012L1A2M	MQMF 100 W 200 V Motor	223
MQMF012L1B1	MQMF 100 W 200 V Motor	80
MQMF012L1B2	MQMF 100 W 200 V Motor	80
MQMF012L1B2M	MQMF 100 W 200 V Motor	223
MQMF012L1C1	MQMF 100 W 200 V Motor	80
MQMF012L1C2	MQMF 100 W 200 V Motor	80
MQMF012L1C2M	MQMF 100 W 200 V Motor	223
MQMF012L1C3	MQMF 100 W 200 V Motor	80
MQMF012L1C4	MQMF 100 W 200 V Motor	80
MQMF012L1C4M	MQMF 100 W 200 V Motor	223
MQMF012L1D1	MQMF 100 W 200 V Motor	80
MQMF012L1D2	MQMF 100 W 200 V Motor	80
MQMF012L1D2M	MQMF 100 W 200 V Motor	223

MQMF (Middle inertia flat type)		
Part No.	Title	Page
MQMF012L1D3	MQMF 100 W 200 V Motor	80
MQMF012L1D4	MQMF 100 W 200 V Motor	80
MQMF012L1D4M	MQMF 100 W 200 V Motor	223
MQMF012L1S1	MQMF 100 W 200 V Motor	80
MQMF012L1S2	MQMF 100 W 200 V Motor	80
MQMF012L1S2M	MQMF 100 W 200 V Motor	223
MQMF012L1T1	MQMF 100 W 200 V Motor	80
MQMF012L1T2	MQMF 100 W 200 V Motor	80
MQMF012L1T2M	MQMF 100 W 200 V Motor	223
MQMF012L1U1	MQMF 100 W 200 V Motor	80
MQMF012L1U2	MQMF 100 W 200 V Motor	80
MQMF012L1U2M	MQMF 100 W 200 V Motor	223
MQMF012L1U3	MQMF 100 W 200 V Motor	80
MQMF012L1U4	MQMF 100 W 200 V Motor	80
MQMF012L1U4M	MQMF 100 W 200 V Motor	223
MQMF012L1V1	MQMF 100 W 200 V Motor	80
MQMF012L1V2	MQMF 100 W 200 V Motor	80
MQMF012L1V2M	MQMF 100 W 200 V Motor	223
MQMF012L1V3	MQMF 100 W 200 V Motor	80
MQMF012L1V4	MQMF 100 W 200 V Motor	80
MQMF012L1V4M	MQMF 100 W 200 V Motor	223
MQMF021L1A1	MQMF 200 W 100 V Motor	81
MQMF021L1A2	MQMF 200 W 100 V Motor	81
MQMF021L1B1	MQMF 200 W 100 V Motor	81
MQMF021L1B2	MQMF 200 W 100 V Motor	81
MQMF021L1C1	MQMF 200 W 100 V Motor	81
MQMF021L1C2	MQMF 200 W 100 V Motor	81
MQMF021L1C3	MQMF 200 W 100 V Motor	81
MQMF021L1C4	MQMF 200 W 100 V Motor	81
MQMF021L1D1	MQMF 200 W 100 V Motor	81
MQMF021L1D2	MQMF 200 W 100 V Motor	81
MQMF021L1D3	MQMF 200 W 100 V Motor	81
MQMF021L1D4	MQMF 200 W 100 V Motor	81
MQMF021L1S1	MQMF 200 W 100 V Motor	81
MQMF021L1S2	MQMF 200 W 100 V Motor	81
MQMF021L1T1	MQMF 200 W 100 V Motor	81
MQMF021L1T2	MQMF 200 W 100 V Motor	81
MQMF021L1U1	MQMF 200 W 100 V Motor	81
MQMF021L1U2	MQMF 200 W 100 V Motor	81
MQMF021L1U3	MQMF 200 W 100 V Motor	81
MQMF021L1U4	MQMF 200 W 100 V Motor	81
MQMF021L1V1	MQMF 200 W 100 V Motor	81
MQMF021L1V2	MQMF 200 W 100 V Motor	81
MQMF021L1V3	MQMF 200 W 100 V Motor	81
MQMF021L1V4	MQMF 200 W 100 V Motor	81
MQMF022L1A1	MQMF 200 W 200 V Motor	82
MQMF022L1A2	MQMF 200 W 200 V Motor	82
MQMF022L1A2M	MQMF 200 W 200 V Motor	224
MQMF022L1B1	MQMF 200 W 200 V Motor	82
MQMF022L1B2	MQMF 200 W 200 V Motor	82
MQMF022L1B2M	MQMF 200 W 200 V Motor	224
MQMF022L1C1	MQMF 200 W 200 V Motor	82
MQMF022L1C2	MQMF 200 W 200 V Motor	82
MQMF022L1C2M	MQMF 200 W 200 V Motor	224
MQMF022L1C3	MQMF 200 W 200 V Motor	82
MQMF022L1C4	MQMF 200 W 200 V Motor	82
MQMF022L1C4M	MQMF 200 W 200 V Motor	224
MQMF022L1D1	MQMF 200 W 200 V Motor	82
MQMF022L1D2	MQMF 200 W 200 V Motor	82
MQMF022L1D2M	MQMF 200 W 200 V Motor	224
MQMF022L1D3	MQMF 200 W 200 V Motor	82
MQMF022L1D4	MQMF 200 W 200 V Motor	82
MQMF022L1D4M	MQMF 200 W 200 V Motor	224
MQMF022L1S1	MQMF 200 W 200 V Motor	82
MQMF022L1S2	MQMF 200 W 200 V Motor	82
MQMF022L1S2M	MQMF 200 W 200 V Motor	224
MQMF022L1T1	MQMF 200 W 200 V Motor	82
MQMF022L1T2	MQMF 200 W 200 V Motor	82
MQMF022L1T2M	MQMF 200 W 200 V Motor	224
MQMF022L1U1	MQMF 200 W 200 V Motor	82
MQMF022L1U2	MQMF 200 W 200 V Motor	82
MQMF022L1U2M	MQMF 200 W 200 V Motor	224

MQMF (Middle inertia flat type)		
Part No.	Title	Page
MQMF022L1U3	MQMF 200 W 200 V Motor	82
MQMF022L1U4	MQMF 200 W 200 V Motor	82
MQMF022L1U4M	MQMF 200 W 200 V Motor	224
MQMF022L1V1	MQMF 200 W 200 V Motor	82
MQMF022L1V2	MQMF 200 W 200 V Motor	82
MQMF022L1V2M	MQMF 200 W 200 V Motor	224
MQMF022L1V3	MQMF 200 W 200 V Motor	82
MQMF022L1V4	MQMF 200 W 200 V Motor	82
MQMF022L1V4M	MQMF 200 W 200 V Motor	224
MQMF041L1A1	MQMF 400 W 100 V Motor	83
MQMF041L1A2	MQMF 400 W 100 V Motor	83
MQMF041L1B1	MQMF 400 W 100 V Motor	83
MQMF041L1B2	MQMF 400 W 100 V Motor	83
MQMF041L1C1	MQMF 400 W 100 V Motor	83
MQMF041L1C2	MQMF 400 W 100 V Motor	83
MQMF041L1C3	MQMF 400 W 100 V Motor	83
MQMF041L1C4	MQMF 400 W 100 V Motor	83
MQMF041L1D1	MQMF 400 W 100 V Motor	83
MQMF041L1D2	MQMF 400 W 100 V Motor	83
MQMF041L1D3	MQMF 400 W 100 V Motor	83
MQMF041L1D4	MQMF 400 W 100 V Motor	83
MQMF041L1S1	MQMF 400 W 100 V Motor	83
MQMF041L1S2	MQMF 400 W 100 V Motor	83
MQMF041L1T1	MQMF 400 W 100 V Motor	83
MQMF041L1T2	MQMF 400 W 100 V Motor	83
MQMF041L1U1	MQMF 400 W 100 V Motor	83
MQMF041L1U2	MQMF 400 W 100 V Motor	83
MQMF041L1U3	MQMF 400 W 100 V Motor	83
MQMF041L1U4	MQMF 400 W 100 V Motor	83
MQMF041L1V1	MQMF 400 W 100 V Motor	83
MQMF041L1V2	MQMF 400 W 100 V Motor	83
MQMF041L1V3	MQMF 400 W 100 V Motor	83
MQMF041L1V4	MQMF 400 W 100 V Motor	83
MQMF042L1A1	MQMF 400 W 200 V Motor	84
MQMF042L1A2	MQMF 400 W 200 V Motor	84
MQMF042L1A2M	MQMF 400 W 200 V Motor	225
MQMF042L1B1	MQMF 400 W 200 V Motor	84
MQMF042L1B2	MQMF 400 W 200 V Motor	84
MQMF042L1B2M	MQMF 400 W 200 V Motor	225
MQMF042L1C1	MQMF 400 W 200 V Motor	84
MQMF042L1C2	MQMF 400 W 200 V Motor	84
MQMF042L1C2M	MQMF 400 W 200 V Motor	225
MQMF042L1C3	MQMF 400 W 200 V Motor	84
MQMF042L1C4	MQMF 400 W 200 V Motor	84
MQMF042L1C4M	MQMF 400 W 200 V Motor	225
MQMF042L1D1	MQMF 400 W 200 V Motor	84
MQMF042L1D2	MQMF 400 W 200 V Motor	84
MQMF042L1D2M	MQMF 400 W 200 V Motor	225
MQMF042L1D3	MQMF 400 W 200 V Motor	84
MQMF042L1D4	MQMF 400 W 200 V Motor	84
MQMF042L1D4M	MQMF 400 W 200 V Motor	225
MQMF042L1S1	MQMF 400 W 200 V Motor	84
MQMF042L1S2	MQMF 400 W 200 V Motor	84
MQMF042L1S2M	MQMF 400 W 200 V Motor	225
MQMF042L1T1	MQMF 400 W 200 V Motor	84
MQMF042L1T2	MQMF 400 W 200 V Motor	84
MQMF042L1T2M	MQMF 400 W 200 V Motor	225
MQMF042L1U1	MQMF 400 W 200 V Motor	84
MQMF042L1U2	MQMF 400 W 200 V Motor	84
MQMF042L1U2M	MQMF 400 W 200 V Motor	225
MQMF042L1U3	MQMF 400 W 200 V Motor	84
MQMF042L1U4	MQMF 400 W 200 V Motor	84
MQMF042L1U4M	MQMF 400 W 200 V Motor	225
MQMF042L1V1	MQMF 400 W 200 V Motor	84
MQMF042L1V2	MQMF 400 W 200 V Motor	84
MQMF042L1V2M	MQMF 400 W 200 V Motor	225
MQMF042L1V3	MQMF 400 W 200 V Motor	84
MQMF042L1V4	MQMF 400 W 200 V Motor	84
MQMF042L1V4M	MQMF 400 W 200 V Motor	225

MQMF with Gear Reducer (High inertia)		
Part No.	Title	Page
MQMF011L31N	MQMF with reduction gear 100 W 100 V Motor	294,300
MQMF011L32N	MQMF with reduction gear 100 W 100 V Motor	294,300
MQMF011L33N	MQMF with reduction gear 100 W 100 V Motor	294,300
MQMF011L34N	MQMF with reduction gear 100 W 100 V Motor	294,300
MQMF011L41N	MQMF with reduction gear 100 W 100 V Motor	294,300
MQMF011L42N	MQMF with reduction gear 100 W 100 V Motor	294,300
MQMF011L43N	MQMF with reduction gear 100 W 100 V Motor	294,300
MQMF011L44N	MQMF with reduction gear 100 W 100 V Motor	294,300
MQMF011L71N	MQMF with reduction gear 100 W 100 V Motor	294,299
MQMF011L72N	MQMF with reduction gear 100 W 100 V Motor	294,299
MQMF011L73N	MQMF with reduction gear 100 W 100 V Motor	294,299
MQMF011L74N	MQMF with reduction gear 100 W 100 V Motor	294,299
MQMF011L81N	MQMF with reduction gear 100 W 100 V Motor	294,299
MQMF011L82N	MQMF with reduction gear 100 W 100 V Motor	294,299
MQMF011L83N	MQMF with reduction gear 100 W 100 V Motor	294,299
MQMF011L84N	MQMF with reduction gear 100 W 100 V Motor	294,299
MQMF012L31N	MQMF with reduction gear 100 W 200 V Motor	294,300
MQMF012L32N	MQMF with reduction gear 100 W 200 V Motor	294,300
MQMF012L33N	MQMF with reduction gear 100 W 200 V Motor	294,300
MQMF012L34N	MQMF with reduction gear 100 W 200 V Motor	294,300
MQMF012L41N	MQMF with reduction gear 100 W 200 V Motor	294,300
MQMF012L42N	MQMF with reduction gear 100 W 200 V Motor	294,300
MQMF012L43N	MQMF with reduction gear 100 W 200 V Motor	294,300
MQMF012L44N	MQMF with reduction gear 100 W 200 V Motor	294,300
MQMF012L71N	MQMF with reduction gear 100 W 200 V Motor	294,299
MQMF012L72N	MQMF with reduction gear 100 W 200 V Motor	294,299
MQMF012L73N	MQMF with reduction gear 100 W 200 V Motor	294,299
MQMF012L74N	MQMF with reduction gear 100 W 200 V Motor	294,299
MQMF012L81N	MQMF with reduction gear 100 W 200 V Motor	294,299
MQMF012L82N	MQMF with reduction gear 100 W 200 V Motor	294,299
MQMF012L83N	MQMF with reduction gear 100 W 200 V Motor	294,299
MQMF012L84N	MQMF with reduction gear 100 W 200 V Motor	294,299
MQMF021L31N	MQMF with reduction gear 200 W 100 V Motor	294,300
MQMF021L32N	MQMF with reduction gear 200 W 100 V Motor	294,300
MQMF021L33N	MQMF with reduction gear 200 W 100 V Motor	294,300
MQMF021L34N	MQMF with reduction gear 200 W 100 V Motor	294,300
MQMF021L41N	MQMF with reduction gear 200 W 100 V Motor	294,300
MQMF021L42N	MQMF with reduction gear 200 W 100 V Motor	294,300
MQMF021L43N	MQMF with reduction gear 200 W 100 V Motor	294,300
MQMF021L44N	MQMF with reduction gear 200 W 100 V Motor	294,300
MQMF021L71N	MQMF with reduction gear 200 W 100 V Motor	294,299
MQMF021L72N	MQMF with reduction gear 200 W 100 V Motor	294,299
MQMF021L73N	MQMF with reduction gear 200 W 100 V Motor	294,299
MQMF021L74N	MQMF with reduction gear 200 W 100 V Motor	294,299
MQMF021L81N	MQMF with reduction gear 200 W 100 V Motor	294,299
MQMF021L82N	MQMF with reduction gear 200 W 100 V Motor	294,299
MQMF021L83N	MQMF with reduction gear 200 W 100 V Motor	294,299
MQMF021L84N	MQMF with reduction gear 200 W 100 V Motor	294,299
MQMF022L31N	MQMF with reduction gear 200 W 200 V Motor	294,300
MQMF022L32N	MQMF with reduction gear 200 W 200 V Motor	294,300
MQMF022L33N	MQMF with reduction gear 200 W 200 V Motor	294,300
MQMF022L34N	MQMF with reduction gear 200 W 200 V Motor	294,300
MQMF022L41N	MQMF with reduction gear 200 W 200 V Motor	294,300
MQMF022L42N	MQMF with reduction gear 200 W 200 V Motor	294,300
MQMF022L43N	MQMF with reduction gear 200 W 200 V Motor	294,300
MQMF022L44N	MQMF with reduction gear 200 W 200 V Motor	294,300
MQMF022L71N	MQMF with reduction gear 200 W 200 V Motor	294,299
MQMF022L72N	MQMF with reduction gear 200 W 200 V Motor	294,299
MQMF022L73N	MQMF with reduction gear 200 W 200 V Motor	294,299
MQMF022L74N	MQMF with reduction gear 200 W 200 V Motor	294,299
MQMF022L81N	MQMF with reduction gear 200 W 200 V Motor	294,299
MQMF022L82N	MQMF with reduction gear 200 W 200 V Motor	294,299
MQMF022L83N	MQMF with reduction gear 200 W 200 V Motor	294,299
MQMF022L84N	MQMF with reduction gear 200 W 200 V Motor	294,299
MQMF041L31N	MQMF with reduction gear 400 W 100 V Motor	294,300
MQMF041L32N	MQMF with reduction gear 400 W 100 V Motor	294,300
MQMF041L33N	MQMF with reduction gear 400 W 100 V Motor	294,300
MQMF041L34N	MQMF with reduction gear 400 W 100 V Motor	294,300
MQMF041L41N	MQMF with reduction gear 400 W 100 V Motor	294,300
MQMF041L42N	MQMF with reduction gear 400 W 100 V Motor	294,300
MQMF041L43N	MQMF with reduction gear 400 W 100 V Motor	294,300
MQMF041L44N	MQMF with reduction gear 400 W 100 V Motor	294,300

Index
(Alphabetical Order)

MQMF with Gear Reducer (High inertia)		
Part No.	Title	Page
MQMF041L71N	MQMF with reduction gear 400 W 100 V Motor	294,299
MQMF041L72N	MQMF with reduction gear 400 W 100 V Motor	294,299
MQMF041L73N	MQMF with reduction gear 400 W 100 V Motor	294,299
MQMF041L74N	MQMF with reduction gear 400 W 100 V Motor	294,299
MQMF041L81N	MQMF with reduction gear 400 W 100 V Motor	294,299
MQMF041L82N	MQMF with reduction gear 400 W 100 V Motor	294,299
MQMF041L83N	MQMF with reduction gear 400 W 100 V Motor	294,299
MQMF041L84N	MQMF with reduction gear 400 W 100 V Motor	294,299
MQMF042L31N	MQMF with reduction gear 400 W 200 V Motor	294,300
MQMF042L32N	MQMF with reduction gear 400 W 200 V Motor	294,300
MQMF042L33N	MQMF with reduction gear 400 W 200 V Motor	294,300
MQMF042L34N	MQMF with reduction gear 400 W 200 V Motor	294,300
MQMF042L41N	MQMF with reduction gear 400 W 200 V Motor	294,300
MQMF042L42N	MQMF with reduction gear 400 W 200 V Motor	294,300
MQMF042L43N	MQMF with reduction gear 400 W 200 V Motor	294,300
MQMF042L44N	MQMF with reduction gear 400 W 200 V Motor	294,300
MQMF042L71N	MQMF with reduction gear 400 W 200 V Motor	294,299
MQMF042L72N	MQMF with reduction gear 400 W 200 V Motor	294,299
MQMF042L73N	MQMF with reduction gear 400 W 200 V Motor	294,299
MQMF042L74N	MQMF with reduction gear 400 W 200 V Motor	294,299
MQMF042L81N	MQMF with reduction gear 400 W 200 V Motor	294,299
MQMF042L82N	MQMF with reduction gear 400 W 200 V Motor	294,299
MQMF042L83N	MQMF with reduction gear 400 W 200 V Motor	294,299
MQMF042L84N	MQMF with reduction gear 400 W 200 V Motor	294,299

MSMF (Low inertia)		
Part No.	Title	Page
MSMF011L1A1	MSMF 100 W 100 V Motor	65
MSMF011L1A2	MSMF 100 W 100 V Motor	65
MSMF011L1B1	MSMF 100 W 100 V Motor	65
MSMF011L1B2	MSMF 100 W 100 V Motor	65
MSMF011L1C1	MSMF 100 W 100 V Motor	65
MSMF011L1C2	MSMF 100 W 100 V Motor	65
MSMF011L1D1	MSMF 100 W 100 V Motor	65
MSMF011L1D2	MSMF 100 W 100 V Motor	65
MSMF011L1S1	MSMF 100 W 100 V Motor	65
MSMF011L1S2	MSMF 100 W 100 V Motor	65
MSMF011L1T1	MSMF 100 W 100 V Motor	65
MSMF011L1T2	MSMF 100 W 100 V Motor	65
MSMF011L1U1	MSMF 100 W 100 V Motor	65
MSMF011L1U2	MSMF 100 W 100 V Motor	65
MSMF011L1V1	MSMF 100 W 100 V Motor	65
MSMF011L1V2	MSMF 100 W 100 V Motor	65
MSMF012L1A1	MSMF 100 W 200 V Motor	66
MSMF012L1A2	MSMF 100 W 200 V Motor	66
MSMF012L1A2M	MSMF 100 W 200 V Motor	212
MSMF012L1B1	MSMF 100 W 200 V Motor	66
MSMF012L1B2	MSMF 100 W 200 V Motor	66
MSMF012L1B2M	MSMF 100 W 200 V Motor	212
MSMF012L1C1	MSMF 100 W 200 V Motor	66
MSMF012L1C2	MSMF 100 W 200 V Motor	66
MSMF012L1C2M	MSMF 100 W 200 V Motor	212
MSMF012L1D1	MSMF 100 W 200 V Motor	66
MSMF012L1D2	MSMF 100 W 200 V Motor	66
MSMF012L1D2M	MSMF 100 W 200 V Motor	212
MSMF012L1S1	MSMF 100 W 200 V Motor	66
MSMF012L1S2	MSMF 100 W 200 V Motor	66
MSMF012L1S2M	MSMF 100 W 200 V Motor	212
MSMF012L1T1	MSMF 100 W 200 V Motor	66
MSMF012L1T2	MSMF 100 W 200 V Motor	66
MSMF012L1T2M	MSMF 100 W 200 V Motor	212
MSMF012L1U1	MSMF 100 W 200 V Motor	66
MSMF012L1U2	MSMF 100 W 200 V Motor	66
MSMF012L1U2M	MSMF 100 W 200 V Motor	212
MSMF012L1V1	MSMF 100 W 200 V Motor	66
MSMF012L1V2	MSMF 100 W 200 V Motor	66
MSMF012L1V2M	MSMF 100 W 200 V Motor	212
MSMF021L1A1	MSMF 200 W 100 V Motor	67
MSMF021L1A2	MSMF 200 W 100 V Motor	67
MSMF021L1B1	MSMF 200 W 100 V Motor	67
MSMF021L1B2	MSMF 200 W 100 V Motor	67
MSMF021L1C1	MSMF 200 W 100 V Motor	67

MSMF (Low inertia)		
Part No.	Title	Page
MSMF021L1C2	MSMF 200 W 100 V Motor	67
MSMF021L1D1	MSMF 200 W 100 V Motor	67
MSMF021L1D2	MSMF 200 W 100 V Motor	67
MSMF021L1S1	MSMF 200 W 100 V Motor	67
MSMF021L1S2	MSMF 200 W 100 V Motor	67
MSMF021L1T1	MSMF 200 W 100 V Motor	67
MSMF021L1T2	MSMF 200 W 100 V Motor	67
MSMF021L1U1	MSMF 200 W 100 V Motor	67
MSMF021L1U2	MSMF 200 W 100 V Motor	67
MSMF021L1V1	MSMF 200 W 100 V Motor	67
MSMF021L1V2	MSMF 200 W 100 V Motor	67
MSMF022L1A1	MSMF 200 W 200 V Motor	68
MSMF022L1A2	MSMF 200 W 200 V Motor	68
MSMF022L1A2M	MSMF 200 W 200 V Motor	213
MSMF022L1B1	MSMF 200 W 200 V Motor	68
MSMF022L1B2	MSMF 200 W 200 V Motor	68
MSMF022L1B2M	MSMF 200 W 200 V Motor	213
MSMF022L1C1	MSMF 200 W 200 V Motor	68
MSMF022L1C2	MSMF 200 W 200 V Motor	68
MSMF022L1C2M	MSMF 200 W 200 V Motor	213
MSMF022L1D1	MSMF 200 W 200 V Motor	68
MSMF022L1D2	MSMF 200 W 200 V Motor	68
MSMF022L1D2M	MSMF 200 W 200 V Motor	213
MSMF022L1S1	MSMF 200 W 200 V Motor	68
MSMF022L1S2	MSMF 200 W 200 V Motor	68
MSMF022L1S2M	MSMF 200 W 200 V Motor	213
MSMF022L1T1	MSMF 200 W 200 V Motor	68
MSMF022L1T2	MSMF 200 W 200 V Motor	68
MSMF022L1T2M	MSMF 200 W 200 V Motor	213
MSMF022L1U1	MSMF 200 W 200 V Motor	68
MSMF022L1U2	MSMF 200 W 200 V Motor	68
MSMF022L1U2M	MSMF 200 W 200 V Motor	213
MSMF022L1V1	MSMF 200 W 200 V Motor	68
MSMF022L1V2	MSMF 200 W 200 V Motor	68
MSMF022L1V2M	MSMF 200 W 200 V Motor	213
MSMF041L1A1	MSMF 400 W 100 V Motor	69
MSMF041L1A2	MSMF 400 W 100 V Motor	69
MSMF041L1B1	MSMF 400 W 100 V Motor	69
MSMF041L1B2	MSMF 400 W 100 V Motor	69
MSMF041L1C1	MSMF 400 W 100 V Motor	69
MSMF041L1C2	MSMF 400 W 100 V Motor	69
MSMF041L1D1	MSMF 400 W 100 V Motor	69
MSMF041L1D2	MSMF 400 W 100 V Motor	69
MSMF041L1S1	MSMF 400 W 100 V Motor	69
MSMF041L1S2	MSMF 400 W 100 V Motor	69
MSMF041L1T1	MSMF 400 W 100 V Motor	69
MSMF041L1T2	MSMF 400 W 100 V Motor	69
MSMF041L1U1	MSMF 400 W 100 V Motor	69
MSMF041L1U2	MSMF 400 W 100 V Motor	69
MSMF041L1V1	MSMF 400 W 100 V Motor	69
MSMF041L1V2	MSMF 400 W 100 V Motor	69
MSMF042L1A1	MSMF 400 W 200 V Motor	70
MSMF042L1A2	MSMF 400 W 200 V Motor	70
MSMF042L1A2M	MSMF 400 W 200 V Motor	214
MSMF042L1B1	MSMF 400 W 200 V Motor	70
MSMF042L1B2	MSMF 400 W 200 V Motor	70
MSMF042L1B2M	MSMF 400 W 200 V Motor	214
MSMF042L1C1	MSMF 400 W 200 V Motor	70
MSMF042L1C2	MSMF 400 W 200 V Motor	70
MSMF042L1C2M	MSMF 400 W 200 V Motor	214
MSMF042L1D1	MSMF 400 W 200 V Motor	70
MSMF042L1D2	MSMF 400 W 200 V Motor	70
MSMF042L1D2M	MSMF 400 W 200 V Motor	214
MSMF042L1S1	MSMF 400 W 200 V Motor	70
MSMF042L1S2	MSMF 400 W 200 V Motor	70
MSMF042L1S2M	MSMF 400 W 200 V Motor	214
MSMF042L1T1	MSMF 400 W 200 V Motor	70
MSMF042L1T2	MSMF 400 W 200 V Motor	70
MSMF042L1T2M	MSMF 400 W 200 V Motor	214
MSMF042L1U1	MSMF 400 W 200 V Motor	70
MSMF042L1U2	MSMF 400 W 200 V Motor	70
MSMF042L1U2M	MSMF 400 W 200 V Motor	214

MSMF (Low inertia)		
Part No.	Title	Page
MSMF042L1V1	MSMF 400 W 200 V Motor	70
MSMF042L1V2	MSMF 400 W 200 V Motor	70
MSMF042L1V2M	MSMF 400 W 200 V Motor	214
MSMF082L1A1	MSMF 750 W 200 V Motor	71
MSMF082L1A2	MSMF 750 W 200 V Motor	71
MSMF082L1A2M	MSMF 750 W 200 V Motor	215
MSMF082L1B1	MSMF 750 W 200 V Motor	71
MSMF082L1B2	MSMF 750 W 200 V Motor	71
MSMF082L1B2M	MSMF 750 W 200 V Motor	215
MSMF082L1C1	MSMF 750 W 200 V Motor	71
MSMF082L1C2	MSMF 750 W 200 V Motor	71
MSMF082L1C2M	MSMF 750 W 200 V Motor	215
MSMF082L1D1	MSMF 750 W 200 V Motor	71
MSMF082L1D2	MSMF 750 W 200 V Motor	71
MSMF082L1D2M	MSMF 750 W 200 V Motor	215
MSMF082L1S1	MSMF 750 W 200 V Motor	71
MSMF082L1S2	MSMF 750 W 200 V Motor	71
MSMF082L1S2M	MSMF 750 W 200 V Motor	215
MSMF082L1T1	MSMF 750 W 200 V Motor	71
MSMF082L1T2	MSMF 750 W 200 V Motor	71
MSMF082L1T2M	MSMF 750 W 200 V Motor	215
MSMF082L1U1	MSMF 750 W 200 V Motor	71
MSMF082L1U2	MSMF 750 W 200 V Motor	71
MSMF082L1U2M	MSMF 750 W 200 V Motor	215
MSMF082L1V1	MSMF 750 W 200 V Motor	71
MSMF082L1V2	MSMF 750 W 200 V Motor	71
MSMF082L1V2M	MSMF 750 W 200 V Motor	215
MSMF092L1A1	MSMF 1000 W 200 V Motor	72
MSMF092L1A2	MSMF 1000 W 200 V Motor	72
MSMF092L1A2M	MSMF 1000 W 200 V Motor	216
MSMF092L1B1	MSMF 1000 W 200 V Motor	72
MSMF092L1B2	MSMF 1000 W 200 V Motor	72
MSMF092L1B2M	MSMF 1000 W 200 V Motor	216
MSMF092L1C1	MSMF 1000 W 200 V Motor	72
MSMF092L1C2	MSMF 1000 W 200 V Motor	72
MSMF092L1C2M	MSMF 1000 W 200 V Motor	216
MSMF092L1D1	MSMF 1000 W 200 V Motor	72
MSMF092L1D2	MSMF 1000 W 200 V Motor	72
MSMF092L1D2M	MSMF 1000 W 200 V Motor	216
MSMF092L1S1	MSMF 1000 W 200 V Motor	72
MSMF092L1S2	MSMF 1000 W 200 V Motor	72
MSMF092L1S2M	MSMF 1000 W 200 V Motor	216
MSMF092L1T1	MSMF 1000 W 200 V Motor	72
MSMF092L1T2	MSMF 1000 W 200 V Motor	72
MSMF092L1T2M	MSMF 1000 W 200 V Motor	216
MSMF092L1U1	MSMF 1000 W 200 V Motor	72
MSMF092L1U2	MSMF 1000 W 200 V Motor	72
MSMF092L1U2M	MSMF 1000 W 200 V Motor	216
MSMF092L1V1	MSMF 1000 W 200 V Motor	72
MSMF092L1V2	MSMF 1000 W 200 V Motor	72
MSMF092L1V2M	MSMF 1000 W 200 V Motor	216
MSMF102L1C5	MSMF 1.0 kW 200 V Motor	73
MSMF102L1C6	MSMF 1.0 kW 200 V Motor	73
MSMF102L1C6M	MSMF 1.0 kW 200 V Motor	217
MSMF102L1C7	MSMF 1.0 kW 200 V Motor	73
MSMF102L1C8	MSMF 1.0 kW 200 V Motor	73
MSMF102L1C8M	MSMF 1.0 kW 200 V Motor	217
MSMF102L1D5	MSMF 1.0 kW 200 V Motor	73
MSMF102L1D6	MSMF 1.0 kW 200 V Motor	73
MSMF102L1D6M	MSMF 1.0 kW 200 V Motor	217
MSMF102L1D7	MSMF 1.0 kW 200 V Motor	73
MSMF102L1D8	MSMF 1.0 kW 200 V Motor	73
MSMF102L1D8M	MSMF 1.0 kW 200 V Motor	217
MSMF102L1G5	MSMF 1.0 kW 200 V Motor	73
MSMF102L1G6	MSMF 1.0 kW 200 V Motor	73
MSMF102L1G6M	MSMF 1.0 kW 200 V Motor	217
MSMF102L1G7	MSMF 1.0 kW 200 V Motor	73
MSMF102L1G8	MSMF 1.0 kW 200 V Motor	73
MSMF102L1G8M	MSMF 1.0 kW 200 V Motor	217
MSMF102L1H5	MSMF 1.0 kW 200 V Motor	73
MSMF102L1H6	MSMF 1.0 kW 200 V Motor	73
MSMF102L1H6M	MSMF 1.0 kW 200 V Motor	217

MSMF (Low inertia)		
Part No.	Title	Page
MSMF102L1H7	MSMF 1.0 kW 200 V Motor	73
MSMF102L1H8	MSMF 1.0 kW 200 V Motor	73
MSMF102L1H8M	MSMF 1.0 kW 200 V Motor	217
MSMF152L1C5	MSMF 1.5 kW 200 V Motor	74
MSMF152L1C6	MSMF 1.5 kW 200 V Motor	74
MSMF152L1C6M	MSMF 1.5 kW 200 V Motor	218
MSMF152L1C7	MSMF 1.5 kW 200 V Motor	74
MSMF152L1C8	MSMF 1.5 kW 200 V Motor	74
MSMF152L1C8M	MSMF 1.5 kW 200 V Motor	218
MSMF152L1D5	MSMF 1.5 kW 200 V Motor	74
MSMF152L1D6	MSMF 1.5 kW 200 V Motor	74
MSMF152L1D6M	MSMF 1.5 kW 200 V Motor	218
MSMF152L1D7	MSMF 1.5 kW 200 V Motor	74
MSMF152L1D8	MSMF 1.5 kW 200 V Motor	74
MSMF152L1D8M	MSMF 1.5 kW 200 V Motor	218
MSMF152L1G5	MSMF 1.5 kW 200 V Motor	74
MSMF152L1G6	MSMF 1.5 kW 200 V Motor	74
MSMF152L1G6M	MSMF 1.5 kW 200 V Motor	218
MSMF152L1G7	MSMF 1.5 kW 200 V Motor	74
MSMF152L1G8	MSMF 1.5 kW 200 V Motor	74
MSMF152L1G8M	MSMF 1.5 kW 200 V Motor	218
MSMF152L1H5	MSMF 1.5 kW 200 V Motor	74
MSMF152L1H6	MSMF 1.5 kW 200 V Motor	74
MSMF152L1H6M	MSMF 1.5 kW 200 V Motor	218
MSMF152L1H7	MSMF 1.5 kW 200 V Motor	74
MSMF152L1H8	MSMF 1.5 kW 200 V Motor	74
MSMF152L1H8M	MSMF 1.5 kW 200 V Motor	218
MSMF202L1C5	MSMF 2.0 kW 200 V Motor	75
MSMF202L1C6	MSMF 2.0 kW 200 V Motor	75
MSMF202L1C6M	MSMF 2.0 kW 200 V Motor	219
MSMF202L1C7	MSMF 2.0 kW 200 V Motor	75
MSMF202L1C8	MSMF 2.0 kW 200 V Motor	75
MSMF202L1C8M	MSMF 2.0 kW 200 V Motor	219
MSMF202L1D5	MSMF 2.0 kW 200 V Motor	75
MSMF202L1D6	MSMF 2.0 kW 200 V Motor	75
MSMF202L1D6M	MSMF 2.0 kW 200 V Motor	219
MSMF202L1D7	MSMF 2.0 kW 200 V Motor	75
MSMF202L1D8	MSMF 2.0 kW 200 V Motor	75
MSMF202L1D8M	MSMF 2.0 kW 200 V Motor	219
MSMF202L1G5	MSMF 2.0 kW 200 V Motor	75
MSMF202L1G6	MSMF 2.0 kW 200 V Motor	75
MSMF202L1G6M	MSMF 2.0 kW 200 V Motor	219
MSMF202L1G7	MSMF 2.0 kW 200 V Motor	75
MSMF202L1G8	MSMF 2.0 kW 200 V Motor	75
MSMF202L1G8M	MSMF 2.0 kW 200 V Motor	219
MSMF202L1H5	MSMF 2.0 kW 200 V Motor	75
MSMF202L1H6	MSMF 2.0 kW 200 V Motor	75
MSMF202L1H6M	MSMF 2.0 kW 200 V Motor	219
MSMF202L1H7	MSMF 2.0 kW 200 V Motor	75
MSMF202L1H8	MSMF 2.0 kW 200 V Motor	75
MSMF202L1H8M	MSMF 2.0 kW 200 V Motor	219
MSMF302L1C5	MSMF 3.0 kW 200 V Motor	76
MSMF302L1C6	MSMF 3.0 kW 200 V Motor	76
MSMF302L1C6M	MSMF 3.0 kW 200 V Motor	220
MSMF302L1C7	MSMF 3.0 kW 200 V Motor	76
MSMF302L1C8	MSMF 3.0 kW 200 V Motor	76
MSMF302L1C8M	MSMF 3.0 kW 200 V Motor	220
MSMF302L1D5	MSMF 3.0 kW 200 V Motor	76
MSMF302L1D6	MSMF 3.0 kW 200 V Motor	76
MSMF302L1D6M	MSMF 3.0 kW 200 V Motor	220
MSMF302L1D7	MSMF 3.0 kW 200 V Motor	76
MSMF302L1D8	MSMF 3.0 kW 200 V Motor	76
MSMF302L1D8M	MSMF 3.0 kW 200 V Motor	220
MSMF302L1G5	MSMF 3.0 kW 200 V Motor	76
MSMF302L1G6	MSMF 3.0 kW 200 V Motor	76
MSMF302L1G6M	MSMF 3.0 kW 200 V Motor	220
MSMF302L1G7	MSMF 3.0 kW 200 V Motor	76
MSMF302L1G8	MSMF 3.0 kW 200 V Motor	76
MSMF302L1G8M	MSMF 3.0 kW 200 V Motor	220
MSMF302L1H5	MSMF 3.0 kW 200 V Motor	76
MSMF302L1H6	MSMF 3.0 kW 200 V Motor	76
MSMF302L1H6M	MSMF 3.0 kW 200 V Motor	220

Index
(Alphabetical Order)

MSMF (Low inertia)		
Part No.	Title	Page
MSMF302L1H7	MSMF 3.0 kW 200 V Motor	76
MSMF302L1H8	MSMF 3.0 kW 200 V Motor	76
MSMF302L1H8M	MSMF 3.0 kW 200 V Motor	220
MSMF402L1C5	MSMF 4.0 kW 200 V Motor	77
MSMF402L1C6	MSMF 4.0 kW 200 V Motor	77
MSMF402L1C6M	MSMF 4.0 kW 200 V Motor	221
MSMF402L1C7	MSMF 4.0 kW 200 V Motor	77
MSMF402L1C8	MSMF 4.0 kW 200 V Motor	77
MSMF402L1C8M	MSMF 4.0 kW 200 V Motor	221
MSMF402L1D5	MSMF 4.0 kW 200 V Motor	77
MSMF402L1D6	MSMF 4.0 kW 200 V Motor	77
MSMF402L1D6M	MSMF 4.0 kW 200 V Motor	221
MSMF402L1D7	MSMF 4.0 kW 200 V Motor	77
MSMF402L1D8	MSMF 4.0 kW 200 V Motor	77
MSMF402L1D8M	MSMF 4.0 kW 200 V Motor	221
MSMF402L1G5	MSMF 4.0 kW 200 V Motor	77
MSMF402L1G6	MSMF 4.0 kW 200 V Motor	77
MSMF402L1G6M	MSMF 4.0 kW 200 V Motor	221
MSMF402L1G7	MSMF 4.0 kW 200 V Motor	77
MSMF402L1G8	MSMF 4.0 kW 200 V Motor	77
MSMF402L1G8M	MSMF 4.0 kW 200 V Motor	221
MSMF402L1H5	MSMF 4.0 kW 200 V Motor	77
MSMF402L1H6	MSMF 4.0 kW 200 V Motor	77
MSMF402L1H6M	MSMF 4.0 kW 200 V Motor	221
MSMF402L1H7	MSMF 4.0 kW 200 V Motor	77
MSMF402L1H8	MSMF 4.0 kW 200 V Motor	77
MSMF402L1H8M	MSMF 4.0 kW 200 V Motor	221
MSMF502L1C5	MSMF 5.0 kW 200 V Motor	78
MSMF502L1C6	MSMF 5.0 kW 200 V Motor	78
MSMF502L1C6M	MSMF 5.0 kW 200 V Motor	222
MSMF502L1C7	MSMF 5.0 kW 200 V Motor	78
MSMF502L1C8	MSMF 5.0 kW 200 V Motor	78
MSMF502L1C8M	MSMF 5.0 kW 200 V Motor	222
MSMF502L1D5	MSMF 5.0 kW 200 V Motor	78
MSMF502L1D6	MSMF 5.0 kW 200 V Motor	78
MSMF502L1D6M	MSMF 5.0 kW 200 V Motor	222
MSMF502L1D7	MSMF 5.0 kW 200 V Motor	78
MSMF502L1D8	MSMF 5.0 kW 200 V Motor	78
MSMF502L1D8M	MSMF 5.0 kW 200 V Motor	222
MSMF502L1G5	MSMF 5.0 kW 200 V Motor	78
MSMF502L1G6	MSMF 5.0 kW 200 V Motor	78
MSMF502L1G6M	MSMF 5.0 kW 200 V Motor	222
MSMF502L1G7	MSMF 5.0 kW 200 V Motor	78
MSMF502L1G8	MSMF 5.0 kW 200 V Motor	78
MSMF502L1G8M	MSMF 5.0 kW 200 V Motor	222
MSMF502L1H5	MSMF 5.0 kW 200 V Motor	78
MSMF502L1H6	MSMF 5.0 kW 200 V Motor	78
MSMF502L1H6M	MSMF 5.0 kW 200 V Motor	222
MSMF502L1H7	MSMF 5.0 kW 200 V Motor	78
MSMF502L1H8	MSMF 5.0 kW 200 V Motor	78
MSMF502L1H8M	MSMF 5.0 kW 200 V Motor	222
MSMF5AZL1A1	MSMF 50 W 100 V/200 V common Motor	63,64
MSMF5AZL1A2	MSMF 50 W 100 V/200 V common Motor	63,64
MSMF5AZL1A2M	MSMF 50 W 100 V/200 V common Motor	211
MSMF5AZL1B1	MSMF 50 W 100 V/200 V common Motor	63,64
MSMF5AZL1B2	MSMF 50 W 100 V/200 V common Motor	63,64
MSMF5AZL1B2M	MSMF 50 W 100 V/200 V common Motor	211
MSMF5AZL1C1	MSMF 50 W 100 V/200 V common Motor	63,64
MSMF5AZL1C2	MSMF 50 W 100 V/200 V common Motor	63,64
MSMF5AZL1C2M	MSMF 50 W 100 V/200 V common Motor	211
MSMF5AZL1D1	MSMF 50 W 100 V/200 V common Motor	63,64
MSMF5AZL1D2	MSMF 50 W 100 V/200 V common Motor	63,64
MSMF5AZL1D2M	MSMF 50 W 100 V/200 V common Motor	211
MSMF5AZL1S1	MSMF 50 W 100 V/200 V common Motor	63,64
MSMF5AZL1S2	MSMF 50 W 100 V/200 V common Motor	63,64
MSMF5AZL1S2M	MSMF 50 W 100 V/200 V common Motor	211
MSMF5AZL1T1	MSMF 50 W 100 V/200 V common Motor	63,64
MSMF5AZL1T2	MSMF 50 W 100 V/200 V common Motor	63,64
MSMF5AZL1T2M	MSMF 50 W 100 V/200 V common Motor	211
MSMF5AZL1U1	MSMF 50 W 100 V/200 V common Motor	63,64
MSMF5AZL1U2	MSMF 50 W 100 V/200 V common Motor	63,64
MSMF5AZL1U2M	MSMF 50 W 100 V/200 V common Motor	211

MSMF (Low inertia)		
Part No.	Title	Page
MSMF5AZL1V1	MSMF 50 W 100 V/200 V common Motor	63,64
MSMF5AZL1V2	MSMF 50 W 100 V/200 V common Motor	63,64
MSMF5AZL1V2M	MSMF 50 W 100 V/200 V common Motor	211

MUMA (Low inertia MINAS E series Motor)		
Part No.	Title	Page
MUMA011P1S	MUMA 100 W 100 V Incremental encoder	389,393
MUMA011P1T	MUMA 100 W 100 V Incremental encoder	389,393
MUMA012P1S	MUMA 100 W 200 V Incremental encoder	391,393
MUMA012P1T	MUMA 100 W 200 V Incremental encoder	391,393
MUMA021P1S	MUMA 200 W 100 V Incremental encoder	389,393
MUMA021P1T	MUMA 200 W 100 V Incremental encoder	389,393
MUMA022P1S	MUMA 200 W 200 V Incremental encoder	391,393
MUMA022P1T	MUMA 200 W 200 V Incremental encoder	391,393
MUMA042P1S	MUMA 400 W 200 V Incremental encoder	391,393
MUMA042P1T	MUMA 400 W 200 V Incremental encoder	391,393
MUMA5AZP1S	MUMA 50 W 100 V/200 V common Incremental encoder	389,391 393
MUMA5AZP1T	MUMA 50 W 100 V/200 V common Incremental encoder	389,391 393

MUMA (MINAS E series Motor with gear reducer)		
Part No.	Title	Page
MUMA011P31N	MUMA with reduction gear 100 W 100 V Incremental encoder	394,397
MUMA011P32N		394,397
MUMA011P34N		394,397
MUMA011P41N		394,397
MUMA011P42N		394,397
MUMA011P44N		394,397
MUMA012P31N	MUMA with reduction gear 100 W 200 V Incremental encoder	394,397
MUMA012P32N		394,397
MUMA012P34N		394,397
MUMA012P41N		394,397
MUMA012P42N		394,397
MUMA012P44N		394,397
MUMA021P31N	MUMA with reduction gear 200 W 100 V Incremental encoder	394,397
MUMA021P32N		394,397
MUMA021P34N		394,397
MUMA021P41N		394,397
MUMA021P42N		394,397
MUMA021P44N		394,397
MUMA022P31N	MUMA with reduction gear 200 W 200 V Incremental encoder	394,397
MUMA022P32N		394,397
MUMA022P34N		394,397
MUMA022P41N		394,397
MUMA022P42N		394,397
MUMA022P44N		394,397
MUMA042P31N	MUMA with reduction gear 400 W 200 V Incremental encoder	394,397
MUMA042P32N		394,397
MUMA042P34N		394,397
MUMA042P41N		394,397
MUMA042P42N		394,397
MUMA042P44N		394,397

Sales Office

[Panasonic Industry Co., Ltd. Sales Office of Motors]

(November 01, 2022)

Region	Company Name [Category]	City	Address	TEL / FAX
U.S.A	Panasonic Industrial Devices Sales Company of America [Sales office]	New Jersey	Two Riverfront Plaza, 10th Floor Newark, NJ 07102-5490 U.S.A	+1-800-344-2112 / —
			Web site	http://na.industrial.panasonic.com/
Brazil	Panasonic Do Brasil Limitada [Sales office]	Sao Paulo	Avenida do Cafe, 277 Torre A-8 Andar Jabaquara ZIP Code: 04311-900 Sao Paulo SP Brazil	— / —
Germany	Panasonic Industry Europe GmbH European Headquarters [Sales office]	Munich	Caroline-Herschel-Straße 100, 85521 Ottobrunn, Germany	+49-89-45354-1000 / +49-89-45354-2111
			Web site	http://www.panasonic-electric-works.com/
France	Panasonic Electric Works Sales Western Europe B.V. [Sales office]	Verrières-Le-Buisson	10, rue des petits ruisseaux, 91370 Verrières-Le-Buisson, France	+ 33 (0) 1-60-13-5757 / + 33 (0) 1-60-13-5758
			Web site	http://www.panasonic-electric-works.fr/
Italy	Panasonic Industry Italia s.r.l. [Subsidiary]	Verona	Via del Commercio 3-5, 37012 Bussolengo-Ferlina, Italy	+39-45-6752711 / +39-45-6700444
			Web site	http://www.panasonic-electric-works.it/
Great Britain	Panasonic Electric Works UK Ltd. [Sales office]	Milton Keynes	Sunrise Parkway, Linford Wood, Milton Keynes MK14 6LF, United Kingdom	+44-1908-231-555 / +44-1908-231-599
			Web site	http://www.panasonic-electric-works.co.uk/
Austria	Panasonic Electric Industry Austria GmbH [Sales office]	Biedermannsdorf	Josef Madersperger Straße 2, 2362 Biedermannsdorf, Austria	+43-2236-26846-7 / +43-2236-46133
			Web site	http://www.panasonic-electric-works.at/
Poland	Panasonic Industry Poland [Sales office]	Warszawa	Ul. Dowborczykow 25, 90-019 Lodz, Poland	+48-422309633 / —
			Web site	http://www.panasonic-electric-works.pl/
Benelux	Panasonic Electric Works Sales Western Europe B.V. [Sales office]	PJ Best	De Rijn 4, 5684 PJ Best, Netherlands	+31(0)499-37-27-27 / +31(0)499-37-21-85
			Web site	http://www.panasonic-electric-works.nl/
Czech Republic	Panasonic Electric Works Europe AG Czech Representative Office [Sales office]	Brno	Veveri 3163/111, 61600 Brno, Czech Republic	+420-541-217-001 / +420-541-217-101
			Web site	http://www.panasonic-electric-works.cz/
Spain	Panasonic Industry Iberia S.A. [Sales office]	Madrid	Barajas Park, San Severo 20, 28042 Madrid, Spain	+34-913293875 / +34-913292976
			Web site	http://www.panasonic-electric-works.es/
Hungary	Panasonic Electric Works Europe AG Hungarian Representative Office [Sales office]	Budapest	Neumann Janos. u. 1., 1117 Budapest, Hungary	+43 2236 26846-25 / +43 2236 46133
			Web site	http://www.panasonic-electric-works.at/
Switzerland	Panasonic Industry Switzerland AG [Sales office]	Rotkreuz	Grundstraße 8, 6343 Rotkreuz ZG, Switzerland	+41(0)417997054 / +41(0)417997055
			Web site	http://www.panasonic-electric-works.ch/

Sales Office

Region	Company Name [Category]	City	Address	TEL / FAX
Turkey	Savior Kontrol Otomasyon [Distributors]	Istanbul	DES Sanayi Sitesi 102 Sk. B-06 Blok No: 6-8 34776 Yukarı Dudullu Ümraniye İstanbul Turkey	+90-216-466-3683 / +90-216-466-3685
			e-mail	info@savior.com.tr
			Web site	http://www.savior.com.tr
	BOSTEK TEKNOLOJI GELISTIRME VE ROBOT SIST.SAN.TIC.A.S [Distributors]	Izmir	10042 SOK.NO:10 A.O.S.B CIGLI-IZMIR, TURKEY	+90 232 433 8515 / +90 232 433 8881
			e-mail	sales@bostek.com.tr
			Web site	http://www.bostek.com.tr
China	Panasonic Hong Kong Co., Limited (PHK) Panasonic Industrial Devices Sales (Hong Kong) Co., Ltd. [Sales office]	Hong Kong	Level 9, Tower II, Grand Century Place, 193 Prince Edward Road West, Mongkok, Kowloon, Hong Kong	+852-2367-0181 / +852-2865-3697
	Panasonic Industry (China) Co.,Ltd. [Sales office]	Shanghai	15F, 1601-03, No.18, Lane 666, Haiyang West Road, Pudong New District, Shanghai, 200126, China	+86-21-38552000 / +86-21-38552370
			Web site	https://industrial.panasonic.com/ea/
	Panasonic Industry (China) Co.,Ltd. [Sales office]	Shenzhen	10F, Tower D, China Resources Land Building, No.19 Kefa Road, Nanshan District, Shenzhen, 518057, China	+86-755-22074488 / +86-755-22074498
			Web site	https://industrial.panasonic.com/ea/
India	Panasonic Life Solutions India Private Limited INDD - Industrial Devices Division- Sales & Marketing (Gurgaon(HQ)) [Sales office]	Delhi	12th Floor, Ambience Corporate Office, Tower-2, Ambience Island, NH-8, Gurgaon-122002, Haryana, India	+91-124-4871300 / +91-124-4751333
	Panasonic Life Solutions India Private Limited INDD - Industrial Devices Division- Sales & Marketing (Bangalore Office) [Sales office]	Bengaluru	"J.P. Chambers" 2nd Floor, #276/22-1, 46th Cross, 5th Block, Jayanagar, Bangalore - 560041	+91-124-6676-311 / —
	Panasonic Life Solutions India Private Limited INDD - Industrial Devices Division- Sales & Marketing (Mumbai Office) [Sales office]	Mumbai	502 / 503, Windfall, Sahar Plaza Complex, JB Nagar Andheri Kurla Road, Andheri (E) Mumbai - 400059, India	+91-22- 6196 8480 M: -91 9004229452 / —
	Panasonic Life Solutions India Private Limited INDD - Industrial Devices Division- Sales & Marketing (Chennai Office) [Sales office]	Chennai	Spic House Ann exe, 6th Floor, No.88, Mount Road, Guindy, Chennai - 600032, Tamilnadu	+91-44-6108-9300 / —
	Panasonic Life Solutions India Private Limited INDD - Industrial Devices Division- Sales & Marketing (Pune Office) [Sales office]	Pune	Office No. 401 & 402, Godrej Eternia, Above At Home Centre, Next to Shopper's Stop, Shivaji Nagar, Mumbai Pune Road, Pune - 411005, Maharashtra India	+91-20-67449907 / —
Korea	Panasonic Industrial Devices Sales Korea Co., Ltd. [Sales office]	Seoul	114-38 Teheran-ro, Gangnam-gu, Seoul, 06176, Korea (1004 Daechi dong, DONGIL Tower 5-6F)	+82-2-795-9600 / +82-2-2052-1053
Taiwan	Panasonic Industrial Devices Sales Taiwan Co.,Ltd. [Sales office]	Taipei	12F, No. 9, SongGao Rd. , Taipei 110, Taiwan, R.O.C	+886-2-2757-1900 / +886-2-2758-7502

Region		Company Name [Category]	City	Address	TEL / FAX
Southeast Asia		Panasonic Industry Sales Asia Pacific [Head office]	Singapore	No.3 Bedok South Road, Singapore 469269	+65-6299-9181 / +65-6390-3801
	Singapore	Intermech Machinery Pte.Ltd. [Distributors]	Singapore	2 Woodlands Sector 1 #03-25, Woodlands Spectrum 1 Singapore 738068	+65-6751-5088 / +65-6759-2122
				e-mail	sales@intermech.com.sg
				Web site	http://www.intermech.com.sg
	Malaysia	Panamech (Penang) Sdn. Bhd. [Distributors]	Penang	18, Persiaran Mahsuri 1/2, Sunway Tunas, Penang, 11900	+60-4-645-1635 / +60-4-645-1639
				e-mail	sales.pg@panamech.com.my
				Web site	http://panamech.com.my
		Caro Controls(M)Sdn.Bhd		No.23.Jalan Puteri4/1.Bander Puteri 47100 Puchong.Selangor	+603-8064-7833 / +603-8060-6733
				e-mail	sales@carlocontrols.com
				Web site	
	Thailand	Premier Automation Center Co.,Ltd. [Distributors]	Bangkok	87, Soi Lakrabang 30, Ladkrabang, Ladkrabang, Bangkok 10520	+66-2181-2299 / +66-2181-2288
				e-mail	sales@premier-ac.co.th
				Web site	http://www.premier-ac.co.th
		JW Tech Co., Ltd. [Distributors]	Bangkok	697 Soi Senavilla Village, Nawamin RD Klongchan, Bangkapi, Bangkok 10240	+66-2733-7702 / +66-2733-7703
				e-mail	info@jwtech.co.th
				Web site	http://www.jwtech.co.th
		Sang Chai Meter Co., Ltd. [Distributors]	Bangkok	888 Phaholyothin Road, Samsennai, Phayathai, Bangkok 10120	+66-2299-3333 / +66-2299-3000
				e-mail	sales@sangchaimeter.com
				Web site	https://www.sangchaimeter.com
	Indonesia	PT. Handal Yesindo Sejahtera [Distributors]	Surabaya	Jl. Raya Kutisari 8A, Surabaya 60291	+62-31-843-8844 / +62-31-841-4333
				e-mail	info@handalyesindo.com
				Web site	http://www.handalyesindo.com
		PT.Riasarana Electrindo [Distributors]	Jakarta	Jl. Prof. Dr. Latumenten Grogol Permai blok D No. 8-15 Jakarta 11460	+62-21-564-9178 / +62-21-566-7405
				Web site	http://www.risacorps.com
	Vietnam	Pavina Corporation [Distributors]	Ho Chi Minh	005 C1 Ly Thuong Kiet Blog, Vinh Vien Street, Ward 07, District 11, Ho Chi Minh	+84-8-39554457 / +84-8-39550033
				e-mail	pavina@sieuthitudong.com
				Web site	http://sieuthitudong.com
		KSMC Co., Ltd. [Distributors]	Ha Noi	A10-No 06B, HH6, Viet Hung Urban Area, Long Bien, Ha Noi	+84-4-38771700 / +84-4-38770229
				e-mail	support@ksmc.com.vn
				Web site	http://ksmc.com.vn
		Le Gio High Technology Joint Stock Company		90/2 Pha Huy Ich Sreet.Word14. Go Vap District. Ho Chi Minh City Viet Nam	+603-8064-7833 / +603-8060-6733
				e-mail	sales@carlocontrols.com
				Web site	
	Philippines	Movaflex Designs Unlimited, Inc. [Distributors]	Manila	136 Calbayog Street, Mandaluyong City, Metro Manila 1552	+28-7030-6860 / —
				e-mail	kong@levn.vn