MURR ELEKTRONIK
stay connected

MPL POWER SUPPLY 3-PHASE, SMOOTHED

IN: 400VAC+/- 5% OUT: 24V/30ADC

Art.No.: 85933
Weight: 13.32
Country of origin: CZ
Model designation: MPL 30-400/24 GESIEBT

The MPL series comprises three-phase power supplies/rectified power supply units incorporating safety isolating transformers
with protection class I and protection degree IP20 for general use in industrial applications.

Link to Product

Illustration

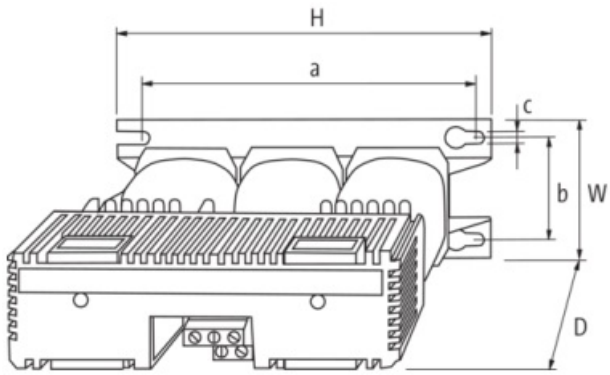

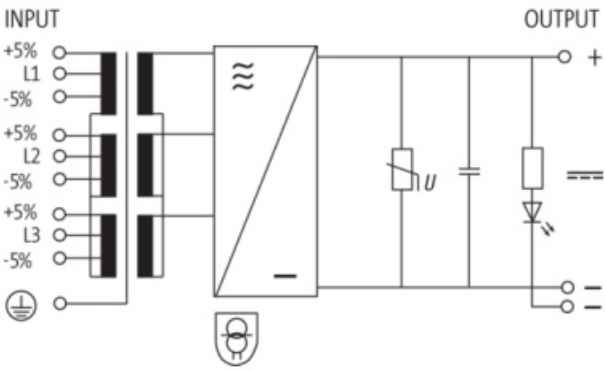

Product may differ from Image

Commercial data

EAN	4048879079198

The information in this Product-PDF has been compiled with the utmost care.
Liability for the correctness completeness and topicality of the information is restricted to gross negligence. Version: 2025-06-03