Technical data sheet
Optical distance sensor
Part no.: 50138066
ODS110L1.3/LTX-M12



For Illustration purposes only

Contents

- Technical data
- Dimensioned drawings
- Electrical connection
- Diagrams
- Operation and display
- Part number code
- Notes
- Further information
- Accessories

Technical data

Leuze

Basic data

Series	110
Application	Collision protection for transport vehicles
	Fill-level monitoring
	Length measurement in material cutting
Type of scanning system	Against object

Optical data

Beam path	Collimated
Light source	Laser, Red
Wavelength	655 nm
Laser class	1, IEC/EN 60825-1:2007
Transmitted-signal shape	Pulsed
Light spot size [at sensor distance]	5.5 mm x 7 mm [5,000 mm]
Type of light spot geometry	Oval

Measurement data

Measurement range (6 … 90 % diffuse reflection)	60 ... 3,000 mm
Measurement range (90 % diffuse reflection)	60 ... 5,000 mm
Resolution	1.0 mm
Reproducibility (1 sigma)	, see diagram
Temperature drift	2 mm/K
Standard measurement object	50 x 50 mm²
Optical distance measurement principle	Time of flight
Linearity error	30 mm

Electrical data

Protective circuit	Polarity reversal protection
	Short circuit protected

Performance data

Supply voltage U_B	18 ... 30 V, DC
Open-circuit current	60 mA

Inputs

Number of teach inputs	1 Piece(s)

Teach inputs

Voltage type	DC
Switching voltage	high: $+U_B$

Teach input 1

Assignment	Connection 1, pin 2

Outputs

Number of digital switching outputs	1 Piece(s)
IO-Link note	Two switching outputs via IO-Link process data (SSC 1 & SSC 2)

Switching outputs

Voltage type	DC

Switching output 1

Assignment	Connection 1, pin 4
Switching element	Transistor, Push-pull
Switching principle	IO-Link / light switching (PNP)/dark switching (NPN)

Time behavior

Response time	20 ms, Axial object approach / 4 ms, lateral object entry

Interface

Type	IO-Link

IO-Link

COM mode	COM2
Profile	Common Profile
Min. cycle time	COM2 = 2.7 ms
Frame type	2.2
Port type	A
Specification	V1.1
Device ID	0x00087E
SIO-mode support	Yes
Process data, length	24 bit

Connection

Number of connections	1 Piece(s)

Connection 1

Function	Signal IN
	Signal OUT
	Voltage supply
Type of connection	Connector, Turning, 90°
Thread size	M12
Type	Male
Material	Plastic
No. of pins	4 -pin
Encoding	A-coded

Mechanical data

Design	Cubic
Dimension (W x H x L)	23 mm x 50 mm x 50 mm
Housing material	Plastic
Plastic housing	ABS
Lens cover material	Plastic / PMMA
Net weight	42 g
Housing color	Red
Type of fastening	Through-hole mounting
	Via optional mounting device

Operation and display

Type of display	LED
Number of LEDs	2 Piece(s)
Operational controls	Control buttons
	PC software

Environmental data

Ambient temperature, operation	-40 ... 50 °C, UL: max. + 45 °C
Ambient temperature, storage	-40 ... 80 °C
Extraneous light protection, max.	5,000 lx

Certifications

Degree of protection	IP 67
	IP 69K
Protection class	III
Certifications	c UL US
Standards applied	IEC/EN 60947-5-2

Technical data

Customs tariff number	90318080
ECLASS 5.1.4	27270801
ECLASS 8.0	27270801
ECLASS 9.0	27270801
ECLASS 10.0	27270801
ECLASS 11.0	27270801
ECLASS 12.0	27270916
ECLASS 13.0	27270916
ETIM 5.0	EC001825
ETIM 6.0	EC001825
ETIM 7.0	EC001825
ETIM 8.0	EC001825

Dimensioned drawings

All dimensions in millimeters

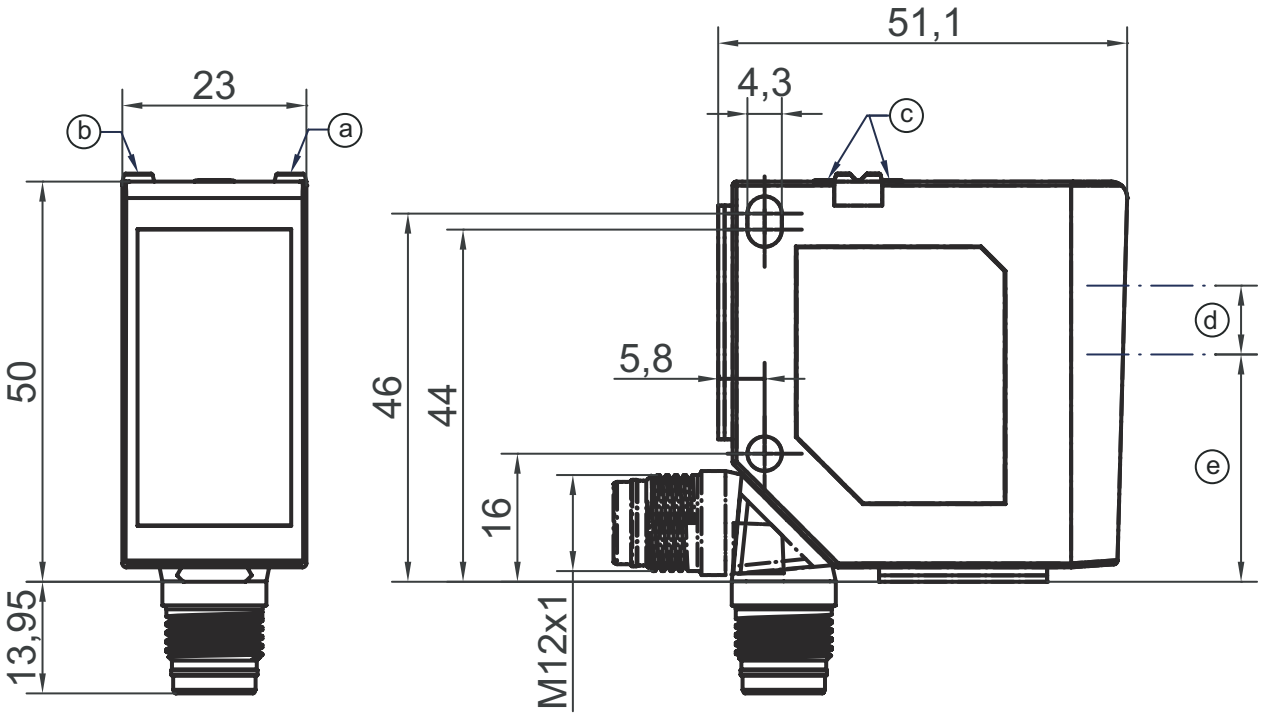

a Yellow LED
b Green LED
c Control buttons
d Transmitter
e Receiver

Electrical connection

Connection 1

Function	Signal IN
	Signal OUT
	Voltage supply
Type of connection	Connector
Thread size	M12
Type	Male
Material	Plastic
No. of pins	4 -pin
Encoding	A-coded

Pin	Pin assignment
1	18 ... 30 V DC +
2	Teach-in
3	GND
4	IO-Link / OUT 1

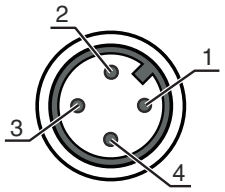

Diagrams

Repeatability (50 Hz)

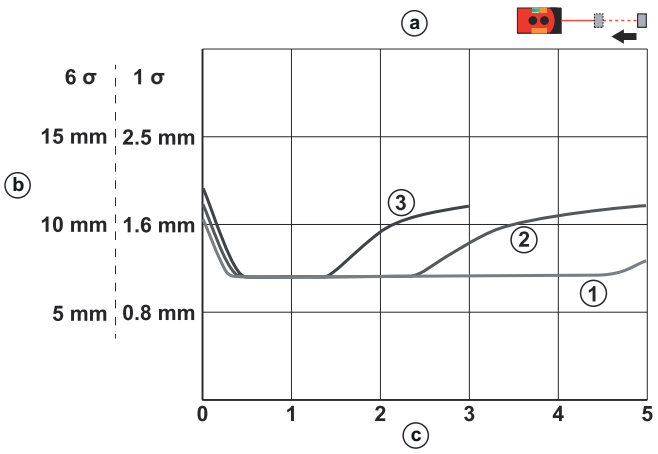

a Axial object approach
b Repeatability (50 Hz)
c Distance [m]
1 White 90%
2 Gray 18%
3 Black 6%

Repeatability (250 Hz)

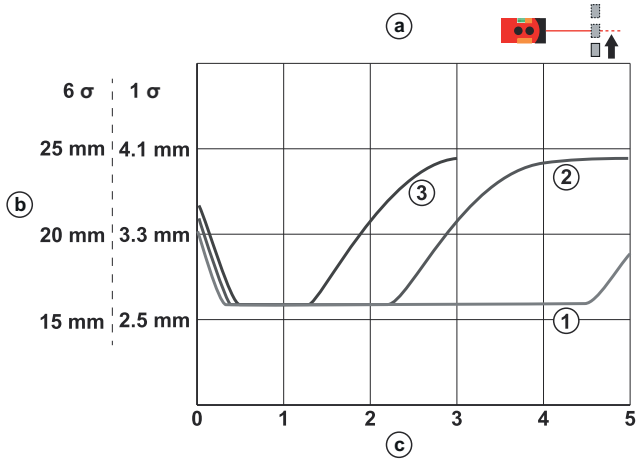

a Lateral object approach
b Repeatability (250 Hz)
c Distance [m]
1 White 90%
2 Gray 18%
3 Black 6%

Operation and display

LED	Display	Meaning
1	Yellow, continuous light	Switching output/switching state
2	Green, continuous light	Operating voltage applied
	Yellow, continuous light	Analog output status display

Part number code

Part designation: **XXX110YY.Z/ABC-DDD**

XXX110	**Operating principle** ODS110: Optical distance sensor HT110: diffuse reflection sensor with background suppression
YY	**Light source** L1: laser class 1
Z	**Equipment** 3: Control buttons for configuration
A	**Switching output/function OUT 1/IN: Pin 4 or black conductor** L: IO-Link
B	**Switching output / function OUT 2/IN: pin 2 or white conductor** 6: push-pull switching output, PNP light switching, NPN dark switching C: Current output T: teach-in V: Voltage output
C	**Switching output / function OUT 3/IN: Pin 5** X: pin not used T: teach-in
DDD	**Electrical connection** M12: M12 connector

Note

- A list with all available device types can be found on the Leuze website at www.leuze.com.

Notes

Observe intended use!

- This product is not a safety sensor and is not intended as personnel protection.
- The product may only be put into operation by competent persons.
- Only use the product in accordance with its intended use.

ATTENTION! LASER RADIATION – CLASS 1 LASER PRODUCT

- Observe the applicable statutory and local laser protection regulations.

Notes

	WARNING! LASER RADIATION – CLASS 1 LASER PRODUCT
	The device satisfies the requirements of IEC 60825-1:2007 (EN 60825-1:2007) safety regulations for a product of **laser class 1** as well as the U.S. 21 CFR 1040.10 regulations with deviations corresponding to Laser Notice No. 50 from June 24, 2007. Observe the applicable statutory and local laser protection regulations. The device must not be tampered with and must not be changed in any way. There are no user-serviceable parts inside the device. Repairs must only be performed by Leuze electronic GmbH + Co. KG.

Further information

- Ambient temperature, operation: UL: max. +45°
- Warmup time: minimum 20 min at +24 VDC and an ambient temperature of 20 °C
- Response time: depending on the entry direction of the object to be measured

Accessories

Connection technology - Connection unit

	Part no.	Designation	Article	Description
	50144900	MD 798i-11-82/L5-2222	Distribution box	Type: IO-Link master Current consumption, max.: 11,000 mA Switching outputs for each sensor connection: 1 Piece(s) Switching output: Transistor, PNP Interface: IO-Link, Automatic protocol detection, EtherNet IP, Modbus TCP, PROFINET Connections: 12 Piece(s) Sensor connections: 8 Piece(s) Connections for voltage supply: 2 Piece(s) Interface connections: 2 Piece(s) Degree of protection: IP 67, IP 65, IP 69K

Connection technology - Connection cables

	Part no.	Designation	Article	Description
	50130654	KD U-M12-4A-P1-020	Connection cable	Connection 1: Connector, M12, Axial, Female, A-coded, 4 -pin Connector, LED: No Connection 2: Open end Shielded: No Cable length: 2.000 mm Sheathing material: PUR
	50130657	KD U-M12-4A-P1-050	Connection cable	Connection 1: Connector, M12, Axial, Female, A-coded, 4 -pin Connector, LED: No Connection 2: Open end Shielded: No Cable length: 5.000 mm Sheathing material: PUR

Accessories

	Part no.	Designation	Article	Description
	50130648	KD U-M12-4A-V1-020	Connection cable	Connection 1: Connector, M12, Axial, Female, A-coded, 4 -pin Connector, LED: No Connection 2: Open end Shielded: No Cable length: 2.000 mm Sheathing material: PVC
	50130652	KD U-M12-4A-V1-050	Connection cable	Connection 1: Connector, M12, Axial, Female, A-coded, 4 -pin Connector, LED: No Connection 2: Open end Shielded: No Cable length: 5.000 mm Sheathing material: PVC

Mounting technology - Mounting brackets

	Part no.	Designation	Article	Description
	50118543	BT 300M.5	Mounting bracket	Design of mounting device: Angle, L-shape Fastening, at system: Through-hole mounting Mounting bracket, at device: Screw type, Suited for M4 screws Type of mounting device: Adjustable Material: Stainless steel

Note



A list with all available accessories can be found on the Leuze website in the Download tab of the article detailed page.