http://www.delta.com.tw/industrialautomation/

2020/12/02

DTB Series Temperature Controller

Instruction Sheet

Thank you very much for purchasing DELTA B Series. Please read this instruction sheet before using your B series to ensure proper operation and please keep this instruction sheet handy for quick reference.

■ Precaution

⚠ **DANGER! Caution! Electric Shock!**

1. Do not touch the AC terminals while the power is supplied to the controller to prevent an electric shock.
2. Make sure power is disconnected while checking the unit inside.
3. The symbol ⧈ indicates that this Delta B Series Temperature Controller is protected throughout by DOUBLE INSULATION or REINFORCED INSULATION (equivalent to Class II of IEC 536).

⚠ **WARNING!**

This controller is an open-type temperature controller. Make sure to evaluate any dangerous application in which a serious human injury or serious property damage may occur.

1. Always use recommended solder-less terminals: Fork terminal with isolation (M3 screw, width is 7.0mm (6.0mm for DTB 4824), hole diameter 3.2mm). Screw size: M3 x 6.5 (With 6.8 x 6.8 square washer). Screw size for DTB4824: M3 x 4.5 (With 6.0 x 6.0 square washer). Recommended tightening torque: 0.4 N.m (4kgf.cm). Applicable wire: Solid/twisted wire of 2 mm^2, 12AWG to 24AWG. Please be sure to tighten them properly.
2. Do not allow dust or foreign objects to fall inside the controller to prevent it from malfunctioning.
3. Never modify or disassemble the controller.
4. Do not connect anything to the “No used” terminals.
5. Make sure all wires are connected to the correct polarity of terminals.
6. Do not install and/or use the controller in places subject to:

   Dust or corrosive gases and liquid High humidity and high radiation Vibration and shock High voltage and high frequency
7. Must turn power off when wiring and changing a temperature sensor.
8. Be sure to use compensating wires that match the thermocouple types when extending or connecting the thermocouple wires.
9. Please use wires with resistance when extending or connecting a platinum resistance thermometer (RTD).
10. Please keep the wire as short as possible when wiring a platinum resistance thermometer (RTD) to the controller and please route power wires as far as possible from load wires to prevent interference and induced noise.
11. This controller is an open-type unit and must be placed in an enclosure away from high temperature, humidity, dripping water, corrosive materials, airborne dust and electric shock or vibration.
12. Please make sure power cables and signals from instruments are all installed properly before energizing the controller, otherwise serious damage may occur.
13. Please do not touch the terminals in the controller or try to repair the controller when power is applied to prevent an electric shock.
14. Wait at least one minute after power is disconnected to allow capacitors to discharge, and please do not touch any internal circuit within this period.
15. Do not use acid or alkaline liquids for cleaning. Please use a soft, dry cloth to clean the controller.
16. This instrument is not furnished with a power switch or fuse. Therefore, if a fuse or power switch is required, install the protection close to the instrument. Recommended fuse rating: Rated voltage 250 V, Rated current 1 A. Fuse type: Time-lag fuse
17. This controller does not provide overcurrent protection. Use of this product requires that suitable overcurrent protection device(s) must be added to ensure compliance with all relevant electrical standards and codes. (Rated 250 V, 15 Amps max). A suitable disconnecting device should be provided near the controller in the end-use installation.

■ Display, LED & Pushbuttons



PV: Present value
SV: Set value
AT: Auto-tuning LED
OUT1/OUT2: Output LED
SET : Select & setup keys
C, F: Celsius & Fahrenheit LED
ALM1 ~ ALM3: Alarm output LED
: Digit adjustment keys

■ Ordering Information

DTB 1234 56 7-8

DTB Series	DTB: Delta B Series Temperature Controller	
1234 Panel size (W×H)	4824: 1/32 DIN W48 × H24mm 4848: 1/16 DIN W48 × H48mm	4896: 1/8 DIN W48 × H96mm 9696: 1/4 DIN W96 × H96mm
5 1st output group selection	R: Relay output, SPDT (SPST: 1/16 DIN and 1/32 DIN size), 250VAC, 5A V: Voltage pulse output, 14V +10% ~ -20% (Max. 40mA) C: DC current output , 4 ~ 20mA L: Linear voltage output, 0 ~ 10VDC	
6 2nd output group selection	R: Relay output, SPDT (SPST: 1/16 DIN and 1/32 DIN size), 250VAC, 5A V: Voltage pulse output, 14V +10% ~ -20% (Max. 40mA)	
7 EVENT inputs / CT function (optional)	None: No EVENT input , No CT (Current transformer) E: EVENT input is provided, No CT (Current transformer)	T: CT (Current transformer) is provided, No EVENT input V: Valve control
8 Power supply	None: AC 100 ~ 240V; D: DC24V	

Note 1: DTB4824 series: no optional function provided and no extra alarm output supported, but user can set 2nd output as alarm mode.
Note 2: DTB4848 series: only one alarm output when optional function supported, but user can set 2nd output as 2nd alarm output.
Note 3: “Valve control” with feedback selection is only available for DTB4896RRV, DTB9696RRV.

■ Specifications

Input voltage	AC100 ~ 240V, 50/60Hz; DC24V±10%
Operation voltage rrange	Rated voltage: AC 85% ~ 110%; DC 90 ~ 110%
Power consumption	5VA max.
Memory Protection	EEPROM 4K bit (non-volatile memory (number of writes: 100,000)
Display method	2 line x 4 character 7-segment LED display Process value (PV): Red color, Set point (SV): Green color
Sensor type	Thermocouple: K, J, T, E, N, R, S, B, L, U, TXK
	3-wire Platinum RTD: Pt100, JPt100
	Analog input: 0 ~ 5V, 0 ~ 10V, 0 ~ 20 m A, 4 ~ 20 m A, 0 ~ 50mV
Control mode	PID, ON/OFF, Manual or PID program control (Ramp/Soak control)
Control output	Relay output: SPDT (SPST: 1/16 DIN and 1/32 DIN size), Max. load 250VAC, 5A resistive load
	Voltage pulse output: DC 14V, Max. output current 40mA
	Current output: DC 4 ~ 20m A output (Load resistance: Max. 600Ω)
	Linear voltage output: 0 ~ 10V
Display accuracy	0 or 1 digit to the right of the decimal point (selectable)
Sampling rate	Analog input: 150 msec/ per scan Thermocouple or Platinum RTD: 400 msec/per scan
RS-485 communication	MODBUS ASCII / RTU communication protocol
Vibration resistance	10 to 55Hz, 10m/s^2 for 10min, each in X, Y and Z directions
Shock resistance	Max. 300m/ s^2, 3 times in each 3 axes, 6 directions
Ambient temperature	0°C ~ +50°C
Storage temperature	-20°C ~ +65°C
Altitude	2,000m or less
Relative humidity	35% ~ 80% (non-condensing)
Panel protection level	IP65

■ Temperature Sensor Type & Temperature Range

Input Temperature Sensor Type	Register Value	LED Display	Temperature Range
0 ~ 50mV Analog Input	17		-999 ~ 9,999

Input Temperature Sensor Type	Register Value	LED Display	Temperature Range
4 ~ 20mA Analog Input	16		-999 ~ 9,999
0 ~ 20mA Analog Input	15		-999 ~ 9,999
0V ~ 10V Analog Input	14		-999 ~ 9,999
0V ~ 5V Analog Input	13		-999 ~ 9,999
Platinum Resistance (Pt100)	12		-200 ~ 600ºC
Platinum Resistance (JPt100)	11		-20 ~ 400ºC
Thermocouple TXK type	10		-200 ~ 800ºC
Thermocouple U type	9		-200 ~ 500ºC
Thermocouple L type	8		-200 ~ 850ºC
Thermocouple B type	7		100 ~ 1,800ºC
Thermocouple S type	6		0 ~ 1,700ºC
Thermocouple R type	5		0 ~ 1,700ºC
Thermocouple N type	4		-200 ~ 1,300ºC
Thermocouple E type	3		0 ~ 600ºC
Thermocouple T type	2		-200 ~ 400ºC
Thermocouple J type	1		-100 ~ 1,200ºC
Thermocouple K type	0		-200 ~ 1,300ºC

Note 1: An internal 249Ω precision resistor for the current input is built-in, please refer to the item “How To Set Up Current Input”.

Note 2: (Operation mode) must be set if user wishes to specify decimal point position. Except for the thermocouple B, S, R type, the decimal point positions of all the other thermocouple type input sensors can be set.

The default range of analog input is -999 ~ 9,999. For example, when a 0 ~ 20mA analog input is selected as the input temperature sensor type, -999 indicates 0mA and 9,999 indicates 20mA. If change the input range to 0 ~ 2,000, then 0 indicates 0mA and 2,000 indicates 20mA. One display scale is equal to 0.01mA.

■ Operation

There are three modes of operation: operation, regulation and initial setting. When power is applied, controller gets into the operation mode. Press the SET key to switch to regulation mode. If the SET key is pressed for more than 3 seconds, controller will switch to the initial setting mode. Pressing the SET key while in the regulation mode or initial setting mode, forces the controller to return to the operation mode.

PV/SV: Sets the temperature set point and displays the temperature process value. Use ∨ ∧ keys to set the temperature set point.

Setting method: While in any function mode, press the key to select the desired function and use the ∨ ∧ keys to change settings.

Press SET key to save the changes. The next flow chart shows how to switch for settings and internal functions:



Regulation Mode	Operation Mode	Initial Setting Mode
Auto-tuning (Set PID control and RUN mode) Press	Use ∨ ∧ key to set temperature set Press	Set input type Press
4 groups PID modes (n=0~3). When n=4, PID control is auto regulated. Press	Control setting RUN or STOP Press	Set temperature unit (Not display when in analog input) Press

Regulation Mode	Operation Mode	Initial Setting Mode
PdoF PD control offset setting (When PID control is ON and Ti=0, set the value of PdoF.) Press	Ptrn Start pattern setting (PID program control and PSTP Time setting. Press	tP-H Set upper-limit of temperature range Press
HtS Heating hysteresis setting (Set in ON/OFF control mode) Press	SP Decimal point position selection (except for B, S, R type, all the other types can be set) Press	tP-L Set lower-limit of temperature range Press
CtS Cooling hysteresis setting (Set in ON/OFF control mode) Press	AL1H Upper-limit alarm 1 (This parameter is available only when ALA1 function is enabled.) Press	CtrL Select control mode (See “Pattern and Set Editing Selection” for detail) Press
HtPd or CtPd Heating/Cooling control cycle setting (Set in PID control mode) Press	AL1L Lower-limit alarm 1 (This parameter is available only when ALA1 function is enabled.) Press	S-HC Select heating/cooling control or dual loop output control Press
HCPd Control cycle setting of 2nd output group (Set in PID control and Dual Loop output control mode) Press	AL2H Upper-limit alarm 2 (This parameter is available only when ALA2 function is enabled.) Press	ALA1 Alarm 1 mode setting Press
CoEF P value of 1st & 2nd output group during dual loop output control P value of 2nd output group=(P value of 1st output group x COEF Press	AL2L Lower-limit alarm 2 (This parameter is available only when ALA2 function is enabled.) Press	ALA2 Alarm 2 mode setting Press
dEAd Deadband (Set in Dual Loop output control mode) Press	AL3H Upper-limit alarm 3 (This parameter is available only when ALA3 function is enabled.) Press	ALA3 Alarm 3 mode setting Press
u-Fb Switch setting for feedback signal of value (Displayed with valve control is ON) Press	AL3L Lower-limit alarm 3 (This parameter is available only when ALA3 function is enabled.) Press	SALA Set system alarm Press
u-At Automatically regulate feedback value (Displayed when valve control is ON) Press	LoC Setting lock mode Press	CoSH Enable/disable communication write function Press
uAtr Time setting for valve from full close to full open (Displayed when valve control is ON) Press	oUt1 Display and adjust output value of 1st output group (Display in PID control mode and manual RUN mode) Press	C-SL ASCII, RTU communication formats selection Press
u-dE Valve Deadband setting (Displayed when valve control is ON) Press	oUt2 Display and adjust output value of 2nd output group (Display in dual loop PID control mode and manual RUN mode) Press	C-no Communication address setting Press

Regulation Mode	Operation Mode	Initial Setting Mode
u-HC Upper-limit regulation of valve output with feedback to controller (Display when valve signal feedback function is ON) Press	CT In case of using an external CT, the controller displays the current value being measured by CT, if the control output is ON Press to return to set target temperature	bPS Communication baud rate setting Press
u-Lo Lower-limit regulation of valve output with feedback to controller (Display when valve signal feedback function is ON) Press	FoUt Valve output with feedback (Display when valve feedback function is ON) Press	LEn Data length setting Press
tPoF Regulate temperature deviation value Press	uP DA value feedback of valve (Display when valve feedback function is ON) Press back to target temperature	PrtY Parity bit setting Press
CrHC Regulate upper-limit of analog output value (The setting is displayed when in analog output) Press		StoP Stop bit setting Press to return to input type setting
CrLo Regulate lower-limit of analog output value (The setting is displayed when in analog output) Press to return to auto-tuning mode		

1 Scale = 2.8uA = 1.3mV for tuning output value

PID mode selection: any one of 4 groups PID modes (n = 0 ~ 3) can be selected. When n = 4, program will automatically select 1 group PID that is most useful for target temperature.

Pidn Seletc n=0~4 to decide PID mode Press 0~3 groups of PID	Su0 PID setting: n=0 Press	Su3 PID setting: n=3 Press
	P0 Proportion band setting: n=0 Press	P3 Proportion band setting: n=3 Press
	I0 Ti setting: n=0 Press	I3 Ti setting: n=3 Press
	d0 Td setting: n=0 Press	d3 Td setting: n=3 Press
	CoF0 Integral deviation setting: n=0 AT setting. Press back to PID deviation setting	CoF3 Integral deviation setting: n=3 AT setting. Press back to PID deviation setting

Pattern and step editing selection: edit ProG in Ctrl parameter. The following display is the example operation of pattern No. 0.

PAtn Select desired editing pattern number. Select OFF Press select number	SP00 Edit temperature of step No.0 of pattern No.0 Press	PSt0 Select actual step No. when program control is executing Press
Exit pattern and step editing selection Switch to S-HC and continue to set.	tI00 Edit time of step No.0 of pattern No.0. Unit: hh.mm Press	CyC0 Set additional execution cycle number (0~99) Press
	Set step No. 07 in order	LInO Set link pattern. OFF indicates the program end.
	SP07 Edit temperature of step No.7 of pattern No.0 Press	
	tI07 Edit time of step No.7 of pattern No.0 Unit: hh.mm Press to set actual step No.	Press to return to pattern No. editing mode

■ Dual Loop Output Control (Heating/Cooling Control)

Temperature control can be achieved either by heating or cooling. In DTB series, heating and cooling can be operated simultaneously (Dual Loop output control) to perform temperature control. When Dual Loop output control are used, two control outputs must be connected to the heating and cooling devices. Please refer to the following for the operation:

S-HC: This parameter is used to select heating or cooling action if operate either heating or cooling function in this controller. When selecting HEAt, 1st output group is heating (reverse) control, and when selecting Cool, 1st output group is cooling (forward) control. At this moment, 2nd output group is regarded as an alarm output. If user select H1C2 or C1H2, it indicates that user can operate Dual Loop output control function in this controller. When selecting H1C2, 1st output group is heating (reverse) control and 2nd output group is cooling (forward) control. When selecting C1H2, 1st output group is cooling (forward) control and 2nd output group is heating (reverse) control.
In DTB series, P (Proportional Band), I(Integral Time) and D(Derivative Time) parameters are automatically set by using the Auto-tuning (AT) function.

CoEF: This parameter is for the control mode that must be Dual Loop output control with PID control method configured. The value of P, I and D of 1st output group can be set immediately. The P value of 2nd output group is equal to (P value of 1st output group) x CoEF and the value of I and D of 2nd output group are the same as the value of I and D of 1st output group.

dEAd: Dead Band, shown as the following figure 1, 2 and 3. This parameter sets an area in which the heating and cooling control output is 0 centering around the set point in a Dual Loop output control mode.

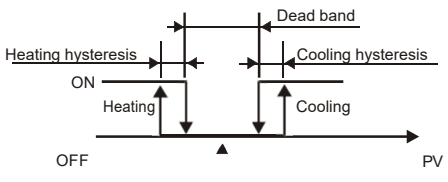

Figure 1. Output operation of ON/OFF control during dual loop output control

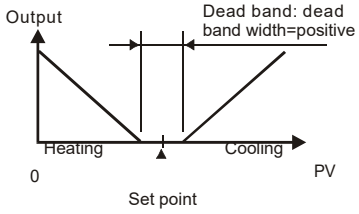

Figure 2. PID control, Dead Band is positive

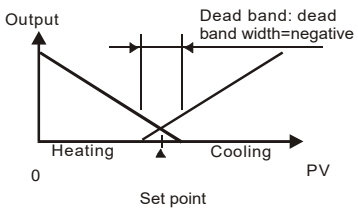

Figure 3. PID control, Dead Band is negative

LoC: **Settings lock.** To avoid incorrect operation, two key lock functions are provided.

LoC1: Lock 1 can lock all settings. All parameters and temperature settings can be locked to disable changes.

LoC2: Lock 2 can lock settings except the SV (Set point) value. All parameters and temperature settings can be locked with the exception of the SV value. Press SET and ↺ key simultaneously, the "Lock" status can be released.

■ Alarm Outputs

There are up to three groups of alarm outputs and each group allows eighteen alarm types in the initial setting mode. The alarm output is activated whenever the process temperature value (PV) is getting higher or lower than the set point of alarm limit.

Set value	Alarm Type	Alarm output operation
0	Alarm function disabled	Output is OFF
1	Deviation upper- and lower-limit: This alarm output operates when PV value is higher than the setting value SV+(AL-H) or lower than the setting value SV-(AL-L).	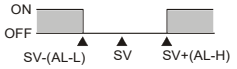
2	Deviation upper-limit: This alarm output operates when PV value is higher than the setting value SV+(AL-H).	
3	Deviation lower-limit: This alarm output operates when PV value is lower than the setting value SV-(AL-L).	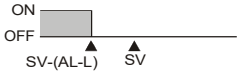
4	Reverse deviation upper- and lower-limit: This alarm output operates when PV value is in the range of the setting value SV+(AL-H) and the setting value SV-(AL-L).	
5	Absolute value upper- and lower-limit: This alarm output operates when PV value is higher than the setting value AL-H or lower than the setting value AL-L.	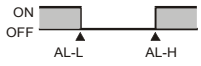
6	Absolute value upper-limit: This alarm output operates when PV value is higher than the setting value AL-H.	

Set value	Alarm Type	Alarm output operation
7	Absolute value lower-limit: This alarm output operates when PV value is lower than the setting value AL-L.	
8	Deviation upper- and lower-limit with standby sequence: This alarm output operates when PV value reaches set point (SV value) and the value is higher than the setting value SV+(AL-H) or lower than the setting value SV-(AL-L).	
9	Deviation upper-limit with standby sequence: This alarm output operates when PV value reaches set point (SV value) and the reached value is higher than the setting value SV+(AL-H).	
10	Deviation lower-limit with standby sequence: This alarm output operates when PV value reaches the set point (SV value) and the reached value is lower than the setting value SV-(AL-L).	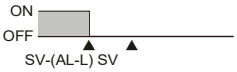
11	Hysteresis upper-limit alarm output: This alarm output operates if PV value is higher than the setting value SV+(AL-H). This alarm output is OFF when PV value is lower than the setting value SV+(AL-L).	
12	Hysteresis lower-limit alarm output: This alarm output operates if PV value is lower than the setting value SV-(AL-H). This alarm output is OFF when PV value is higher than the setting value SV-(AL-L).	
13	CT alarm output: This alarm operates when the current measured by transformer (CT) is lower than AL-L or higher than AL-H (This alarm output is available only for the controller with current transformer).	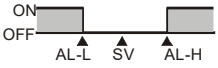
14	When program control is end status, alarm output is ON.	
15	When RAMP UP status happens to PID program control, alarm output is ON.	
16	When RAMP DOWN status happens to PID program control, alarm output is ON.	
17	When SOAK status happens to PID program control, alarm output is ON.	
18	When RUN status happens to PID program control, alarm output is ON.	

Note: AL-H and AL-L include AL1H, AL2H, AL3H and AL1L, AL2L, AL3L

■ Current Transformer (CT) Function

The Current Transformer (CT) function is used with the alarm output. When using a current transformer (CT) with the controller, change the corresponding alarm output mode to mode 13 (alarm output set value is 13), then turn to operation mode and set the current lower-limit and current upper-limit. You can set current alarm range between 0.5A ~ 30A, display resolution is 0.1A and measure accuracy is +/- 0.5A.

■ EVENT Inputs Function

There are two optional event inputs (contact inputs) supported (EVENT1and EVENT2) in DTB series.

EVENT1 : RUN/STOP operation can be executed by RUN/STOP parameters (Operation Mode) or via the communication. User also can control RUN/STOP operation by EVENT 1 in DTB series. The control output is ON if the circuit of EVENT 1 is open when the controller is operating. Otherwise, the controller will stop output if the circuit of EVENT 1 is short or when the system parameter of the controller is set to STOP mode.

EVENT2 : DTB series allows user can switch two temperature setting value by changing the status (open/short) of EVENT 2. Each temperature setting value has independent control parameters.

■ PID Program Control (Ramp/Soak Program Control)

Description of Function and Parameters Setting:

PID program control by 8 patterns (Pattern No. 0~7) is supported in DTB series. Each pattern contains 8 steps (step No. 0 ~ 7), one Link Pattern parameter, one Cycle parameter and one Actual Step parameter.

Start Pattern : PtrN is in operation mode and it is used to set the Start Pattern of PID program control (This parameter appear in PSEP mode only).

Steps : Include set point X and execution time T, these two parameters setting. The set point (SV) should reach temperature X after the period of execution time T. If the set point is the same as the result of the previous setting, then it is called Soak program control. If not, then it is called Ramp program control. Therefore, PID program control is also called Ramp/Soak program control.

The default of step No. 0 in this controller is Soak program control. The controller will control the temperature (PV) to reach the set point X and then keep the temperature at set point X. The period of execution time is time T which provided by step No. 0.

Link Pattern Parameter : For example, when set LinK to 2, it indicates that pattern No. 2 will execute next after the execution of pattern No. 0. If set to oFF, it indicates the program will stop after executing the current pattern and the temperature will keep at the set point of

the last step.

Cycle Parameter : Additional execution cycle number. For example, when set CYCY to 2, it indicates that pattern No. 4 should execute twice in addition. Include origin one time execution, total execute three times.

Actual Step Parameter : Execution step number per pattern (can set to 0 ~ 7). For example, when set PSY3 to 2, it indicates that pattern No 7 will not execute other steps than step 0 to step2.

Execution : When r-S is set to rUn, the program will start to execute in order from the step 0 of start pattern.

When r-S is set to StoP, the program will stop and the control output is disabled.

When r-S is set to PStP, the program will stop and the temperature at that time will be controlled at the set point before program stop. Select rUn again, then the program will restart and execute from step 0 of start pattern.

When r-S is set to PAod, the program will hold and the temperature at that time will be controlled at the set point before program hold. Select rUn again, then the program will follow the step before hold and start to execute through the rest of the time.

Display : During PID program control, the SV default display is P-XX, P indicates the current execution pattern and XX indicates the current execution step. Press ▽△ to change the display item.

After select SP, press SET key, and then the temperature set point of the current execution step will display on SV display.

After select r-tC, press SET key, and then the residual time of the current execution step will display on SV display.

■ PID Control

One group can be selected from any one of 4 groups PID parameters (P, I, D, IOF) for PID control. After AT, PID value and temperature setting will be stored in the selected one group.

Pn0 ~ Pn4: PIDn, n = 0 ~ 4 from which 0 ~ 3 correspond to each PID parameter. Pn4: n = 4, auto PID parameter. Program will automatically select a most useful PID parameter based on current temperature setting. Displayed SV values correspond to Sv0 ~ Sv3

Sv0 ~ Sv3: Temperature setting corresponded to the selected PID parameter via user-defined or AT.

Valve Control:

When use valve control as output control, there are 2 Relay outputs for motor forward/reverse control, one (output 1) for valve open the other (output 2) for valve close. The output volume is controlled by valve open/close and it can be set with feedback function enabled or disabled. When feedback is disabled, output 1 will keep output while valve fully opens and output 2 will keep output while valve fully closes. But if feedback is enabled, please follow the parameter setting for valve control as follows:

uAtr: Time for valve from full close to full open.

u-dE: Dead Band setting of valve. The value of current valve output minus previous one must be greater than Dead Band value; otherwise, valve will remain OFF.

u-Fb: Signal feedback setting, ON for enabling feedback and OFF for disabling feedback.

When u-Fb set to " 1", it means signal feedback function is activated and will come up selections as follows:

u-AE: Upper/Lower limit of valve feedback by auto-tuning. r-S must set to StoP for showing up this selection.

u-Hc: D/A value when value fully opens. Set u-AE to be "1" for auto setting or "0" for manual setting.

u-Lo: D/A value when value fully closes. Set u-AE to be "1" for auto setting or "0" for manual setting.

Note: If feedback function setting is with problem, program will see the setting as feedback disabled.

■ RS-485 Communication

1. Supporting transmission speed: 2,400, 4,800, 9,600, 19,200, 38,400bps
2. Non-supported formats: 7, N, 1 or 8, O, 2 or 8, E, 2
3. Communication protocol: Modbus (ASCII or RTU)
4. Function code: 03H to read the contents of register (Max. 8 words). 06H to write 1 (one) word into register. 02H to read the bits data (Max. 16 bits). 05H to write 1 (one) bit into register.
5. Address and Content of Data Register:

Address	Content	Explanation
1000H	Process value (PV)	Measuring unit is 0.1, updated one time in 0.4 second
		The following reading value display indicates error occurs:
		8002H : Initial process (Temperature value is not got yet)
		8003H : Temperature sensor is not connected
		8004H : Temperature sensor input error

Address	Content	Explanation
		8006H : Cannot get temperature value, ADC input error
		8007H : Memory read/write error
1001H	Set point (SV)	Unit is 0.1, ºC or ºF
1002H	Upper-limit of temperature range	The data content should not be higher than the temperature range
1003H	Lower-limit of temperature range	The data content should not be lower than the temperature range
1004H	Input temperature sensor type	Please refer to the contents of the “Temperature Sensor Type and Temperature Range” for detail
1005H	Control method	0: PID, 1: ON/OFF, 2: manual tuning, 3: PID grogram control
1006H	Heating/Cooling control selection	0: Heating, 1: Cooling, 2: Heating/Cooling, 3: Cooling/Heating
1007H	1st group of Heating/Cooling control cycle	0 ~ 99, 0:0.5 sec
1008H	2nd group of Heating/Cooling control cycle	0 ~ 99, 0:0.5 sec
1009H	PB Proportional band	0.1 ~ 999.9
100AH	Ti Integral time	0 ~ 9,999
100BH	Td Derivative time	0 ~ 9,999
100CH	Integration default	0 ~ 100%, unit is 0.1%
100DH	Proportional control offset error value, when Ti = 0	0 ~ 100%, unit is 0.1%
100EH	The setting of COEF when Dual Loop output control are used	0.01 ~ 99.99
100FH	The setting of Dead band when Dual Loop output control are used	-999 ~ 9,999
1010H	Hysteresis setting value of the 1st output group	0 ~ 9,999
1011H	Hysteresis setting value of the 2nd output group	0 ~ 9,999
1012H	Output value read and write of Output 1	Unit is 0.1%, write operation is valid under manual tuning mode only.
1013H	Output value read and write of Output 2	Unit is 0.1%, write operation is valid under manual tuning mode only.
1014H	Upper-limit regulation of analog linear output	1 Unit = 2.8uA (Current Output) = 1.3mV (Linear Voltage Output)
1015H	Lower-limit regulation of analog linear output	1 Unit = 2.8uA (Current Output) = 1.3mV (Linear Voltage Output)
1016H	Temperature regulation value	-999 ~ +999, unit: 0.1
1017H	Analog decimal setting	0 ~ 3
1018H	Time for valve from full open to full close	0.1 ~ 999.9
1019H	Dead Band setting of valve	0 ~ 100%; unit: 0.1%
101AH	Upper-limit of feedback signal set by valve	0 ~ 1,024
101BH	Lower-limit of feedback signal set by valve	0 ~ 1,024
101CH	PID parameter selection	0 ~ 4
101DH	SV value corresponded to PID value	Only valid within available range, unit: 0.1 scale
1020H	Alarm 1 type	Please refer to the contents of the “Alarm Outputs” for detail
1021H	Alarm 2 type	Please refer to the contents of the “Alarm Outputs” for detail
1022H	Alarm 3 type	Please refer to the contents of the “Alarm Outputs” for detail
1023H	System alarm setting	0 : None (default), 1~3 : Set Alarm 1 to Alarm 3
1024H	Upper-limit alarm 1	Please refer to the contents of the “Alarm Outputs” for detail
1025H	Lower-limit alarm 1	Please refer to the contents of the “Alarm Outputs” for detail
1026H	Upper-limit alarm 2	Please refer to the contents of the “Alarm Outputs” for detail
1027H	Lower-limit alarm 2	Please refer to the contents of the “Alarm Outputs” for detail
1028H	Upper-limit alarm 3	Please refer to the contents of the “Alarm Outputs” for detail
1029H	Lower-limit alarm 3	Please refer to the contents of the “Alarm Outputs” for detail
102AH	Read LED status	b0 : Alm3, b1: Alm2, b2: F, b3: ℃, b4: Alm1, b5: OUT2, b6: OUT1, b7: AT
102BH	Read pushbutton status	b0 : Set, b1 : Select, b2 : Up, b3 : Down. 0 is to push
102CH	Setting lock status	0 : Normal, 1 : All setting lock, 11 : Lock others than SV value
102DH	CT read value	Unit: 0.1A
102FH	Software version	V1.00 indicates 0x100

Address	Content	Explanation
1030H	Start pattern number	0 ~ 7
1032H	Read program Step time left (second)	
1033H	Read program Step time left (minute)	
1034H	Read present executing program step number	
1035H	Read present executing program pattern number	
1036H	Read program dynamic set value	
1040H~ 1047H	Actual step number setting inside the correspond pattern	0 ~ 7 = N, indicate that this pattern is executed from step 0 to step N
1050H~ 1057H	Cycle number for repeating the execution of the correspond pattern	0 ~ 99 indicate that this pattern has been executed for 1 ~ 100 times
1060H~ 1067H	Link pattern number setting of the correspond pattern	0 ~ 8, 8 indicates the program end. 0~7 indicates the next execution pattern number after executing the current pattern
2000H~ 203FH	Pattern 0~7 temperature set point setting Pattern 0 temperature is set to 2000H ~ 2007H	-999 ~ 9,999
2080H~ 20BFH	Pattern 0~7 execution time setting Pattern 0 time is set to 2080H~2087H	Time 0 ~ 900 (1 minute per scale)

6. Address and Content of Bit Register: (First bit of reading will put into LSB, Write data = FF00H for bit set, 0000H for bit clear)

Address	Content	Explanation
0800H	Read AT LED status	0:OFF; 1: ON
0801H	Read Output 1 LED status	0: OFF; 1:ON
0802H	Read Output 2 LED status	0:OFF; 1: ON
0803H	Read Alarm 1 LED status	0: OFF; 1:ON
0804H	Read °F LED status	0: OFF; 1: ON
0805H	Read °C LED status	0: OFF; 1: ON
0806H	Read Alarm 2 LED status	0: OFF; 1: ON
0807H	Read Alarm 3 LED status	0: OFF; 1: ON
0808H	Read SET key status	0: Press down
0809H	Read FUNCTION key status	0: Press down
080AH	Read UP key status	0: Press down
080BH	Read DOWN key status	0: Press down
080CH	Read Event 1 status	1: Event action
080DH	Read Event 2 status	1: Event action
080EH	Read System Alarm status	1: Alarm action
0810H	Communication write-in selection	Communication write in disabled: 0 (default), Communication write in enabled: 1
0811H	Temperature unit display selection	°C/linear input (default): 1; °F: 0
0812H	Decimal point position selection	Except for the thermocouple B, S, R type, all the other thermocouple type are valid. (0 or 1)
0813H	AT setting	OFF: 0 (default), ON : 1
0814H	Control RUN/STOP setting	0: STOP, 1: RUN (default)
0815H	STOP setting for PID program control	0: RUN (default), 1: STOP
0816H	Temporarily STOP for PID program control	0: RUN (default), 1: Temporarily STOP
0817H	Valve feedback setting status	0: w/o feedback (default), 1: feedback function
0818H	Auto-tuning valve feedback status	0: Stop AT (default), 1: Start AT

7. Communication Transmission Format: Command Code: 02: read N bits, 05: write 1 bit, 03: read N words, 06: write 1 word.

ASCII Mode:

Read command			Read command response			Write command			Write command response		
STX	' : '	' : '	STX	' : '	' : '	STX	' : '	' : '	STX	' : '	' : '
ADR 1	'0'	'0'	ADR 1	'0'	'0'	ADR 1	'0'	'0'	ADR 1	'0'	'0'
ADR 0	'1'	'1'	ADR 0	'1'	'1'	ADR 0	'1'	'1'	ADR 0	'1'	'1'
CMD 1	'0'	'0'	CMD 1	'0'	'0'	CMD 1	'0'	'0'	CMD 1	'0'	'0'
CMD 0	'3'	'2'	CMD 0	'3'	'2'	CMD 0	'6'	'5'	CMD 0	'6'	'5'
Starting data address	'1'	'0'	Number of data (count by byte)	'0'	'0'	Starting data address	'1'	'0'	Starting data address	'1'	'0'
	'0'	'8'		'4'	'2'		'0'	'8'		'0'	'8'
	'0'	'1'	Start address data 1000H/081xH	'0'	'1'		'0'	'1'		'0'	'1'
	'0'	'0'		'1'	'7'		'1'	'0'		'1'	'0'
Number of data (word/Bit)	'0'	'0'		'F'	'0'	Data content	'0'	'F'	Data content	'0'	'F'
	'0'	'0'		'4'	'1'		'3'	'F'		'3'	'F'
	'0'	'0'	Address data 1001H	'0'			'E'	'0'		'E'	'0'
	'2'	'9'		'0'			'8'	'0'		'8'	'0'
LRC 1	'E'	'D'		'0'		LRC1	'F'	'E'	LRC1	'F'	'E'
LRC 0	'A'	'C'		'0'		LRC 0	'D'	'3'	LRC 0	'D'	'3'
END 1	CR	CR	LRC 1	'0'	'E'	END 1	CR	CR	END 1	CR	CR
END 0	LF	LF	LRC 0	'3'	'3'	END 0	LF	LF	END 0	LF	LF
			END 1	CR	CR						
			END 0	LF	LF						

LRC checksum:

LRC check is the added sum from "Address" to "Data content". For example, 01H + 03H + 10+ 00H + 00H + 02H = 16H, then take the complementary of 2, EAH.

RTU Mode:

Read command			Read command response			Write command			Write command response		
ADR	01H	01H	ADR	01H	01H	ADR	01H	01H	ADR	01H	01H
CMD	03H	02H	CMD	03H	02H	CMD	06H	05H	CMD	06H	05H
Starting data address	10H	08H	Number of data (count by byte)	04H	02H	Starting data address	10H	08H	Starting data address	10H	08H
	00H	10H					01H	10H		01H	10H
Number of data (word/Bit)	00H	00H	Start address data 1000H/081xH	01H	17H	Data content	03H	FFH	Data content	03H	FFH
	02H	09H		F4H	01H		20H	00H		20H	00H
CRC 1	C0H	BBH	Address data 1001H	03H		CRC 1	DDH	8FH	CRC 1	DDH	8FH
CRC 0	CBH	A9H		20H		CRC 0	E2H	9FH	CRC 0	E2H	9FH
			CRC 1	BBH	77H						
			CRC 0	15H	88H						

■ Default Communication Response Setting

Write hex value 1234 into register at 472AH and 1234 again into register at 474EH. Re-power DTB to complete the default setting.

■ Mounting

1. Insert the controller through the panel cutout.
2. Insert the mounting bracket into the mounting groove at the top and bottom of the controller
3. Push the mounting bracket forward until the bracket stops at panel wall.
4. Insert and tighten screws on bracket to secure the controller in place. (The screw torque should be 0.8kgf-cm to 1.5kgf-cm)

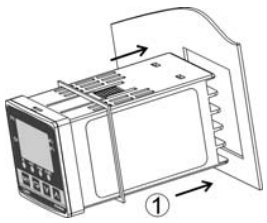

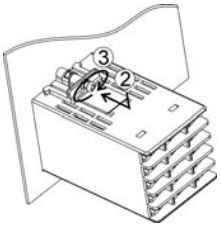

Installing mounting bracket:

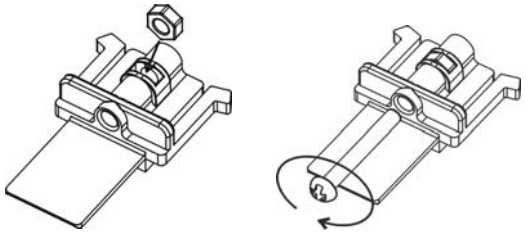

CT Wiring Method (if CT function is selected)

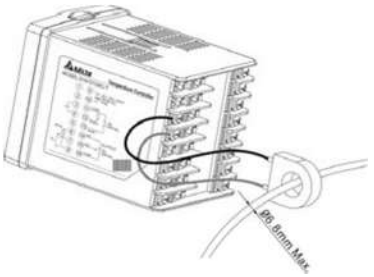

■ Panel Cutout & Terminal Definitions

Panel Cutout

DTB4824

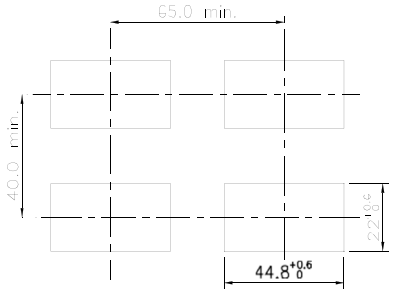

DTB4848

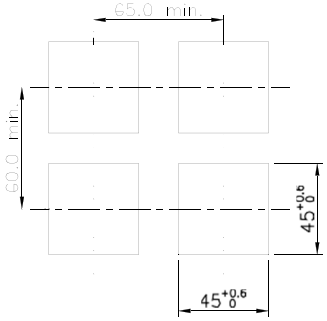

DTB4896

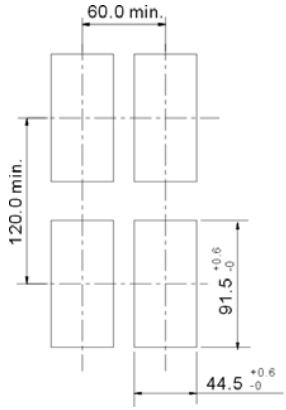

Terminal Definition

DTB4824 DC power supply AC power supply

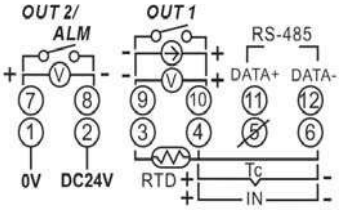

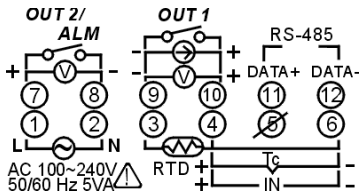

DTB4848

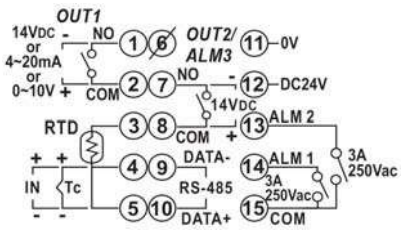

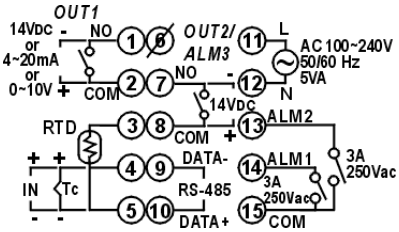

DTB4896/DTB9696

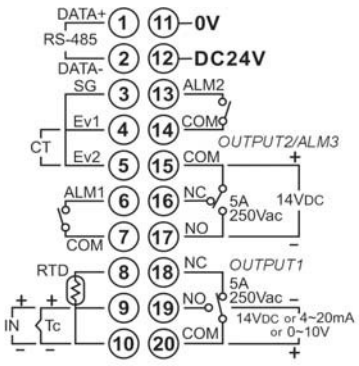

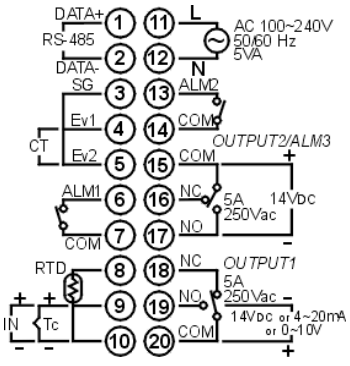

DTB9696

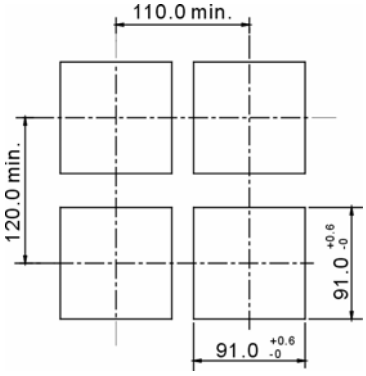

DTB9696RRV

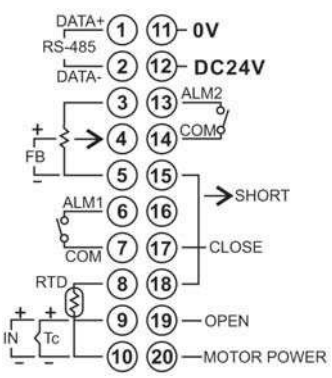

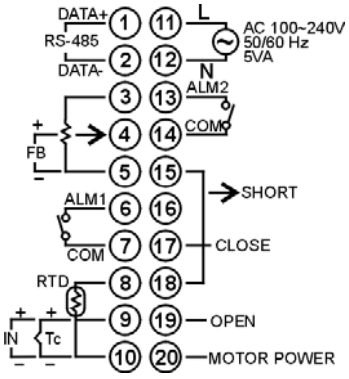

■ Error Acknowledgement & Display

Communication error code response description:

Error Status 102EH / 4750H	PV read back 1000H / 4700H	Error status
0001H	M/A	PV unstable
0002H	8002H	Re-initial, no temperature at this time
0003H	8003H	Input sensor did not connect
0004H	8004H	Input signal error
0005H	N/A	Over input range
0006H	8006H	ADC fail
0007H	N/A	EEPROM read/write error

Display message:

Power ON			Normal display	
PV	b150	DTB series, Firmware V1.50	2000	Present value
SV	urE	Output VR type with Event option	00	Set value
Sensor didn't connect			Input error	
PV	no	No	Err	Error
SV	Cont	Connect	InPt	Input
EEPROM error			Input over range	
PV	Err	Error	2001	PV flash when over
SV	Pron	EEPROM	00	

■ How to Set Up Current Input

For normal input

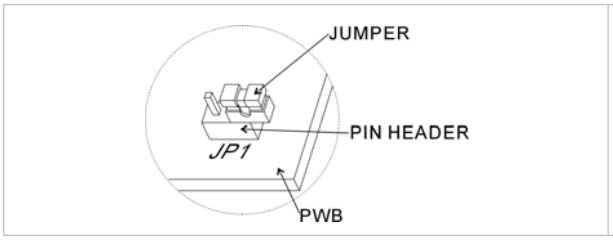

For current input (4 ~ 20mA, 0 ~ 20mA)

