Baumer
Passion for Sensors

Inductive proximity switch

IFRM 18N33T1/PL

Inductive proximity switch - outdoor and washdown

Article number: 11016660

Overview

- 12 mm
- NPN break function (NC)
- cable PUR 3 x 0,25, 2 m
- -40 … 80 °C
- IP 67

Picture similar

Technical data

General data	
Mounting type	Non-flush
Special type	Outdoor design
Nominal sensing distance Sn	12 mm
Hysteresis	2 … 15 % of Sr
Output indicator	LED red
Electrical data	
Switching frequency	500 Hz
Voltage supply range +Vs	6 … 30 VDC
Current consumption max. (no load)	10 mA
Output circuit	NPN break function (NC)
Voltage drop Vd	< 2 VDC
Output current	< 200 mA

Electrical data	
Short circuit protection	Yes
Reverse polarity protection	Yes
Mechanical data	
Type	Cylindrical threaded
Material (sensing face)	PBT
Housing material	Brass nickel plated
Dimension	18 mm
Housing length	50 mm
Connection types	Cable PUR 3 x 0,25, 2 m
Tightening torque max.	40 Nm (Front: 28 Nm)
Ambient conditions	
Operating temperature	-40 … +80 °C
Protection class	IP 67

2022-11-09 The product features and technical data specified do not express or imply any warranty. Technical modifications subject to change.

IFRM 18N33T1/PL

Inductive proximity switch - outdoor and washdown

Article number: 11016660

Dimension drawing

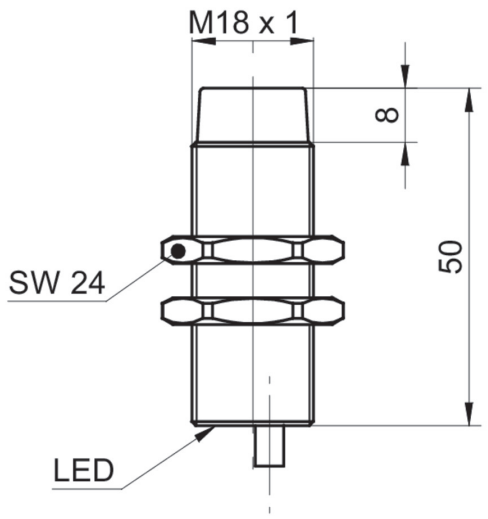

Connection diagram

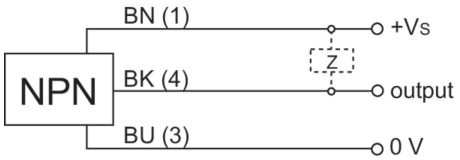

2022-11-09 The product features and technical data specified do not express or imply any warranty. Technical modifications subject to change.