Baumer
Passion for Sensors

Inductive proximity switch

IFRM 05P17A1/S35L

Inductive proximity switch - subminiature

Article number: 11082478

Overview

- 1,6 mm
- PNP make function (NO)
- connector M8
- -25 … 75 °C
- IP 67

Picture similar

Technical data

General data	
Mounting type	Flush
Nominal sensing distance Sn	1.6 mm
Hysteresis	2 … 20 % of Sr
Output indicator	3 port LED red
Electrical data	
Switching frequency	3 kHz
Voltage supply range +Vs	6 … 30 VDC
Current consumption max. (no load)	12 mA
Output circuit	PNP make function (NO)
Voltage drop Vd	< 2 VDC
Output current	< 100 mA

Electrical data	
Short circuit protection	Yes
Reverse polarity protection	Yes
Mechanical data	
Type	Cylindrical threaded
Material (sensing face)	LCP
Housing material	Stainless steel
Dimension	5 mm
Housing length	45 mm
Connection types	Connector M8
Tightening torque max.	2 Nm (Front: 1,4 Nm)
Ambient conditions	
Operating temperature	-25 … +75 °C
Protection class	IP 67

Remarks

- M8 x 1 quick disconnect
- 3 port LED

2022-11-09 The product features and technical data specified do not express or imply any warranty. Technical modifications subject to change.

IFRM 05P17A1/S35L

Inductive proximity switch - subminiature

Article number: 11082478

Dimension drawing

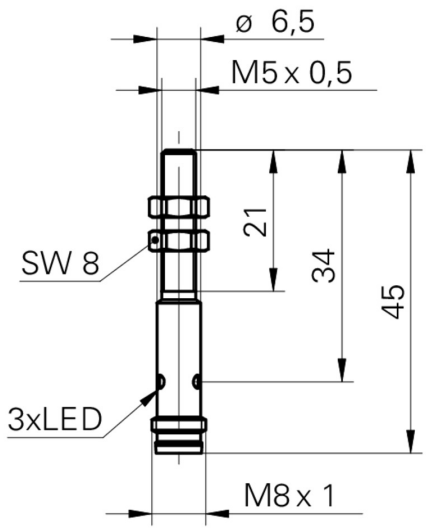

Connection diagram

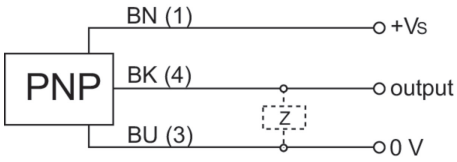

2022-11-09 The product features and technical data specified do not express or imply any warranty. Technical modifications subject to change.