Inductive sensors special versions

IFRD 18N37T3/S14

Inductive sensors special versions - high temperature

Article number: 10150610

Overview

- 6 mm
- NPN break function (NC)
- connector M12
- -25 … 100 °C
- IP 69K

Picture similar

Technical data

General data	
Mounting type	Quasi-flush
Special type	Full metal housing (<kursiv>Duro-Prox</kursiv>) High temperature
Nominal sensing distance Sn	6 mm
Hysteresis	2 … 20 % of Sr
Electrical data	
Switching frequency	100 Hz
Voltage supply range +Vs	10 … 30 VDC
Current consumption max. (no load)	14 mA
Output circuit	NPN break function (NC)
Voltage drop Vd	< 2 VDC

Electrical data	
Output current	< 100 mA
Short circuit protection	Yes
Reverse polarity protection	Yes
Mechanical data	
Type	Cylindrical threaded
Material (sensing face)	Stainless steel 1.4404 (V4A)
Housing material	Stainless steel 1.4404 (V4A)
Operating pressure static	< 20 bar
Dimension	18 mm
Housing length	60 mm
Connection types	Connector M12
Ambient conditions	
Operating temperature	-25 … +100 °C
Protection class	IP 69K

Remarks

- Higher noise immunity (EMC), (EN 61000-6-2)

2022-11-10 The product features and technical data specified do not express or imply any warranty. Technical modifications subject to change.

IFRD 18N37T3/S14

Inductive sensors special versions - high temperature

Article number: 10150610

Dimension drawing

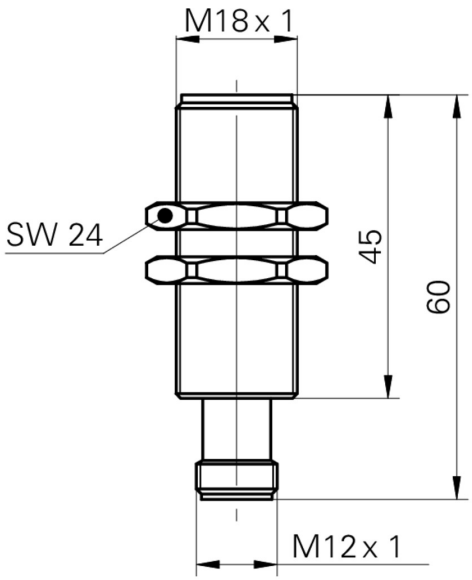

Connection diagram

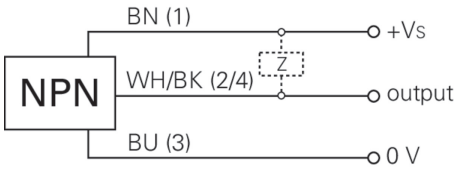

2022-11-10 The product features and technical data specified do not express or imply any warranty. Technical modifications subject to change.